TO-252 Package Dimensions

FAIRCHILD SEMICONDUCTOR™

TO-252 (FS PKG Code 36)

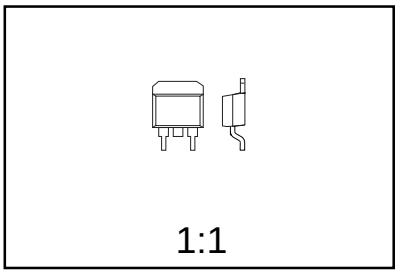

Scale 1:1 on letter size paper

Dimensions shown below are in:
inches [millimeters]

Part Weight per unit (gram): 0.300

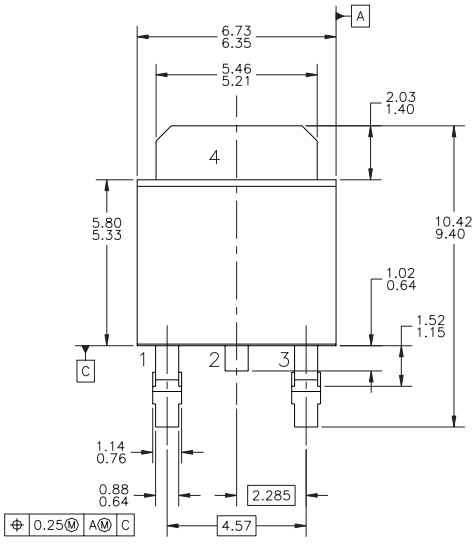

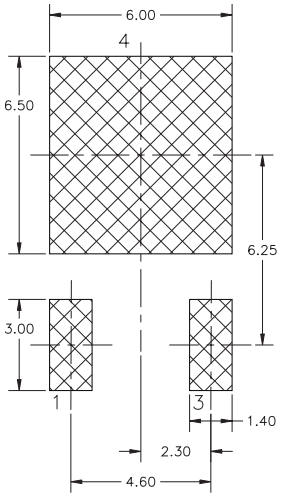

LAND PATTERN RECOMMENDATION

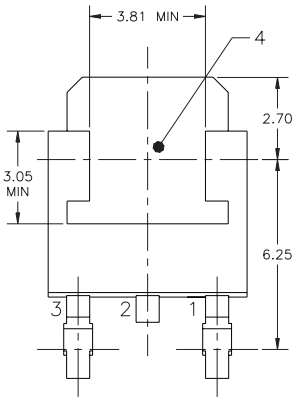

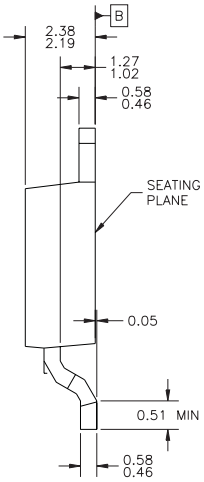

NOTES: UNLESS OTHERWISE SPECIFIED

A) ALL DIMENSIONS ARE IN MILLIMETERS.

B) THIS PACKAGE CONFORMS TO JEDEC, TO-252, ISSUE B, VARIATION AB, ITEM 10.268, DATED SEPTEMBER 1988.

©2000 Fairchild Semiconductor International