EC 19 ∅19 mm, brushless, 120 Watt

NEW

High Power, sterilizable

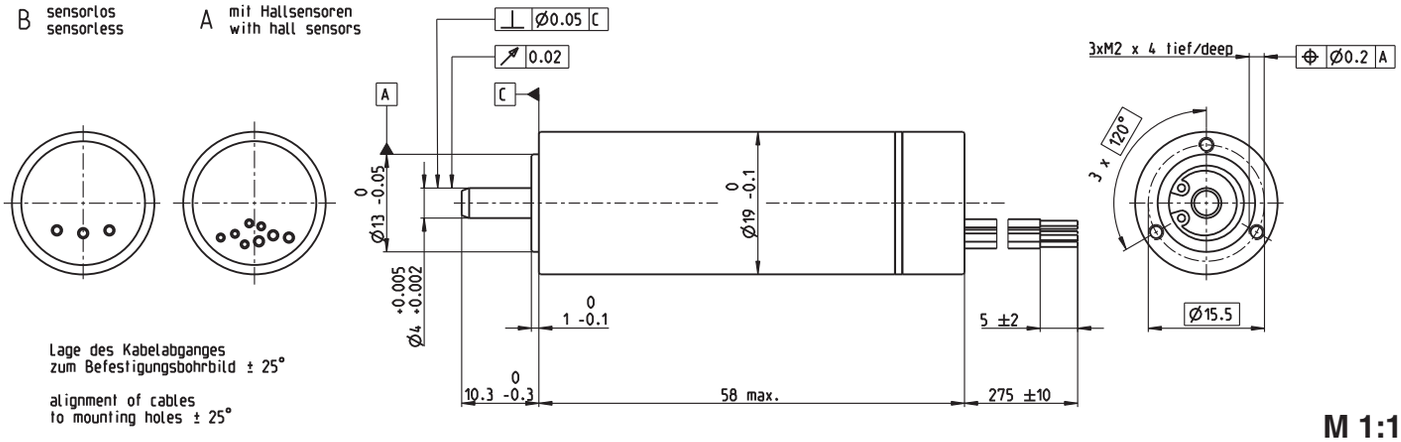

M 1:1

Stock program
Standard program
Special program (on request)

Part Numbers

A with Hall sensors	475521	475522	467168
B sensorless	475525	475526	474493

Motor Data (provisional)

	Values at nominal voltage			
1	Nominal voltage	V	24	30	36
2	No load speed	rpm	62200	60500	54400
3	No load current	mA	272	208	147
4	Nominal speed	rpm	59400	57700	51700
5	Nominal torque (max. continuous torque)	mNm	22.5	24	24.5
6	Nominal current (max. continuous current)	A	6.35	5.24	3.99
7	Stall torque	mNm	593	646	578
8	Starting current	A	161	137	91.6
9	Max. efficiency	%	92	92.4	92.2
	Characteristics				
10	Terminal resistance phase to phase	Ω	0.149	0.22	0.393
11	Terminal inductance phase to phase	mH	0.0103	0.017	0.0302
12	Torque constant	mNm/A	3.68	4.73	6.31
13	Speed constant	rpm/V	2600	2020	1510
14	Speed/torque gradient	rpm/mNm	105	93.8	94.4
15	Mechanical time constant	ms	1.99	1.78	1.79
16	Rotor inertia	gcm²	1.81	1.81	1.81

Specifications

	Thermal data	
17	Thermal resistance housing-ambient	10.7 K/W
18	Thermal resistance winding-housing	0.808 K/W
19	Thermal time constant winding	2.46 s
20	Thermal time constant motor	437 s
21	Ambient temperature	-40…+135°C
22	Max. permissible winding temperature	155°C
	Mechanical data (preloaded ball bearings)	
23	Max. permissible speed	100000 rpm
24	Axial play at axial load < 3 N	0 mm
	> 3 N	max. 0.14 mm
25	Radial play	preloaded
26	Max. axial load (dynamic)	3 N
27	Max. force for press fits (static)	22 N
	(static, shaft supported)	1410 N
28	Max. radial load, 5 mm from flange	12 N
	Other specifications	
29	Number of pole pairs	1
30	Number of phases	3
31	Weight of motor	82 g

Values listed in the table are nominal.

Connection A and B, motor (Cable AWG 22)
red — Motor winding 1
black — Motor winding 2
white — Motor winding 3
Connection A, sensors (Cable AWG 26)
green — VHall 3…24 VDC
blue — GND
red/grey — Hall sensor 1
black/grey — Hall sensor 2
white/grey — Hall sensor 3
Wiring diagram for Hall sensors see p. 33

Operating Range

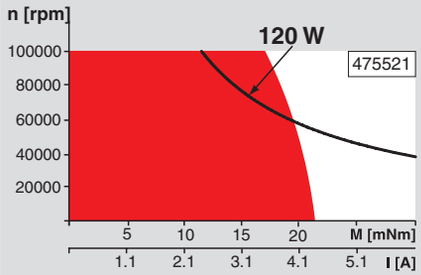

Comments

Continuous operation
In observation of above listed thermal resistance (lines 17 and 18) the maximum permissible winding temperature will be reached during continuous operation at 25°C ambient.
= Thermal limit.

Short term operation
The motor may be briefly overloaded (recurring).

Assigned power rating

Application

135°C

Sterilizable Devices

Orthopedic Drills & Saws
Surgical Reamers
Arthroscopic Shavers
Surgical Staplers
Dental Tools

Sterilization information

Tested for 1000 sterilization cycles in an autoclave.
No need to dismantle.

Sterilization with steam	
Temperature	+134°C ± 4°C
Compression pressure up to	2.3 bar
Rel. humidity	100 %
Cycle length	18 minutes

maxon modular system

Overview on page 20–25

Planetary Gearhead
sterilizable
∅19 mm
0.5 - 2.0 Nm
Page 268

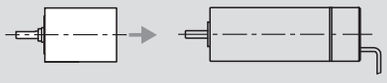

Recommended Electronics:

ESCON 36/3 EC	Page 342
ESCON Mod. 50/4 EC-S	343
ESCON Module 50/5	343
ESCON 50/5	344
ESCON 70/10	344
DEC Module 24/2, 50/5	346
Notes	**24**