EC 45 flat ∅45 mm, brushless, 70 Watt

NEW

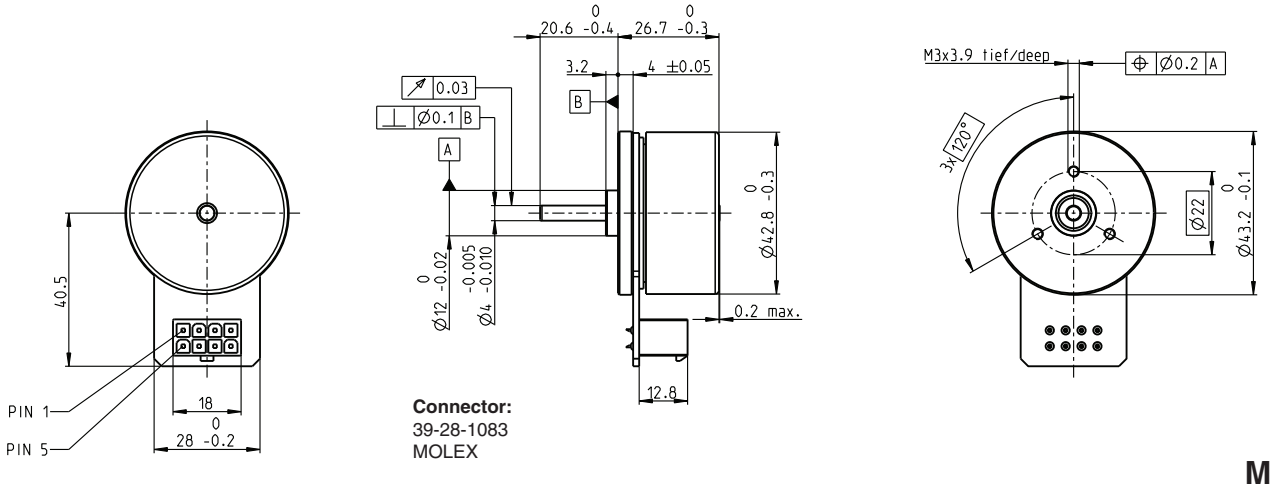

Connector:
39-28-1083
MOLEX

M 1:2

Stock program
Standard program
Special program (on request)

Order Number

with Hall sensors		397172	402685	402686	402687
Motor Data (provisional)					
Values at nominal voltage					
1 Nominal voltage	V	24	30	36	48
2 No load speed	rpm	6110	6230	6330	3440
3 No load current	mA	234	194	166	48.1
4 Nominal speed	rpm	4840	4970	5060	2540
5 Nominal torque (max. continuous torque)	mNm	130	114	110	134
6 Nominal current (max. continuous current)	A	3.26	2.4	1.96	0.935
7 Stall torque	mNm	820	783	773	738
8 Starting current	A	39.5	25.8	20.7	6.97
9 Max. efficiency	%	85	84	83	84
Characteristics					
10 Terminal resistance phase to phase	Ω	0.608	1.16	1.74	6.89
11 Terminal inductance phase to phase	mH	0.463	0.691	0.966	5.85
12 Torque constant	mNm / A	36.9	45.1	53.3	131
13 Speed constant	rpm / V	259	212	179	72.7
14 Speed / torque gradient	rpm / mNm	4.26	5.44	5.85	3.82
15 Mechanical time constant	ms	8.07	10.3	11.1	7.24
16 Rotor inertia	gcm^2	181	181	181	181

Specifications

Thermal data

17	Thermal resistance housing-ambient	3.39 K / W
18	Thermal resistance winding-housing	4.0 K / W
19	Thermal time constant winding	28.8 s
20	Thermal time constant motor	157 s
21	Ambient temperature	-40 ... +100°C
22	Max. permissible winding temperature	+125°C

Mechanical data (preloaded ball bearings)

23	Max. permissible speed	10000 rpm
24	Axial play at axial load < 4.0 N	0 mm
	> 4.0 N	0.14 mm
25	Radial play	preloaded
26	Max. axial load (dynamic)	3.8 N
27	Max. force for press fits (static)	50 N
	(static, shaft supported)	1000 N
28	Max. radial loading, 7.5 mm from flange	21 N

Other specifications

29	Number of pole pairs	8
30	Number of phases	3
31	Weight of motor	141 g

Values listed in the table are nominal.

Connection

Pin 1	Hall sensor 1*
Pin 2	Hall sensor 2*
Pin 3	4.5 ... 18 VDC
Pin 4	Motor winding 3
Pin 5	Hall sensor 3*
Pin 6	GND
Pin 7	Motor winding 1
Pin 8	Motor winding 2

*Internal pull-up (7 … 13 kΩ) on pin 3
Wiring diagram for Hall sensors see p. 29

Cable

Connection cable Universal, L = 500 mm	**339380**
Connection cable to EPOS, L = 500 mm	**354045**

Operating Range

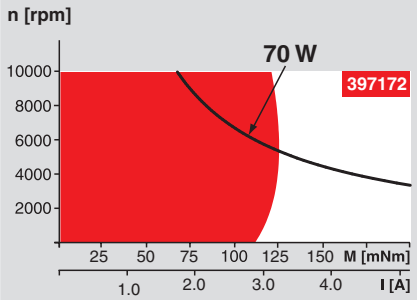

Comments

Continuous operation
In observation of above listed thermal resistance (lines 17 and 18) the maximum permissible winding temperature will be reached during continuous operation at 25°C ambient.
= Thermal limit.

Short term operation
The motor may be briefly overloaded (recurring).

Assigned power rating

maxon Modular System

Overview on page 16 - 21

Planetary Gearhead
∅42 mm
3 - 15 Nm
Page 237

Spur Gearhead
∅45 mm
0.5 - 2.0 Nm
Page 239

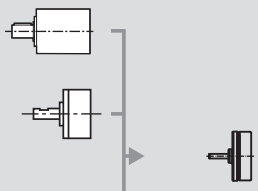

Recommended Electronics:

DECS 50/5	Page 289
DEC 24/3	290
DEC 50/5	291
DEC Module 50/5	291
DECV 50/5	297
EPOS2 Module 36/2	304
EPOS2 24/5	305
EPOS2 P 24/5	308
Notes	**20**

Option
With Cable and Connector
(Ambient temperature -20 ... +100°C)