International
IOR Rectifier

SMPS MOSFET

PD - 94384A

IRFPS40N60K

HEXFET® Power MOSFET

V_{DSS}	$R_{DS(on)}$ typ.	I_D
600V	0.110 Ω	40A

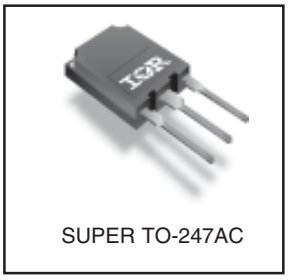

SUPER TO-247AC

Applications

- Hard Switching Primary or PFC Switch
- Switch Mode Power Supply (SMPS)
- Uninterruptible Power Supply
- High Speed Power Switching
- Motor Drive

Benefits

- Low Gate Charge Qg results in Simple Drive Requirement
- Improved Gate, Avalanche and Dynamic dv/dt Ruggedness
- Fully Characterized Capacitance and Avalanche Voltage and Current
- Enhanced Body Diode dv/dt Capability

Absolute Maximum Ratings

	Parameter	Max.	Units
I_D @ T_C = 25°C	Continuous Drain Current, V_{GS} @ 10V	40	A
I_D @ T_C = 100°C	Continuous Drain Current, V_{GS} @ 10V	24	
I_{DM}	Pulsed Drain Current ①	160	
P_D @T_C = 25°C	Power Dissipation	570	W
	Linear Derating Factor	4.5	W/°C
V_{GS}	Gate-to-Source Voltage	± 30	V
dv/dt	Peak Diode Recovery dv/dt ③	7.5	V/ns
T_J T_{STG}	Operating Junction and Storage Temperature Range	-55 to + 150	°C
	Soldering Temperature, for 10 seconds (1.6mm from case)	300	

Avalanche Characteristics

Symbol	Parameter	Typ.	Max.	Units
E_{AS}	Single Pulse Avalanche Energy②	—	600	mJ
I_{AR}	Avalanche Current①	—	40	A
E_{AR}	Repetitive Avalanche Energy①	—	57	mJ

Thermal Resistance

Symbol	Parameter	Typ.	Max.	Units
$R_{\theta JC}$	Junction-to-Case⑥	—	0.22	°C/W
$R_{\theta CS}$	Case-to-Sink, Flat, Greased Surface	0.24	—	
$R_{\theta JA}$	Junction-to-Ambient⑥	—	40	

10/20/04

Static @ T_J = 25°C (unless otherwise specified)

Symbol	Parameter	Min.	Typ.	Max.	Units	Conditions
$V_{(BR)DSS}$	Drain-to-Source Breakdown Voltage	600	—	—	V	V_{GS} = 0V, I_D = 250µA
$\Delta V_{(BR)DSS}/\Delta T_J$	Breakdown Voltage Temp. Coefficient	—	0.63	—	V/°C	Reference to 25°C, I_D = 1mA⑥
$R_{DS(on)}$	Static Drain-to-Source On-Resistance	—	0.110	0.130	Ω	V_{GS} = 10V, I_D = 24A ④
$V_{GS(th)}$	Gate Threshold Voltage	3.0	—	5.0	V	V_{DS} = V_{GS}, I_D = 250µA
I_{DSS}	Drain-to-Source Leakage Current	—	—	50	µA	V_{DS} = 600V, V_{GS} = 0V
		—	—	250		V_{DS} = 480V, V_{GS} = 0V, T_J = 125°C
I_{GSS}	Gate-to-Source Forward Leakage	—	—	100	nA	V_{GS} = 30V
	Gate-to-Source Reverse Leakage	—	—	-100		V_{GS} = -30V

Dynamic @ T_J = 25°C (unless otherwise specified)

Symbol	Parameter	Min.	Typ.	Max.	Units	Conditions
g_{fs}	Forward Transconductance	21	—	—	S	V_{DS} = 50V, I_D = 24A
Q_g	Total Gate Charge	—	—	330	nC	I_D = 38A
Q_{gs}	Gate-to-Source Charge	—	—	84		V_{DS} = 480V
Q_{gd}	Gate-to-Drain ("Miller") Charge	—	—	150		V_{GS} = 10V, See Fig. 6 and 13 ④
$t_{d(on)}$	Turn-On Delay Time	—	47	—	ns	V_{DD} = 300V
t_r	Rise Time	—	110	—		I_D = 38A
$t_{d(off)}$	Turn-Off Delay Time	—	97	—		R_G = 4.3Ω
t_f	Fall Time	—	60	—		V_{GS} = 10V,See Fig. 10 ④
C_{iss}	Input Capacitance	—	7970	—	pF	V_{GS} = 0V
C_{oss}	Output Capacitance	—	750	—		V_{DS} = 25V
C_{rss}	Reverse Transfer Capacitance	—	75	—		f = 1.0MHz, See Fig. 5
C_{oss}	Output Capacitance	—	9440	—		V_{GS} = 0V, V_{DS} = 1.0V, f = 1.0MHz
C_{oss}	Output Capacitance	—	200	—		V_{GS} = 0V, V_{DS} = 480V, f = 1.0MHz
C_{oss} eff.	Effective Output Capacitance	—	260	—		V_{GS} = 0V, V_{DS} = 0V to 480V ⑤

Diode Characteristics

Symbol	Parameter	Min.	Typ.	Max.	Units	Conditions
I_S	Continuous Source Current (Body Diode)	—	—	40	A	MOSFET symbol showing the integral reverse p-n junction diode. 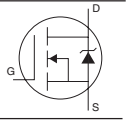
I_{SM}	Pulsed Source Current (Body Diode) ①	—	—	160		
V_{SD}	Diode Forward Voltage	—	—	1.5	V	T_J = 25°C, I_S = 38A, V_{GS} = 0V ④
t_{rr}	Reverse Recovery Time	—	630	950	ns	T_J = 25°C I_F = 38A
		—	730	1090		T_J = 125°C di/dt = 100A/µs ④
Q_{rr}	Reverse Recovery Charge	—	14	20	µC	T_J = 25°C
		—	17	25		T_J = 125°C
I_{RRM}	Reverse Recovery Current	—	39	58	A	T_J = 25°C
t_{on}	Forward Turn-On Time	Intrinsic turn-on time is negligible (turn-on is dominated by L_S+L_D)				

Notes:

① Repetitive rating; pulse width limited by max. junction temperature.(See Fig. 11)

② Starting T_J = 25°C, L = 0.84mH, R_G = 25Ω, I_{AS} = 38A, (See Figure 12a)

③ I_{SD} ≤ 38A, di/dt ≤ 224A/µs, V_{DD} ≤ $V_{(BR)DSS}$, T_J ≤ 150°C

④ Pulse width ≤ 300µs; duty cycle ≤ 2%.

⑤ C_{oss} eff. is a fixed capacitance that gives the same charging time as C_{oss} while V_{DS} is rising from 0 to 80% V_{DSS}

⑥ R_θ is measured at T_J approximately 90°C

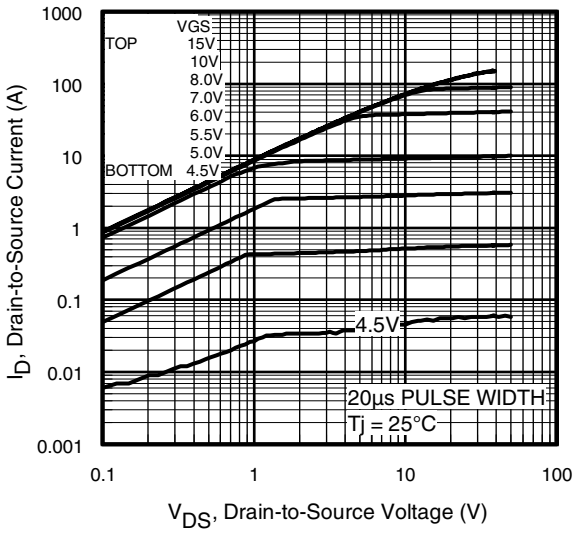

Fig 1. Typical Output Characteristics

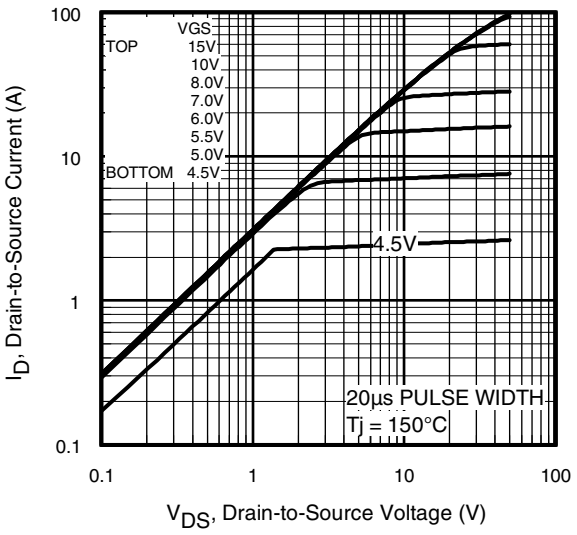

Fig 2. Typical Output Characteristics

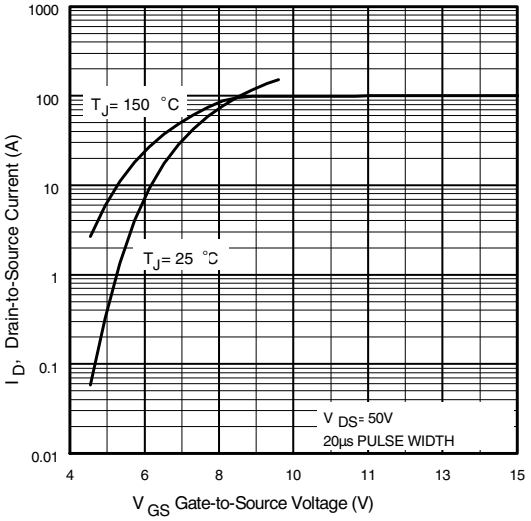

Fig 3. Typical Transfer Characteristics

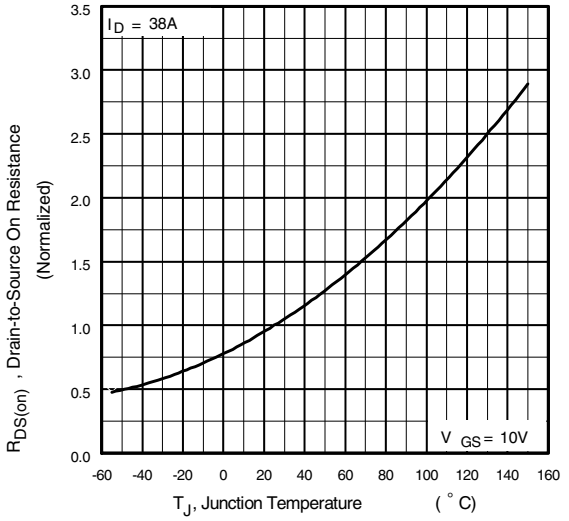

Fig 4. Normalized On-Resistance Vs. Temperature

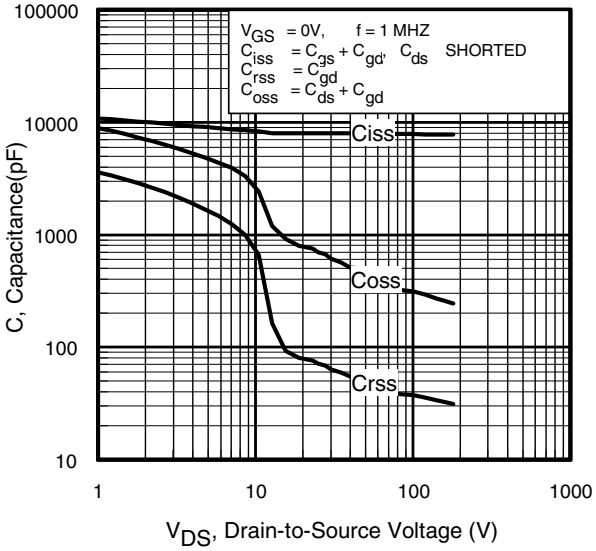

Fig 5. Typical Capacitance Vs. Drain-to-Source Voltage

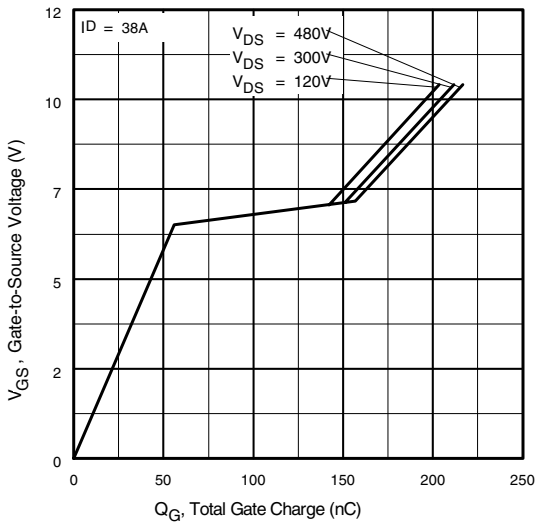

Fig 6. Typical Gate Charge Vs. Gate-to-Source Voltage

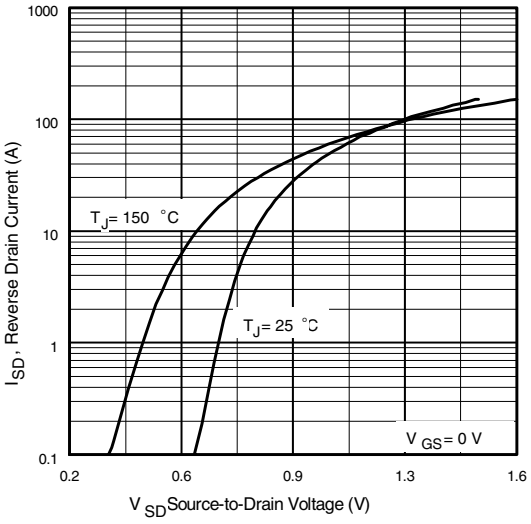

Fig 7. Typical Source-Drain Diode Forward Voltage

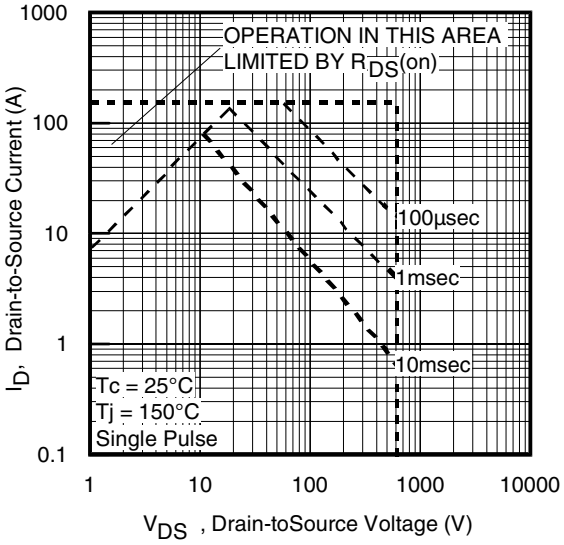

Fig 8. Maximum Safe Operating Area

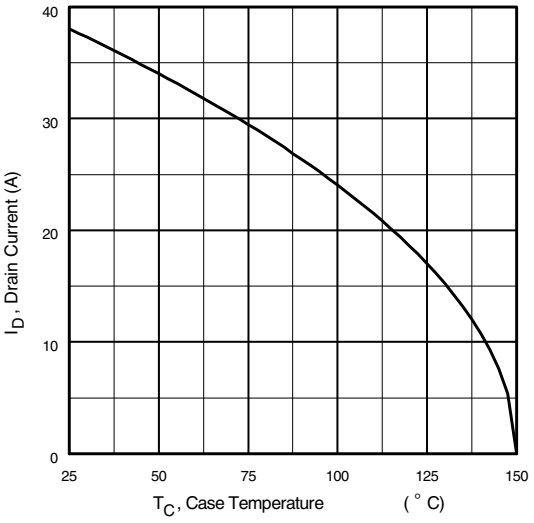

Fig 9. Maximum Drain Current Vs. Case Temperature

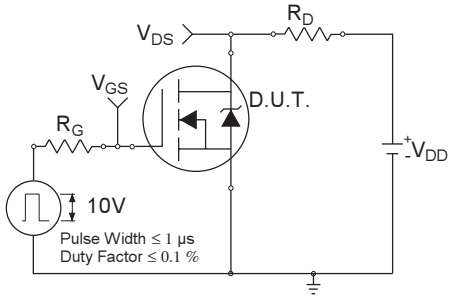

Fig 10a. Switching Time Test Circuit

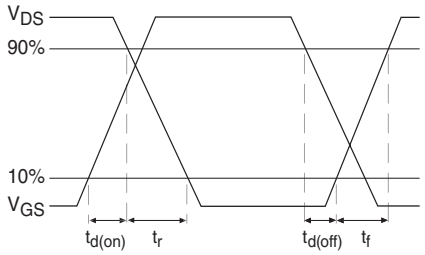

Fig 10b. Switching Time Waveforms

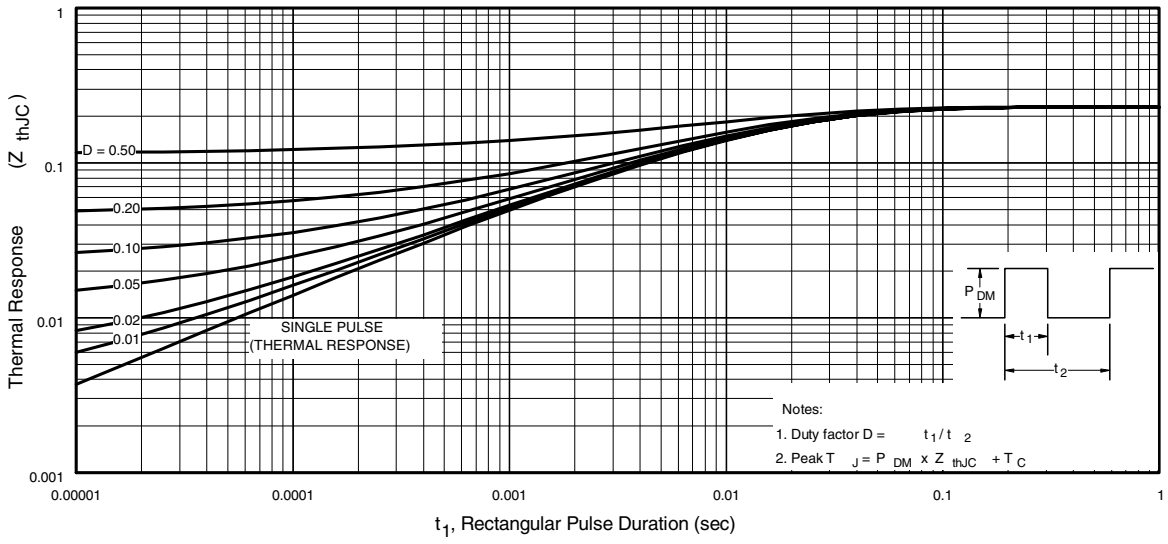

Fig 11. Maximum Effective Transient Thermal Impedance, Junction-to-Case

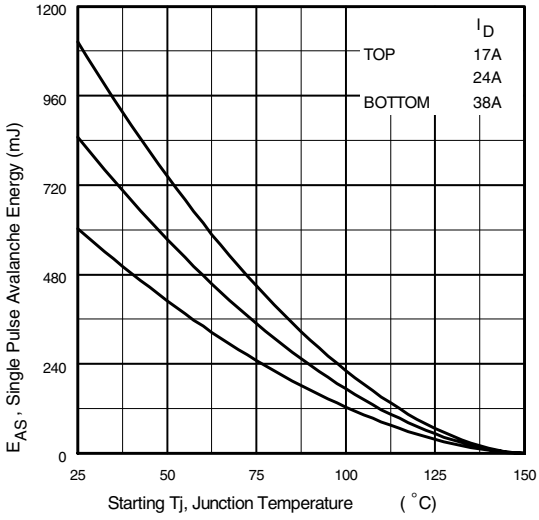

Fig 12a. Maximum Avalanche Energy Vs. Drain Current

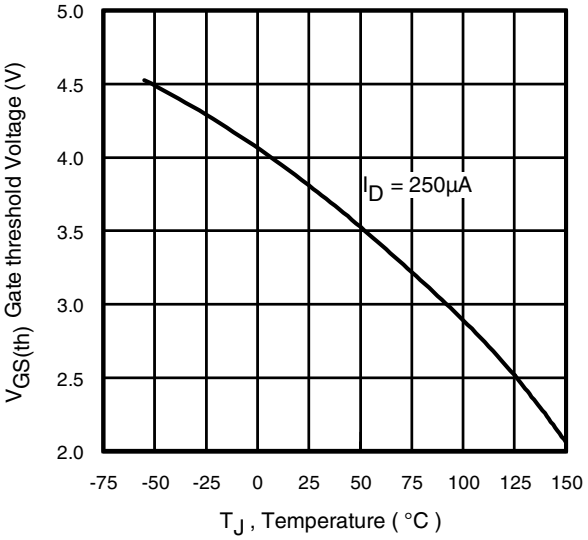

Fig 14. Threshold Voltage Vs. Temperature

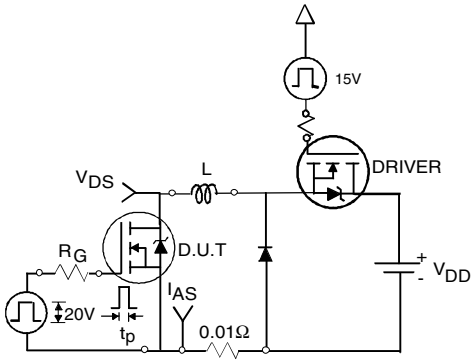

Fig 12b. Unclamped Inductive Test Circuit

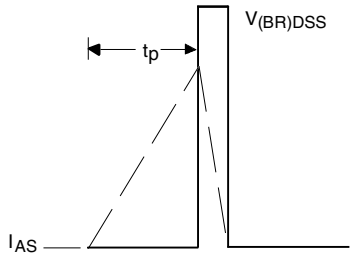

Fig 12c. Unclamped Inductive Waveforms

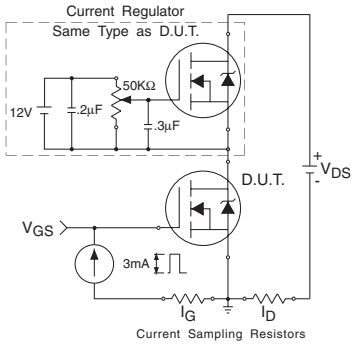

Fig 13a. Gate Charge Test Circuit

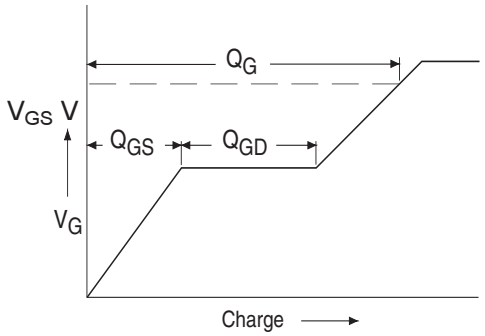

Fig 13b. Basic Gate Charge Waveform

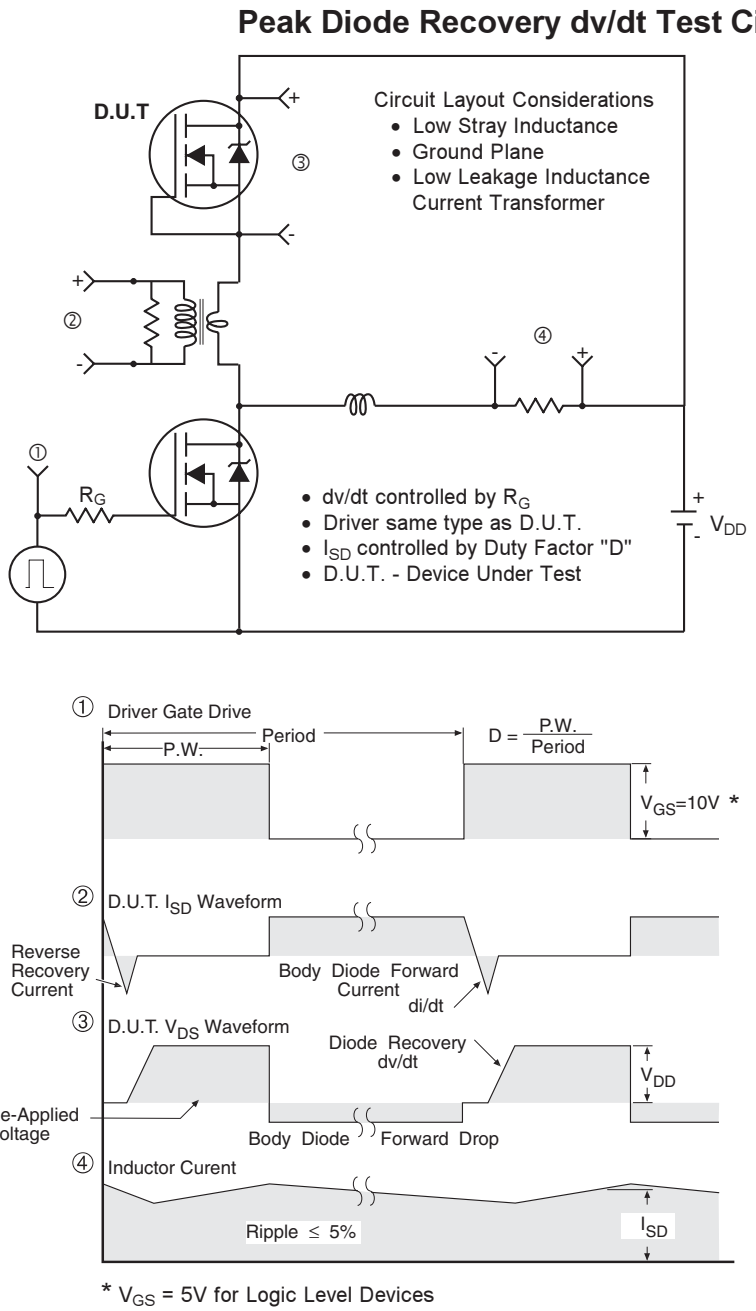

Fig 14. For N-Channel HEXFET® Power MOSFETs

SUPER TO-247AC Package Outline

Dimensions are shown in millimeters (inches)

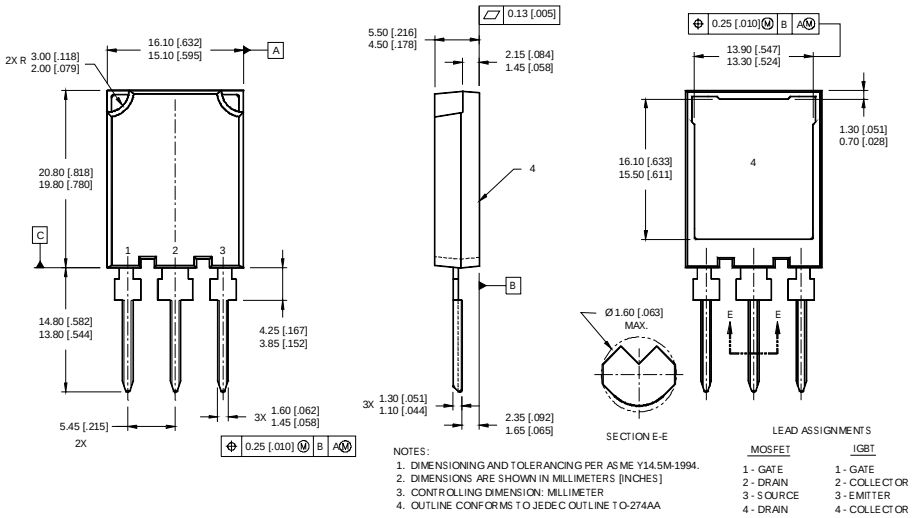

NOTES:
1. DIMENSIONING AND TOLERANCING PER ASME Y14.5M-1994.
2. DIMENSIONS ARE SHOWN IN MILLIMETERS [INCHES].
3. CONTROLLING DIMENSION: MILLIMETER
4. OUTLINE CONFORMS TO JEDEC OUTLINE TO-274AA

Super-247™ Part Marking Information

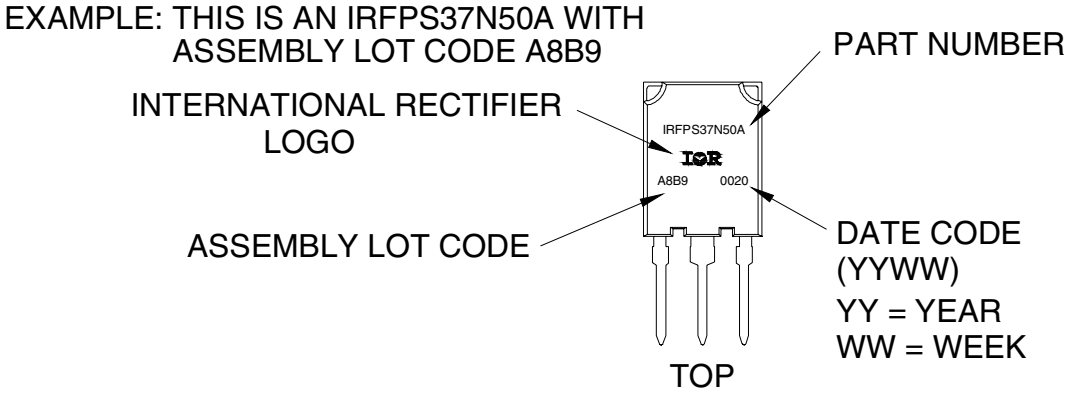

Data and specifications subject to change without notice.
This product has been designed and qualified for the Industrial market.
Qualification Standards can be found on IR's Web site.

International
IOR Rectifier

IR WORLD HEADQUARTERS: 233 Kansas St., El Segundo, California 90245, USA Tel: (310) 252-7105
TAC Fax: (310) 252-7903

10/04

Notice

The products described herein were acquired by Vishay Intertechnology, Inc., as part of its acquisition of International Rectifier's Power Control Systems (PCS) business, which closed in April 2007. Specifications of the products displayed herein are pending review by Vishay and are subject to the terms and conditions shown below.

Specifications of the products displayed herein are subject to change without notice. Vishay Intertechnology, Inc., or anyone on its behalf, assumes no responsibility or liability for any errors or inaccuracies.

Information contained herein is intended to provide a product description only. No license, express or implied, by estoppel or otherwise, to any intellectual property rights is granted by this document. Except as provided in Vishay's terms and conditions of sale for such products, Vishay assumes no liability whatsoever, and disclaims any express or implied warranty, relating to sale and/or use of Vishay products including liability or warranties relating to fitness for a particular purpose, merchantability, or infringement of any patent, copyright, or other intellectual property right.

The products shown herein are not designed for use in medical, life-saving, or life-sustaining applications. Customers using or selling these products for use in such applications do so at their own risk and agree to fully indemnify Vishay for any damages resulting from such improper use or sale.

International Rectifier®, IR®, the IR logo, HEXFET®, HEXSense®, HEXDIP®, DOL®, INTERO®, and POWIRTRAIN® are registered trademarks of International Rectifier Corporation in the U.S. and other countries. All other product names noted herein may be trademarks of their respective owners.