PD- 94829

International
IOR Rectifier

**SMPS MOSFET**

# IRF840APbF

HEXFET® Power MOSFET

| $V_{DSS}$ | Rds(on) max | $I_D$ |
|---|---|---|
| **500V** | **0.85Ω** | **8.0A** |

### Applications

- Switch Mode Power Supply ( SMPS )
- Uninterruptable Power Supply
- High speed power switching
- Lead-Free

### Benefits

- Low Gate Charge Qg results in Simple Drive Requirement
- Improved Gate, Avalanche and dynamic dv/dt Ruggedness
- Fully Characterized Capacitance and Avalanche Voltage and Current
- Effective Coss Specified (See AN1001)

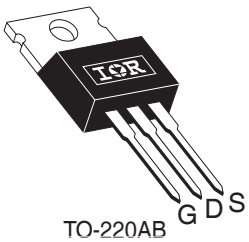

TO-220AB

### Absolute Maximum Ratings

| | Parameter | Max. | Units |
|---|---|---|---|
| $I_D$ @ $T_C$ = 25°C | Continuous Drain Current, $V_{GS}$ @ 10V | 8.0 | A |
| $I_D$ @ $T_C$ = 100°C | Continuous Drain Current, $V_{GS}$ @ 10V | 5.1 | |
| $I_{DM}$ | Pulsed Drain Current ① | 32 | |
| $P_D$ @$T_C$ = 25°C | Power Dissipation | 125 | W |
| | Linear Derating Factor | 1.0 | W/°C |
| $V_{GS}$ | Gate-to-Source Voltage | ± 30 | V |
| dv/dt | Peak Diode Recovery dv/dt ③ | 5.0 | V/ns |
| $T_J$<br>$T_{STG}$ | Operating Junction and<br>Storage Temperature Range | -55 to + 150 | °C |
| | Soldering Temperature, for 10 seconds | 300 (1.6mm from case ) | |
| | Mounting torqe, 6-32 or M3 screw | 10 lbf•in (1.1N•m) | |

### Typical SMPS Topologies:

- Two Transistor Forward
- Haft Bridge
- Full Bridge

11/11/03

## Static @ $T_J$ = 25°C (unless otherwise specified)

| | Parameter | Min. | Typ. | Max. | Units | Conditions |
|---|---|---|---|---|---|---|
| $V_{(BR)DSS}$ | Drain-to-Source Breakdown Voltage | 500 | —— | —— | V | $V_{GS}$ = 0V, $I_D$ = 250μA |
| $\Delta V_{(BR)DSS}/\Delta T_J$ | Breakdown Voltage Temp. Coefficient | —— | 0.58 | —— | V/°C | Reference to 25°C, $I_D$ = 1mA |
| $R_{DS(on)}$ | Static Drain-to-Source On-Resistance | —— | —— | 0.85 | Ω | $V_{GS}$ = 10V, $I_D$ = 4.8A ④ |
| $V_{GS(th)}$ | Gate Threshold Voltage | 2.0 | —— | 4.0 | V | $V_{DS}$ = $V_{GS}$, $I_D$ = 250μA |
| $I_{DSS}$ | Drain-to-Source Leakage Current | —— | —— | 25 | μA | $V_{DS}$ = 500V, $V_{GS}$ = 0V |
| | | —— | —— | 250 | | $V_{DS}$ = 400V, $V_{GS}$ = 0V, $T_J$ = 125°C |
| $I_{GSS}$ | Gate-to-Source Forward Leakage | —— | —— | 100 | nA | $V_{GS}$ = 30V |
| | Gate-to-Source Reverse Leakage | —— | —— | -100 | | $V_{GS}$ = -30V |

## Dynamic @ $T_J$ = 25°C (unless otherwise specified)

| | Parameter | Min. | Typ. | Max. | Units | Conditions |
|---|---|---|---|---|---|---|
| $g_{fs}$ | Forward Transconductance | 3.7 | —— | —— | S | $V_{DS}$ = 50V, $I_D$ = 4.8A |
| $Q_g$ | Total Gate Charge | —— | —— | 38 | nC | $I_D$ = 8.0A |
| $Q_{gs}$ | Gate-to-Source Charge | —— | —— | 9.0 | | $V_{DS}$ = 400V |
| $Q_{gd}$ | Gate-to-Drain ("Miller") Charge | —— | —— | 18 | | $V_{GS}$ = 10V, See Fig. 6 and 13 ④ |
| $t_{d(on)}$ | Turn-On Delay Time | —— | 11 | —— | ns | $V_{DD}$ = 250V |
| $t_r$ | Rise Time | —— | 23 | —— | | $I_D$ = 8.0A |
| $t_{d(off)}$ | Turn-Off Delay Time | —— | 26 | —— | | $R_G$ = 9.1Ω |
| $t_f$ | Fall Time | —— | 19 | —— | | $R_D$ = 31Ω,See Fig. 10 ④ |
| $C_{iss}$ | Input Capacitance | —— | 1018 | —— | pF | $V_{GS}$ = 0V |
| $C_{oss}$ | Output Capacitance | —— | 155 | —— | | $V_{DS}$ = 25V |
| $C_{rss}$ | Reverse Transfer Capacitance | —— | 8.0 | —— | | $f$ = 1.0MHz, See Fig. 5 |
| $C_{oss}$ | Output Capacitance | —— | 1490 | —— | | $V_{GS}$ = 0V, $V_{DS}$ = 1.0V, $f$ = 1.0MHz |
| $C_{oss}$ | Output Capacitance | —— | 42 | —— | | $V_{GS}$ = 0V, $V_{DS}$ = 400V, $f$ = 1.0MHz |
| $C_{oss}$ eff. | Effective Output Capacitance | —— | 56 | —— | | $V_{GS}$ = 0V, $V_{DS}$ = 0V to 400V ⑤ |

## Avalanche Characteristics

| | Parameter | Typ. | Max. | Units |
|---|---|---|---|---|
| $E_{AS}$ | Single Pulse Avalanche Energy② | —— | 510 | mJ |
| $I_{AR}$ | Avalanche Current① | —— | 8.0 | A |
| $E_{AR}$ | Repetitive Avalanche Energy① | —— | 13 | mJ |

## Thermal Resistance

| | Parameter | Typ. | Max. | Units |
|---|---|---|---|---|
| $R_{\theta JC}$ | Junction-to-Case | —— | 1.0 | °C/W |
| $R_{\theta CS}$ | Case-to-Sink, Flat, Greased Surface | 0.50 | —— | |
| $R_{\theta JA}$ | Junction-to-Ambient | | 62 | |

## Diode Characteristics

| | Parameter | Min. | Typ. | Max. | Units | Conditions |
|---|---|---|---|---|---|---|
| $I_S$ | Continuous Source Current (Body Diode) | —— | —— | 8.0 | A | MOSFET symbol showing the integral reverse p-n junction diode. 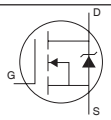 |
| $I_{SM}$ | Pulsed Source Current (Body Diode) ① | —— | —— | 32 | | |
| $V_{SD}$ | Diode Forward Voltage | —— | —— | 2.0 | V | $T_J$ = 25°C, $I_S$ = 8.0A, $V_{GS}$ = 0V ④ |
| $t_{rr}$ | Reverse Recovery Time | —— | 422 | 633 | ns | $T_J$ = 25°C, $I_F$ = 8.0A |
| $Q_{rr}$ | Reverse RecoveryCharge | —— | 2.16 | 3.24 | μC | di/dt = 100A/μs ④ |
| $t_{on}$ | Forward Turn-On Time | Intrinsic turn-on time is negligible (turn-on is dominated by $L_S$+$L_D$) | | | | |

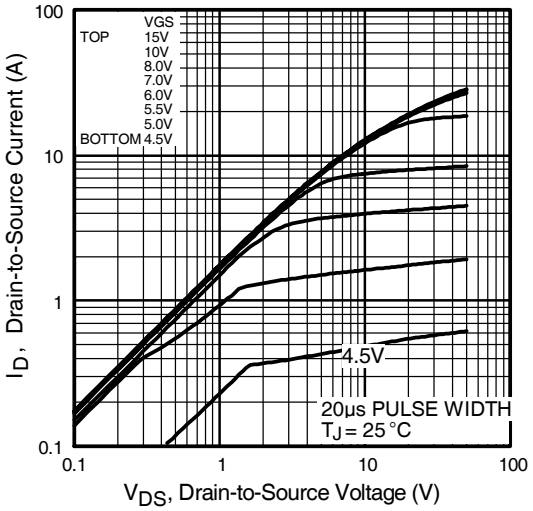


**Fig 1.** Typical Output Characteristics

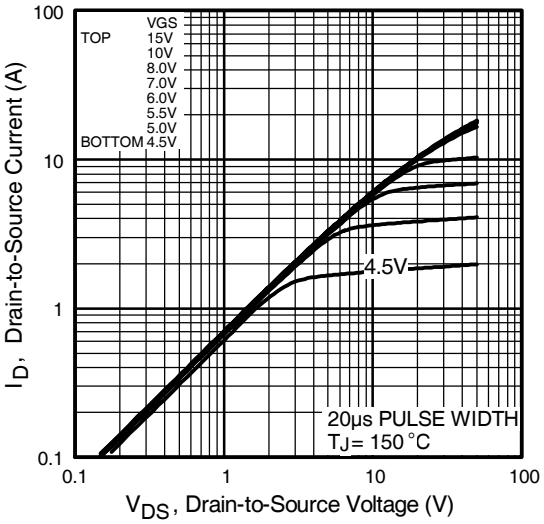


**Fig 2.** Typical Output Characteristics

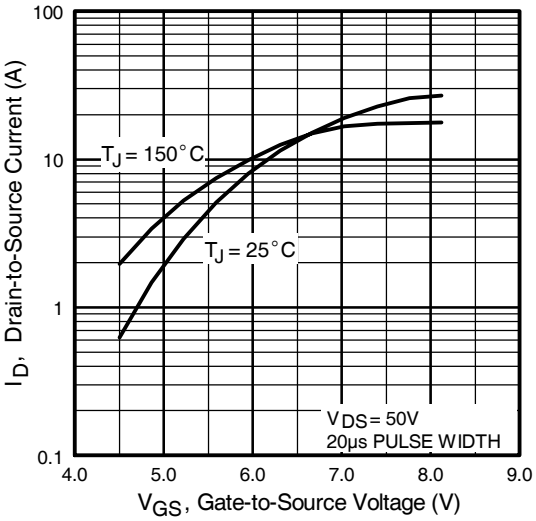


**Fig 3.** Typical Transfer Characteristics

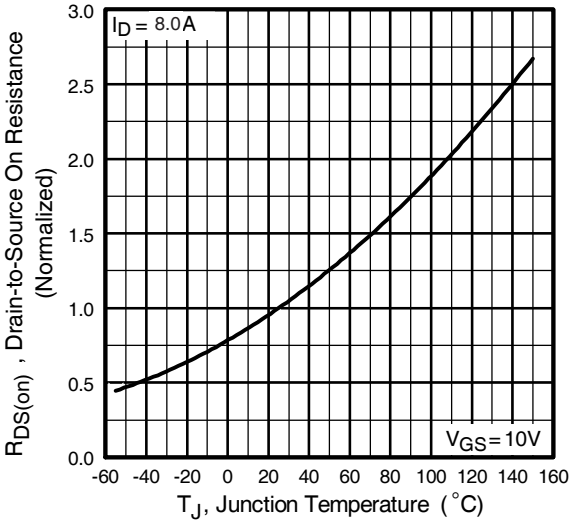


**Fig 4.** Normalized On-Resistance Vs. Temperature

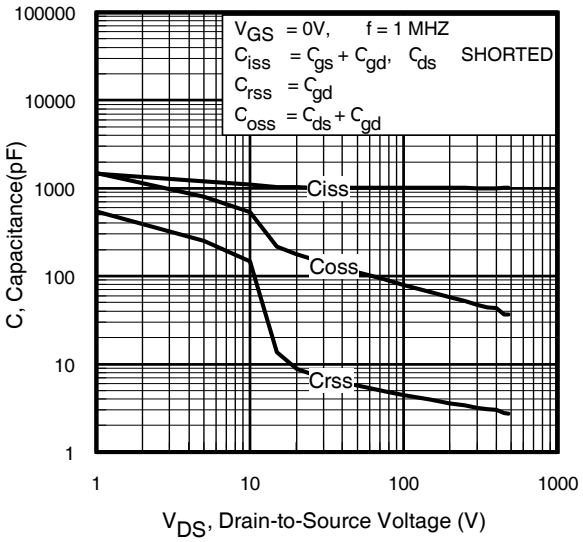


**Fig 5.** Typical Capacitance Vs. Drain-to-Source Voltage

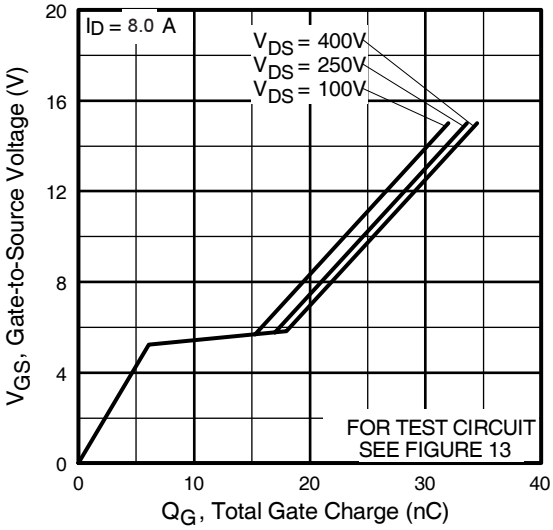


**Fig 6.** Typical Gate Charge Vs. Gate-to-Source Voltage

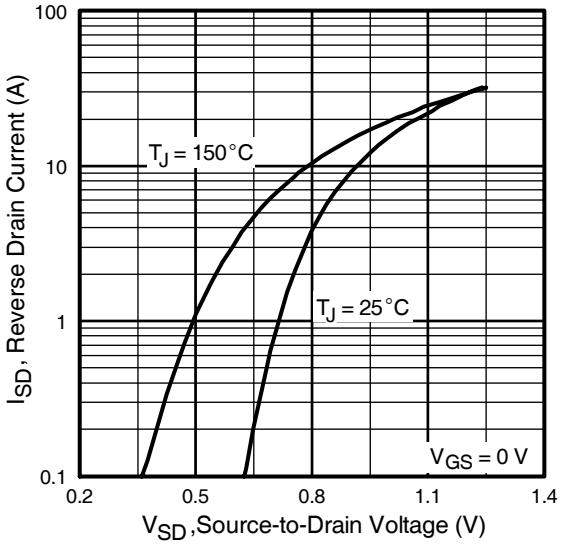


**Fig 7.** Typical Source-Drain Diode Forward Voltage

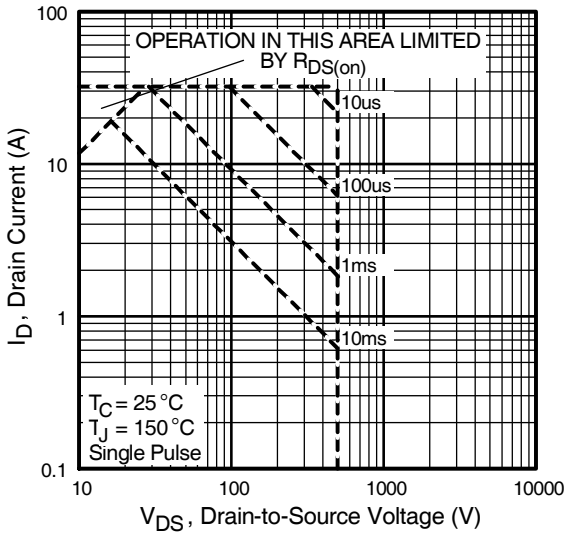


**Fig 8.** Maximum Safe Operating Area

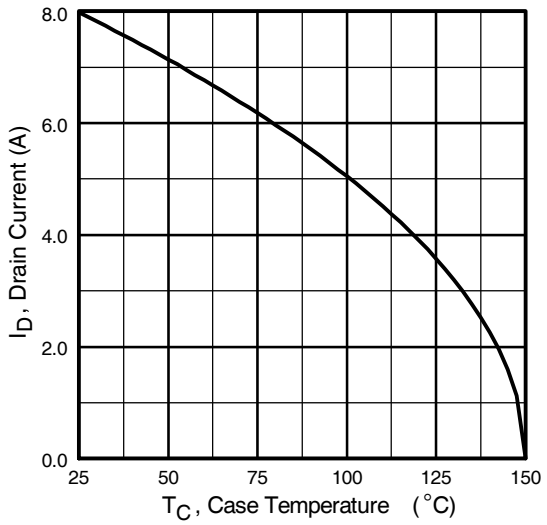


**Fig 9.** Maximum Drain Current Vs. Case Temperature

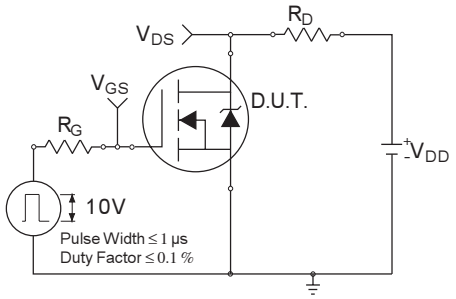


**Fig 10a.** Switching Time Test Circuit

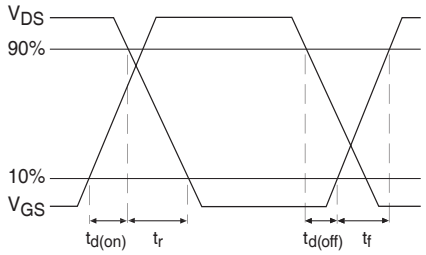


**Fig 10b.** Switching Time Waveforms

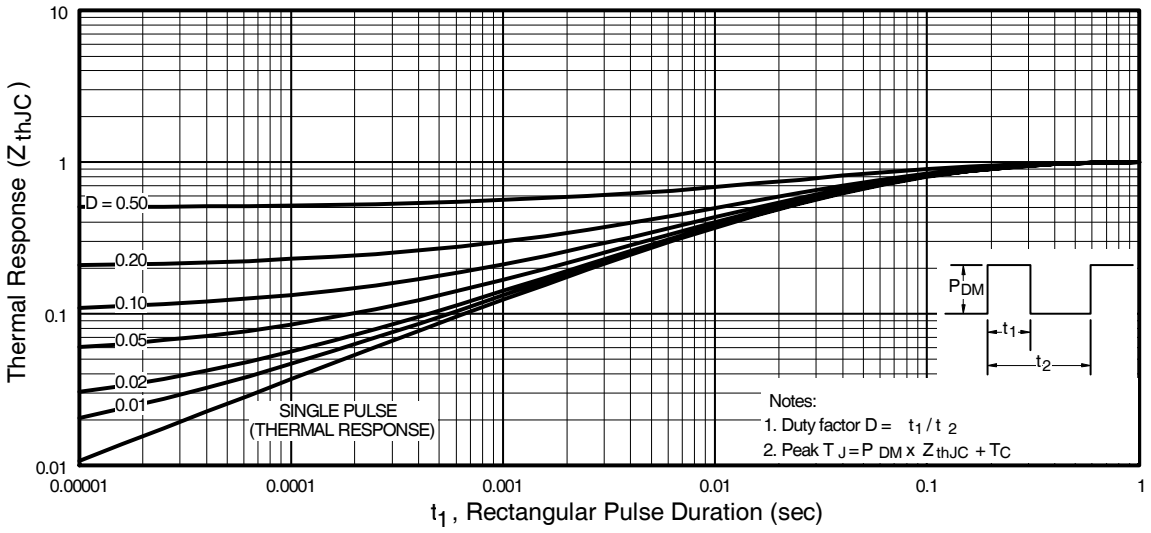


**Fig 11.** Maximum Effective Transient Thermal Impedance, Junction-to-Case

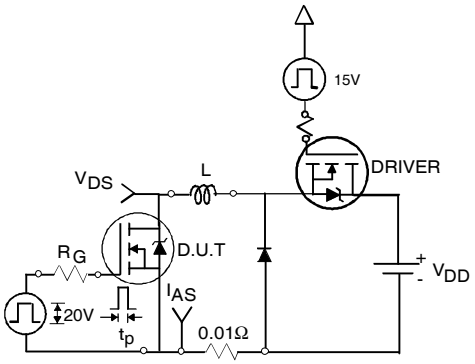


**Fig 12a.** Unclamped Inductive Test Circuit

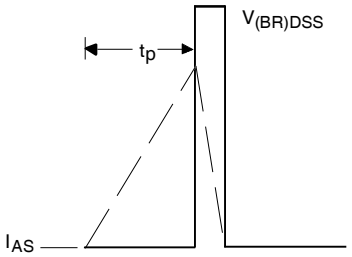


**Fig 12b.** Unclamped Inductive Waveforms

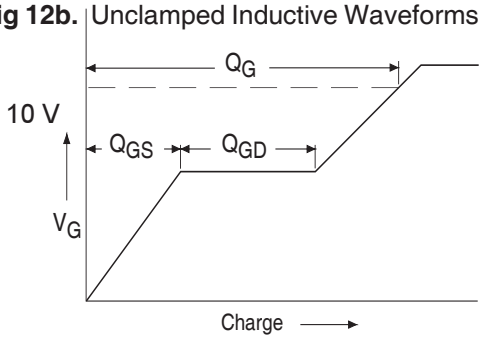


**Fig 13a.** Basic Gate Charge Waveform

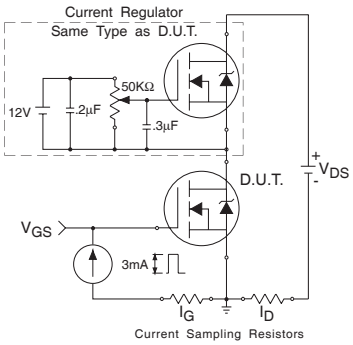


**Fig 13b.** Gate Charge Test Circuit

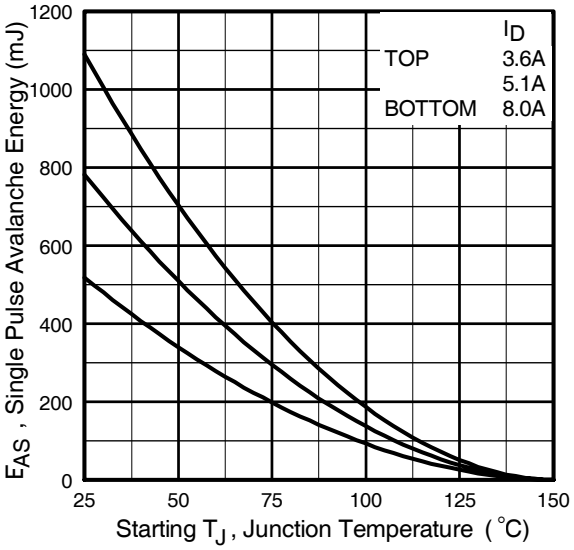


**Fig 12c.** Maximum Avalanche Energy Vs. Drain Current

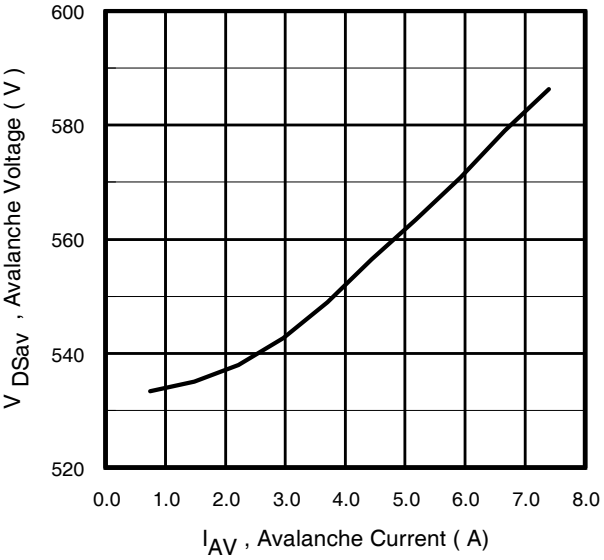


**Fig 12d.** Typical Drain-to-Source Voltage Vs. Avalanche Current

## Peak Diode Recovery dv/dt Test Circuit

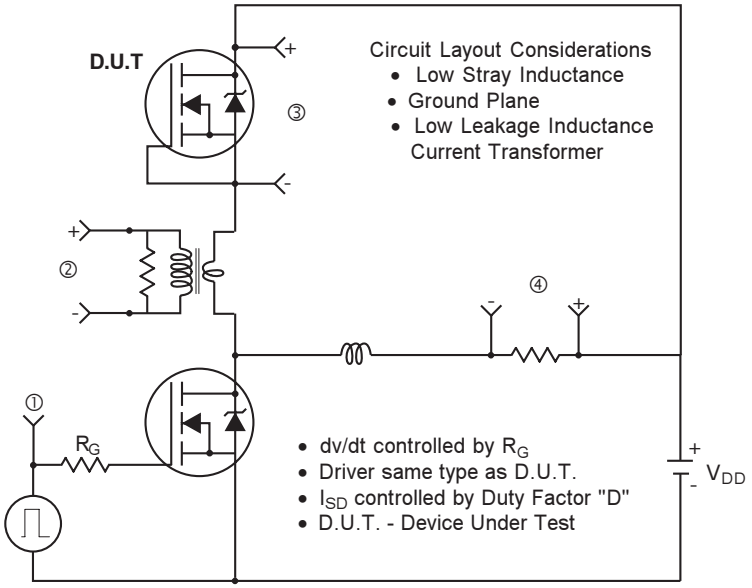


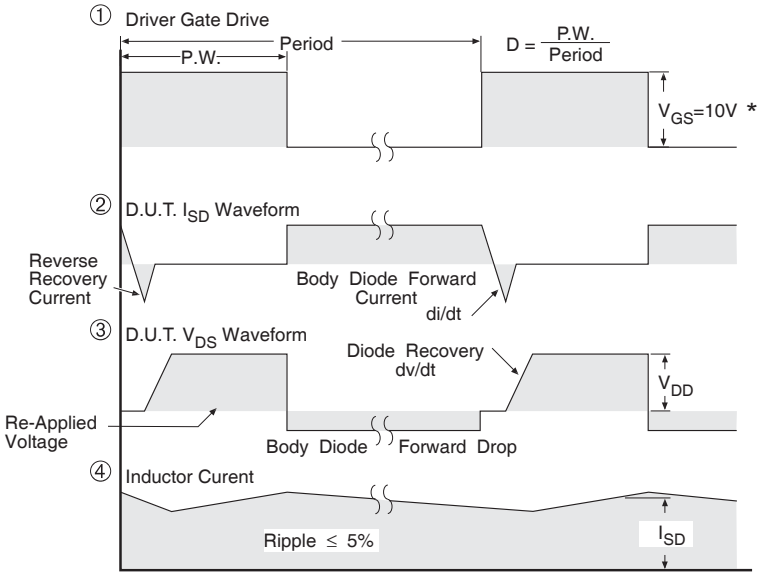


* $V_{GS}$ = 5V for Logic Level Devices

**Fig 14.** For N-Channel HEXFETS

## TO-220AB Package Outline

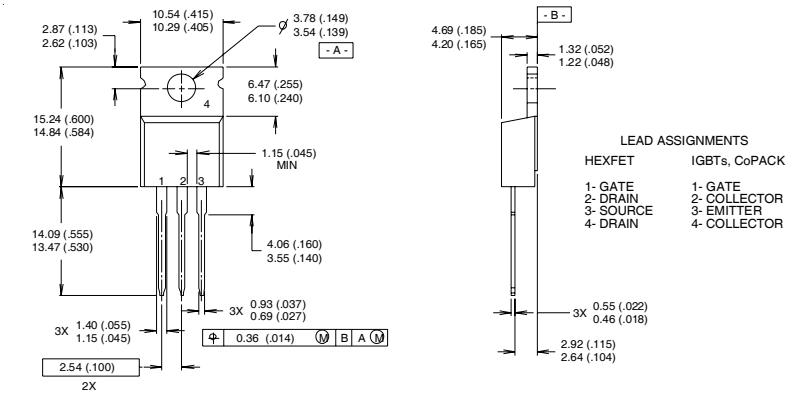


NOTES:

1 DIMENSIONING & TOLERANCING PER ANSI Y14.5M, 1982.
2 CONTROLLING DIMENSION : INCH
3 OUTLINE CONFORMS TO JEDEC OUTLINE TO-220AB.
4 HEATSINK & LEAD MEASUREMENTS DO NOT INCLUDE BURRS.

## TO-220AB Part Marking Information

EXAMPLE: THIS IS AN IRF1010
LOT CODE 1789
ASSEMBLED ON WW 19, 1997
IN THE ASSEMBLY LINE "C"

**Note:** "P" in assembly line position indicates "Lead-Free"

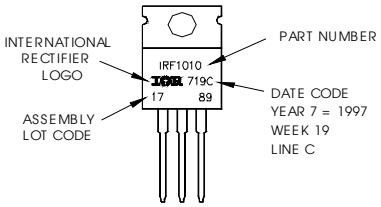


**Notes:**

① Repetitive rating; pulse width limited by max. junction temperature. ( See fig. 11 )

② Starting $T_J = 25°C$, L = 16 mH $R_G = 25\Omega$, $I_{AS} = 8.0A$. (See Figure 12)

③ $I_{SD} \leq 8.0A$, di/dt $\leq$ 100A/µs, $V_{DD} \leq V_{(BR)DSS}$, $T_J \leq 150°C$

④ Pulse width $\leq$ 300µs; duty cycle $\leq$ 2%.

⑤ $C_{oss}$ eff. is a fixed capacitance that gives the same charging time as $C_{oss}$ while $V_{DS}$ is rising from 0 to 80% $V_{DSS}$

Data and specifications subject to change without notice.

International
IOR Rectifier

**IR WORLD HEADQUARTERS:** 233 Kansas St., El Segundo, California 90245, USA Tel: (310) 252-7105
TAC Fax: (310) 252-7903
11/03

# Notice

The products described herein were acquired by Vishay Intertechnology, Inc., as part of its acquisition of International Rectifier's Power Control Systems (PCS) business, which closed in April 2007. Specifications of the products displayed herein are pending review by Vishay and are subject to the terms and conditions shown below.

Specifications of the products displayed herein are subject to change without notice. Vishay Intertechnology, Inc., or anyone on its behalf, assumes no responsibility or liability for any errors or inaccuracies.

Information contained herein is intended to provide a product description only. No license, express or implied, by estoppel or otherwise, to any intellectual property rights is granted by this document. Except as provided in Vishay's terms and conditions of sale for such products, Vishay assumes no liability whatsoever, and disclaims any express or implied warranty, relating to sale and/or use of Vishay products including liability or warranties relating to fitness for a particular purpose, merchantability, or infringement of any patent, copyright, or other intellectual property right.

The products shown herein are not designed for use in medical, life-saving, or life-sustaining applications. Customers using or selling these products for use in such applications do so at their own risk and agree to fully indemnify Vishay for any damages resulting from such improper use or sale.

International Rectifier®, IR®, the IR logo, HEXFET®, HEXSense®, HEXDIP®, DOL®, INTERO®, and POWIRTRAIN® are registered trademarks of International Rectifier Corporation in the U.S. and other countries. All other product names noted herein may be trademarks of their respective owners.