International
IOR Rectifier

PD- 91878D

SMPS MOSFET

IRF830A

HEXFET® Power MOSFET

Applications

- Switch Mode Power Supply (SMPS)
- Uninterruptable Power Supply
- High speed power switching

V_{DSS}	Rds(on) max	I_D
500V	**1.40Ω**	**5.0A**

Benefits

- Low Gate Charge Qg results in Simple Drive Requirement
- Improved Gate, Avalanche and dynamic dv/dt Ruggedness
- Fully Characterized Capacitance and Avalanche Voltage and Current
- Effective Coss specified (See AN 1001)

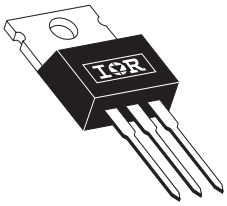

TO-220AB G D S

Absolute Maximum Ratings

	Parameter	Max.	Units
I_D @ T_C = 25°C	Continuous Drain Current, V_{GS} @ 10V	5.0	A
I_D @ T_C = 100°C	Continuous Drain Current, V_{GS} @ 10V	3.2	
I_{DM}	Pulsed Drain Current ①	20	
P_D @T_C = 25°C	Power Dissipation	74	W
	Linear Derating Factor	0.59	W/°C
V_{GS}	Gate-to-Source Voltage	± 30	V
dv/dt	Peak Diode Recovery dv/dt ③	5.3	V/ns
T_J T_{STG}	Operating Junction and Storage Temperature Range	-55 to + 150	°C
	Soldering Temperature, for 10 seconds	300 (1.6mm from case)	
	Mounting torqe, 6-32 or M3 screw	10 lbf•in (1.1N•m)	

Typical SMPS Topologies:

- Two transistor Forward
- Half Bridge and Full Bridge

Notes ① through ⑤ are on page 8

Static @ T_J = 25°C (unless otherwise specified)

	Parameter	Min.	Typ.	Max.	Units	Conditions
$V_{(BR)DSS}$	Drain-to-Source Breakdown Voltage	500	——	——	V	V_{GS} = 0V, I_D = 250µA
$\Delta V_{(BR)DSS}/\Delta T_J$	Breakdown Voltage Temp. Coefficient	——	0.60	——		V/°C Reference to 25°C, I_D = 1mA
$R_{DS(on)}$	Static Drain-to-Source On-Resistance	——	——	1.4	Ω	V_{GS} = 10V, I_D = 3.0A ④
$V_{GS(th)}$	Gate Threshold Voltage	2.0	——	4.5	V	V_{DS} = V_{GS}, I_D = 250µA
I_{DSS}	Drain-to-Source Leakage Current	——	——	25	µA	V_{DS} = 500V, V_{GS} = 0V
		——	——	250		V_{DS} = 400V, V_{GS} = 0V, T_J = 125°C
I_{GSS}	Gate-to-Source Forward Leakage	——	——	100	nA	V_{GS} = 30V
	Gate-to-Source Reverse Leakage	——	——	-100		V_{GS} = -30V

Dynamic @ T_J = 25°C (unless otherwise specified)

	Parameter	Min.	Typ.	Max.	Units	Conditions
g_{fs}	Forward Transconductance	2.8	——	——	S	V_{DS} = 50V, I_D = 3.0A
Q_g	Total Gate Charge	——	——	24	nC	I_D = 5.0A
Q_{gs}	Gate-to-Source Charge	——	——	6.3		V_{DS} = 400V
Q_{gd}	Gate-to-Drain ("Miller") Charge	——	——	11		V_{GS} = 10V, See Fig. 6 and 13 ④
$t_{d(on)}$	Turn-On Delay Time	——	10	——	ns	V_{DD} = 250V
t_r	Rise Time	——	21	——		I_D = 5.0A
$t_{d(off)}$	Turn-Off Delay Time	——	21	——		R_G = 14Ω
t_f	Fall Time	——	15	——		R_D = 49Ω,See Fig. 10 ④
C_{iss}	Input Capacitance	——	620	——	pF	V_{GS} = 0V
C_{oss}	Output Capacitance	——	93	——		V_{DS} = 25V
C_{rss}	Reverse Transfer Capacitance	——	4.3	——		ƒ = 1.0MHz, See Fig. 5
C_{oss}	Output Capacitance	——	886	——		V_{GS} = 0V, V_{DS} = 1.0V, ƒ = 1.0MHz
C_{oss}	Output Capacitance	——	27	——		V_{GS} = 0V, V_{DS} = 400V, ƒ = 1.0MHz
C_{oss} eff.	Effective Output Capacitance	——	39	——		V_{GS} = 0V, V_{DS} = 0V to 400V ⑤

Avalanche Characteristics

	Parameter	Typ.	Max.	Units
E_{AS}	Single Pulse Avalanche Energy②	——	230	mJ
I_{AR}	Avalanche Current①	——	5.0	A
E_{AR}	Repetitive Avalanche Energy①	——	7.4	mJ

Thermal Resistance

	Parameter	Typ.	Max.	Units
$R_{\theta JC}$	Junction-to-Case	——	1.7	°C/W
$R_{\theta CS}$	Case-to-Sink, Flat, Greased Surface	0.50	——	
$R_{\theta JA}$	Junction-to-Ambient	——	62	

Diode Characteristics

	Parameter	Min.	Typ.	Max.	Units	Conditions
I_S	Continuous Source Current (Body Diode)	——	——	5.0	A	MOSFET symbol showing the integral reverse p-n junction diode. 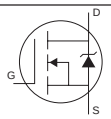
I_{SM}	Pulsed Source Current (Body Diode) ①	——	——	20		
V_{SD}	Diode Forward Voltage	——	——	1.5	V	T_J = 25°C, I_S = 5.0A, V_{GS} = 0V ④
t_{rr}	Reverse Recovery Time	——	430	650	ns	T_J = 25°C, I_F = 5.0A
Q_{rr}	Reverse RecoveryCharge	——	1.62	2.4	µC	di/dt = 100A/µs ④
t_{on}	Forward Turn-On Time	Intrinsic turn-on time is negligible (turn-on is dominated by L_S+L_D)				

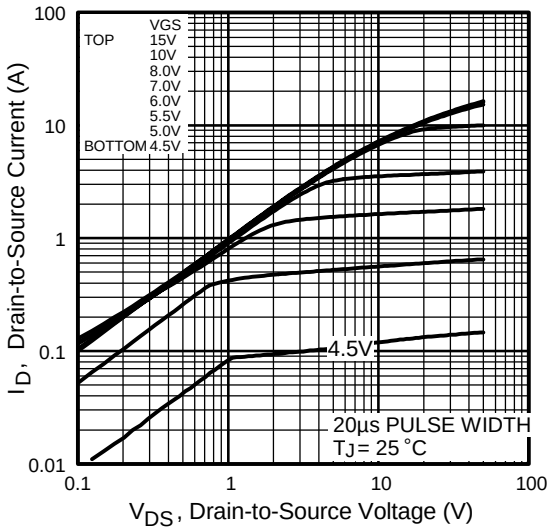

Fig 1. Typical Output Characteristics

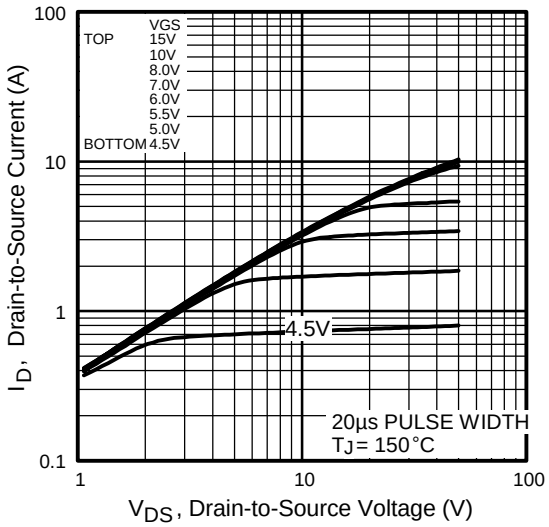

Fig 2. Typical Output Characteristics

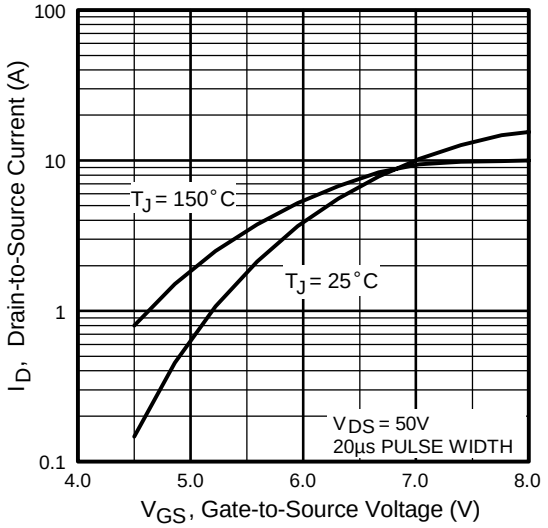

Fig 3. Typical Transfer Characteristics

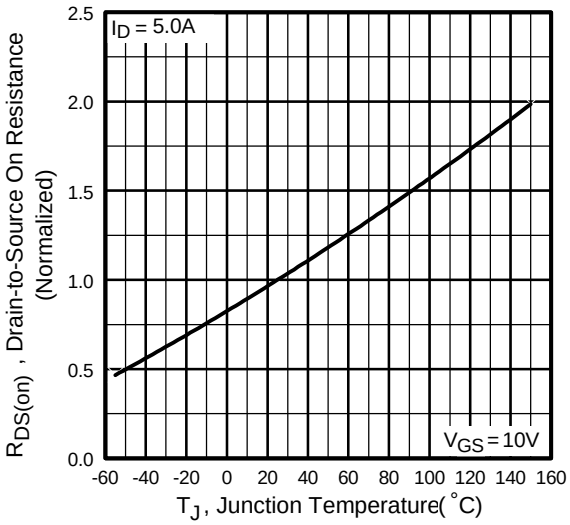

Fig 4. Normalized On-Resistance Vs. Temperature

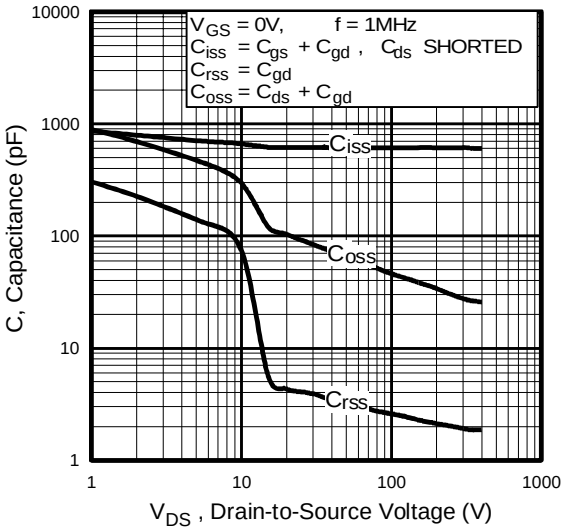

Fig 5. Typical Capacitance Vs. Drain-to-Source Voltage

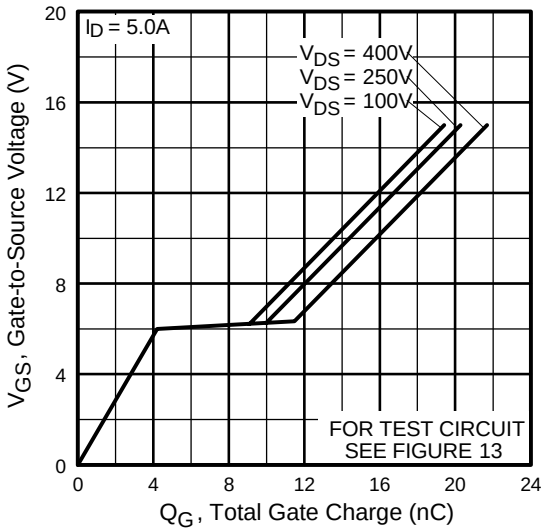

Fig 6. Typical Gate Charge Vs. Gate-to-Source Voltage

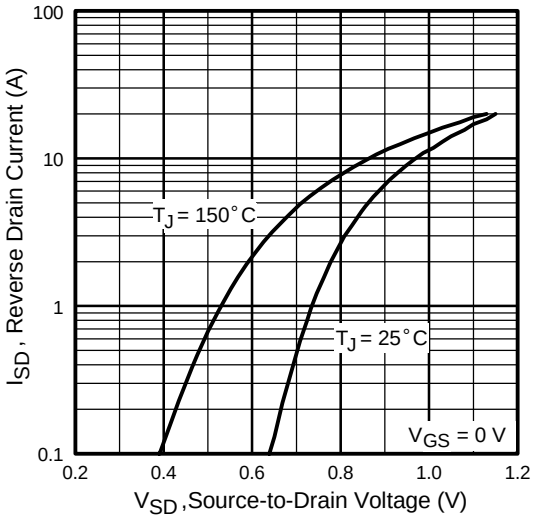

Fig 7. Typical Source-Drain Diode Forward Voltage

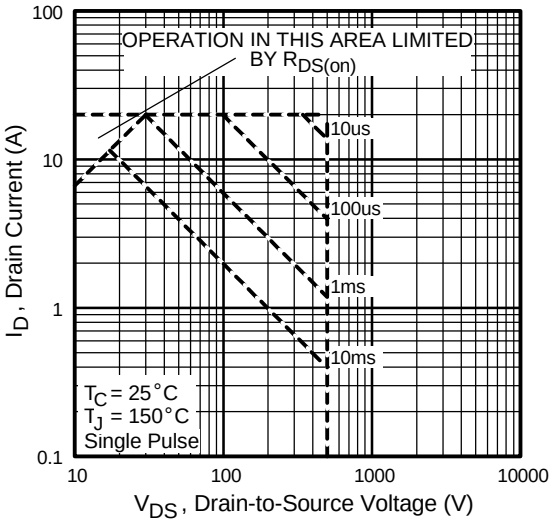

Fig 8. Maximum Safe Operating Area

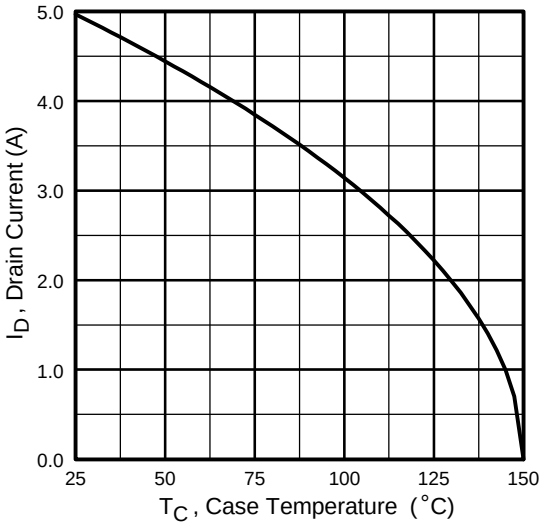

Fig 9. Maximum Drain Current Vs. Case Temperature

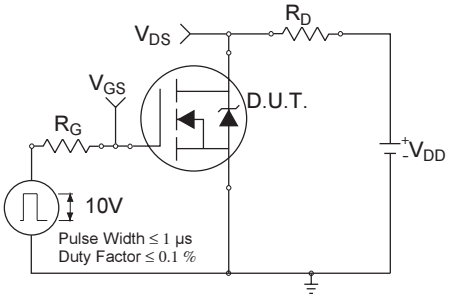

Fig 10a. Switching Time Test Circuit

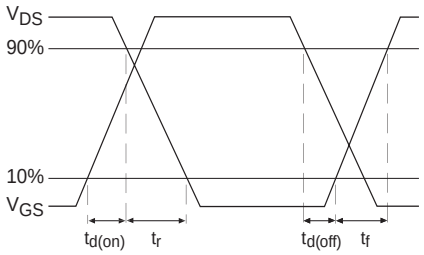

Fig 10b. Switching Time Waveforms

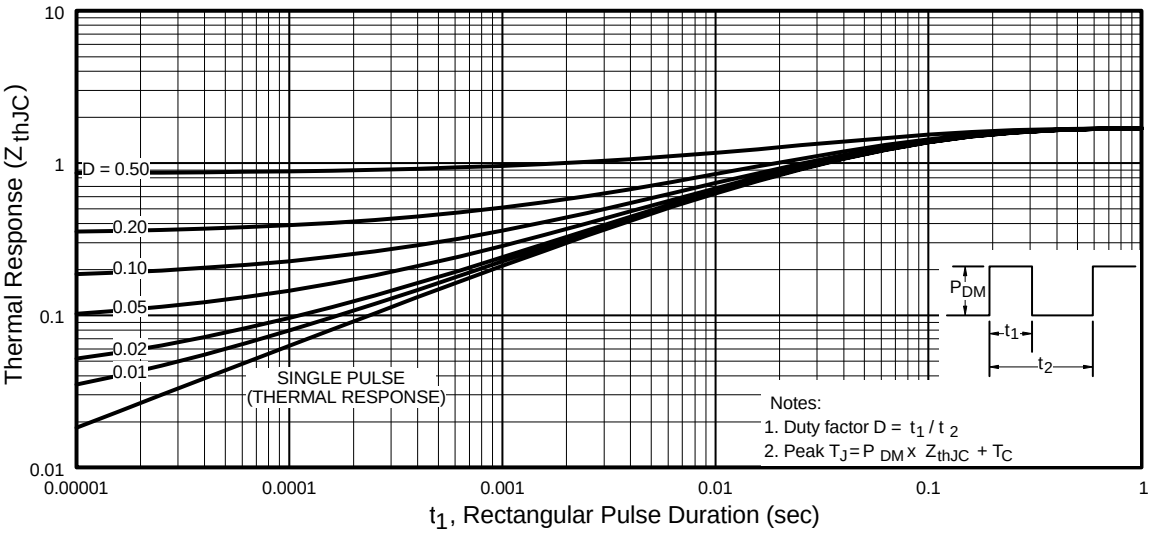

Fig 11. Maximum Effective Transient Thermal Impedance, Junction-to-Case

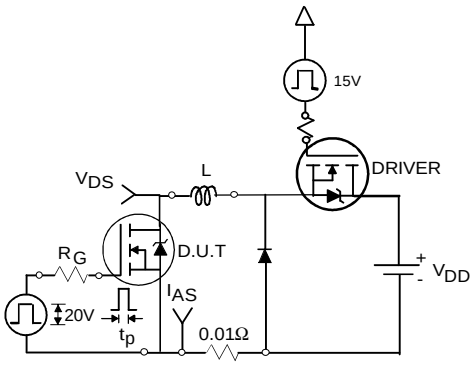

Fig 12a. Unclamped Inductive Test Circuit

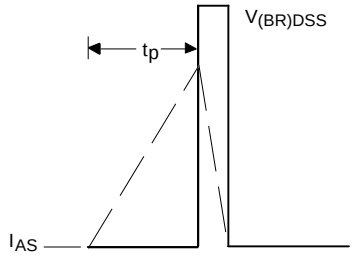

Fig 12b. Unclamped Inductive Waveforms

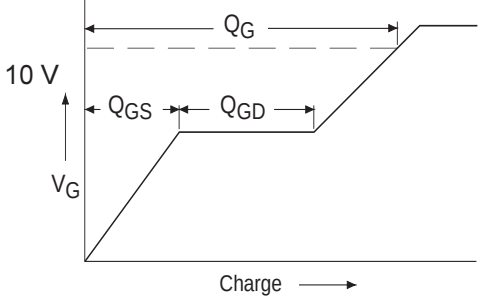

Fig 13a. Basic Gate Charge Waveform

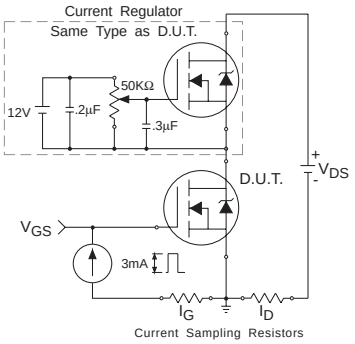

Fig 13b. Gate Charge Test Circuit

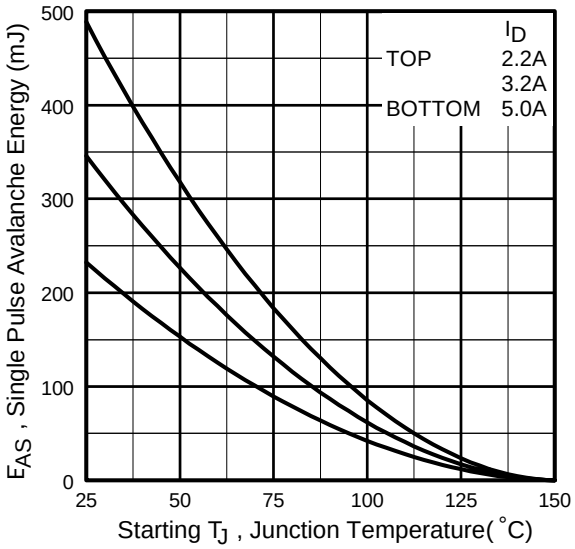

Fig 12c. Maximum Avalanche Energy Vs. Drain Current

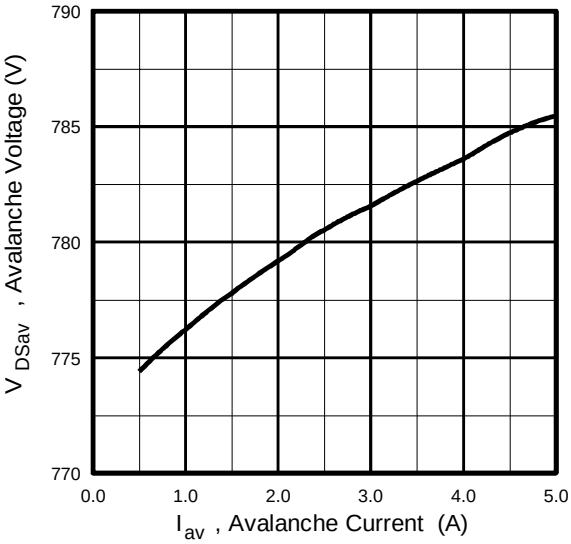

Fig 12d. Typical Drain-to-Source Voltage Vs. Avalanche Current

Peak Diode Recovery dv/dt Test Circuit

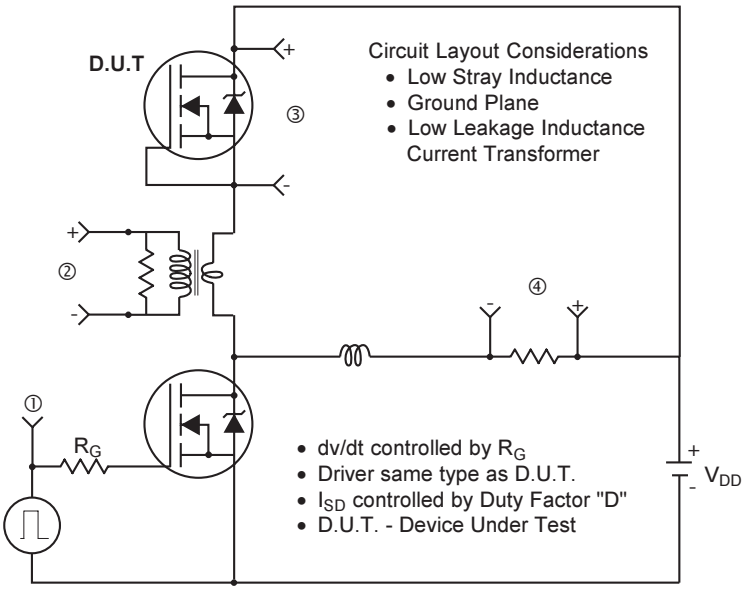

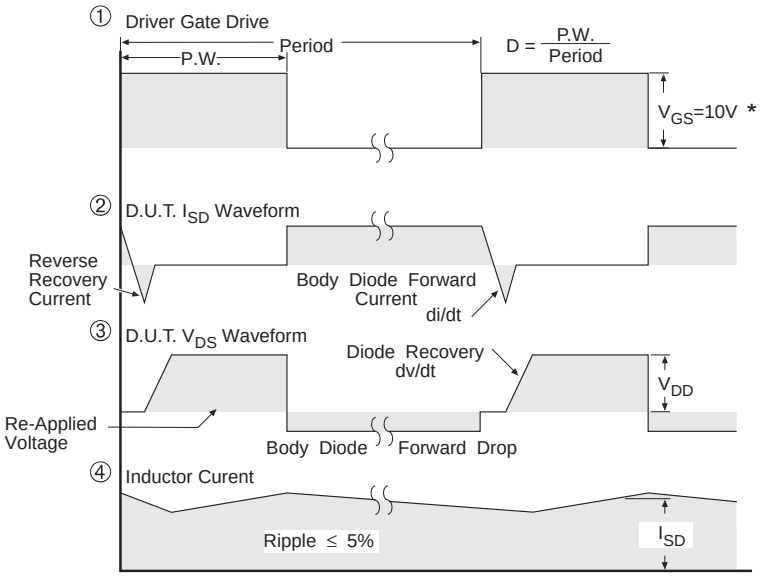

* V_{GS} = 5V for Logic Level Devices

Fig 14. For N-Channel HEXFETS

International
IOR Rectifier

Package Outline

TO-220AB Outline

Dimensions are shown in millimeters (inches)

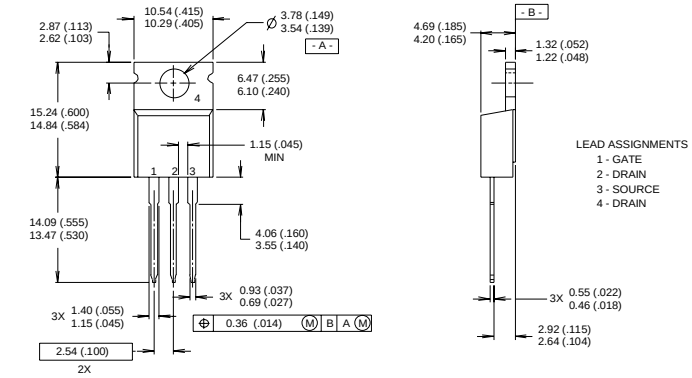

NOTES:

1 DIMENSIONING & TOLERANCING PER ANSI Y14.5M, 1982.
2 CONTROLLING DIMENSION : INCH
3 OUTLINE CONFORMS TO JEDEC OUTLINE TO-220AB.
4 HEATSINK & LEAD MEASUREMENTS DO NOT INCLUDE BURRS.

Part Marking Information

TO-220AB

EXAMPLE : THIS IS AN IRF1010
WITH ASSEMBLY
LOT CODE 9B1M

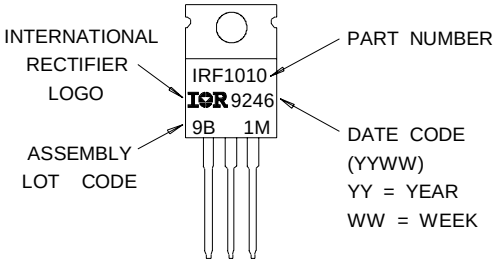

Notes:

① Repetitive rating; pulse width limited by max. junction temperature. (See fig. 11)

② Starting $T_J = 25°C$, L = 18mH $R_G = 25\Omega$, $I_{AS} = 5.0A$. (See Figure 12)

③ $I_{SD} \leq 5.0A$, di/dt $\leq$ 370A/µs, $V_{DD} \leq V_{(BR)DSS}$, $T_J \leq 150°C$

④ Pulse width $\leq$ 300µs; duty cycle $\leq$ 2%.

⑤ C_{oss} eff. is a fixed capacitance that gives the same charging time as C_{oss} while V_{DS} is rising from 0 to 80% V_{DSS}

International
IOR Rectifier

IR WORLD HEADQUARTERS: 233 Kansas St., El Segundo, California 90245, USA Tel: (310) 252-7105
IR EUROPEAN REGIONAL CENTRE: 439/445 Godstone Rd, Whyteleafe, Surrey CR3 OBL, UK Tel: ++ 44 (0)20 8645 8000
IR CANADA: 15 Lincoln Court, Brampton, Ontario L6T3Z2, Tel: (905) 453 2200
IR GERMANY: Saalburgstrasse 157, 61350 Bad Homburg Tel: ++ 49 (0) 6172 96590
IR ITALY: Via Liguria 49, 10071 Borgaro, Torino Tel: ++ 39 011 451 0111
IR JAPAN: K&H Bldg., 2F, 30-4 Nishi-Ikebukuro 3-Chome, Toshima-Ku, Tokyo 171 Tel: 81 (0)3 3983 0086
IR SOUTHEAST ASIA: 1 Kim Seng Promenade, Great World City West Tower, 13-11, Singapore 237994 Tel: ++ 65 (0)838 4630
IR TAIWAN:16 Fl. Suite D. 207, Sec. 2, Tun Haw South Road, Taipei, 10673 Tel: 886-(0)2 2377 9936
Data and specifications subject to change without notice. 3/03

Notice

The products described herein were acquired by Vishay Intertechnology, Inc., as part of its acquisition of International Rectifier's Power Control Systems (PCS) business, which closed in April 2007. Specifications of the products displayed herein are pending review by Vishay and are subject to the terms and conditions shown below.

Specifications of the products displayed herein are subject to change without notice. Vishay Intertechnology, Inc., or anyone on its behalf, assumes no responsibility or liability for any errors or inaccuracies.

Information contained herein is intended to provide a product description only. No license, express or implied, by estoppel or otherwise, to any intellectual property rights is granted by this document. Except as provided in Vishay's terms and conditions of sale for such products, Vishay assumes no liability whatsoever, and disclaims any express or implied warranty, relating to sale and/or use of Vishay products including liability or warranties relating to fitness for a particular purpose, merchantability, or infringement of any patent, copyright, or other intellectual property right.

The products shown herein are not designed for use in medical, life-saving, or life-sustaining applications. Customers using or selling these products for use in such applications do so at their own risk and agree to fully indemnify Vishay for any damages resulting from such improper use or sale.

International Rectifier®, IR®, the IR logo, HEXFET®, HEXSense®, HEXDIP®, DOL®, INTERO®, and POWIRTRAIN® are registered trademarks of International Rectifier Corporation in the U.S. and other countries. All other product names noted herein may be trademarks of their respective owners.