GENERAL SPECIFICATION

Item	Content
Number of Character	16x1
Module Size	122.0(W)x33.0(H)x10.5/15.0(D)mm Max
Viewing Area	99.0(W)x13.0(H)mm
Character Size	4.84(W)x9.22(H)mm
Dot Size/Dot Pitch	0.92(W)x1.10(H)mm/0.98(W)x1.16(H)mm
Backlight	Without/LED
Options	Gray STN/Yellow STN/Extended Temperature/Bottom/Top Viewing

INTERFACE PIN ASSIGNMENT

Pin No.	Pin Out	Function Description
1	V_{SS}	Ground
2	V_{DD}	Logic Circuit Power Supply
3	V_O	Power Supply for LCD Panel
4	RS	Data/Instruction Register Select
5	R/W	Read/Write Select
6	E	Enable Signal
7~14	DB0~DB7	3-State I/O Data Bus
15	BKL1	Power Supply for Backlight. 100V/400Hz AC for EL, 4.2V or 120~180mA DC for LED backlight. Don't care if no backlight
16	BKL2	

ELECTRICAL CHARACTERISTICS

Item	Symbol	Condition	Min.	Typ.	Max.	Unit	Note
Power Supply for Logic	V_{DD}-V_{SS}	-	2.7	4.5	5.5	Volt	
Input Voltage	V_{IL}	L level	V_{SS}	$0.2V_{DD}$	-	Volt	
	V_{IH}	H level	$0.8V_{DD}$	V_{DD}	-	Volt	
LCM Recommend LCD Module Driving Voltage	V_{DD}=5V	Ta=0°C	4.2	4.7	5.1	Volt	
		Ta=25°C	4.1	4.6	5.0		
		Ta=50°C	3.9	4.9	4.8		
Power Supply Current for LCM	I_{DD}*(B/L OFF)	V_{DD}=5.0V V_{LED}=4.2V Ta=25°C	-	1.5	3.0	mA	

BLOCK DIAGRAM

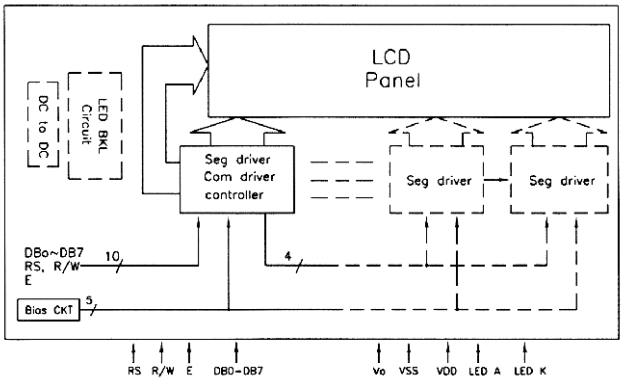

POWER SUPPLY

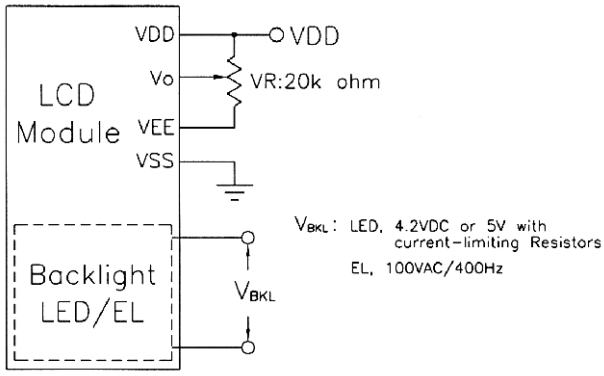
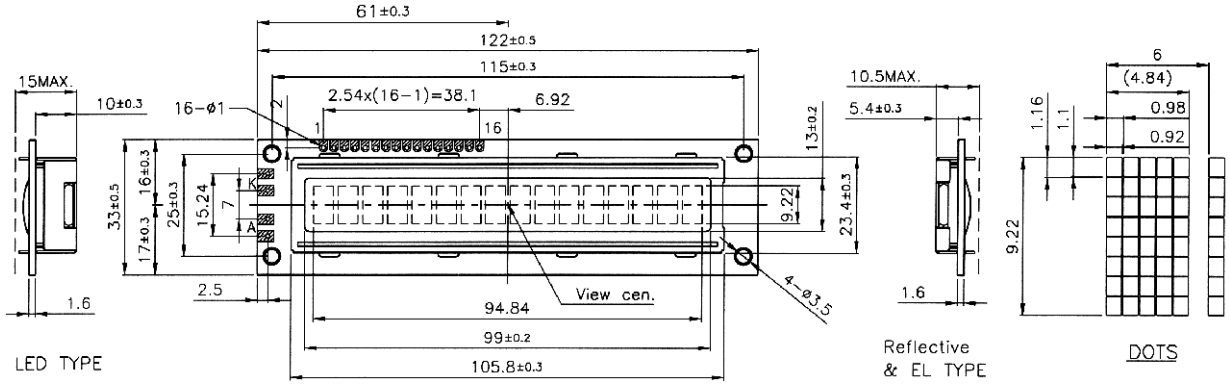
MECHANICAL