18-Bit, 15Msps SAR ADC

FEATURES

- **15Msps Throughput Rate**
- **No Pipeline Delay, No Cycle Latency**
- **95.7dB SNR (Typ) at f_{IN} = 1MHz**
- **102dB SFDR (Typ) at f_{IN} = 1MHz**
- **Nyquist Sampling Up to 7.5MHz Input**
- Guaranteed 18-Bit, No Missing Codes
- ±3LSB INL (Max)
- 8.192V_{P-P} Differential Inputs
- 5V and 2.5V Supplies
- Internal 20ppm/°C (Max) Reference
- Serial LVDS Interface
- 125mW Power Dissipation
- 32-Pin (5mm × 5mm) QFN Package

APPLICATIONS

- High Speed Data Acquisition
- Imaging
- Communications
- Control Loops
- Instrumentation
- ATE

DESCRIPTION

The LTC®2387-18 is a low noise, high speed, 18-bit 15Msps successive approximation register (SAR) ADC ideally suited for a wide range of applications. The combination of excellent linearity and wide dynamic range makes the LTC2387-18 ideal for high speed imaging and instrumentation applications. No latency operation provides a unique solution for high speed control loop applications. The very low distortion at high input frequencies enables communications applications requiring wide dynamic range and significant signal bandwidth.

To support high speed operation while minimizing the number of data lines, the LTC2387-18 features a serial LVDS digital interface. The LVDS interface has one-lane and two-lane output modes, allowing the user to optimize the interface data rate for each application.

, LT, LTC, LTM, Linear Technology and the Linear logo are registered trademarks of Linear Technology Corporation. All other trademarks are the property of their respective owners. Protected by U.S. Patents, including 7705765, 8232905, 8810443. Other patents are pending.

TYPICAL APPLICATION

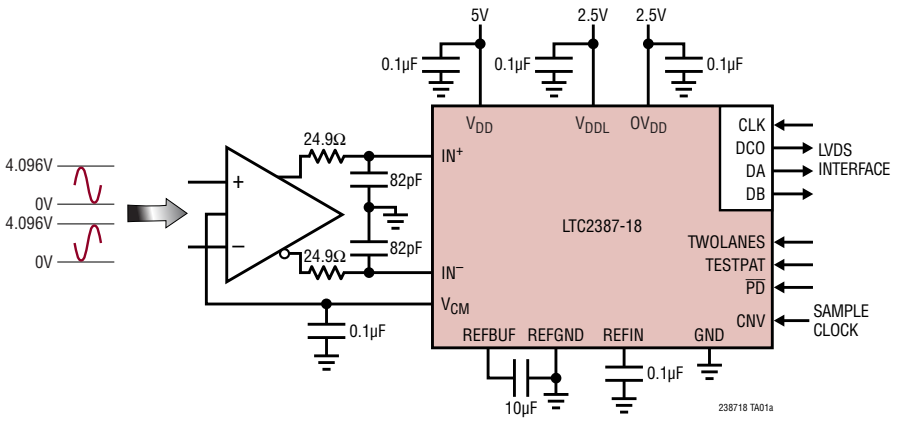

FFT, f_{SMPL} = 15Msps, f_{IN} = 2kHz

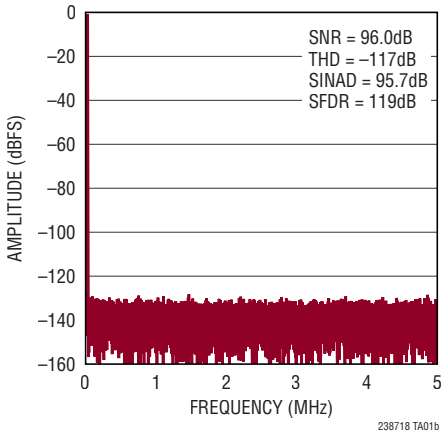

ABSOLUTE MAXIMUM RATINGS

(Notes 1, 2)

Supply Voltage (V_{DD}) 6V
Supply Voltage (V_{DDL}, OV_{DD}) 2.8V
Analog Input Voltage (Note 3)
  IN^+, IN^- ..... (GND – 0.3V) to (V_{DD} + 0.3V)
  REFBUF ..... (GND – 0.3V) to (V_{DD} + 0.3V)
  REFIN (Note 4) ..... (GND – 0.3V) to 2.8V
Digital Input Voltage (Note 3)
  $\overline{PD}$, TESTPAT ..... (GND – 0.3V) to (OV_{DD} + 0.3V)
  CLK^+, CLK^- ..... (GND – 0.3V) to (OV_{DD} + 0.3V)
  TWOLANES, CNV^+,
  CNV^- ..... (GND – 0.3V) to (V_{DDL} + 0.3V)
Power Dissipation 500mW
Operating Temperature Range
  LTC2387C ..... 0°C to 70°C
  LTC2387I ..... –40°C to 85°C
Storage Temperature Range ..... –65°C to 150°C

PIN CONFIGURATION

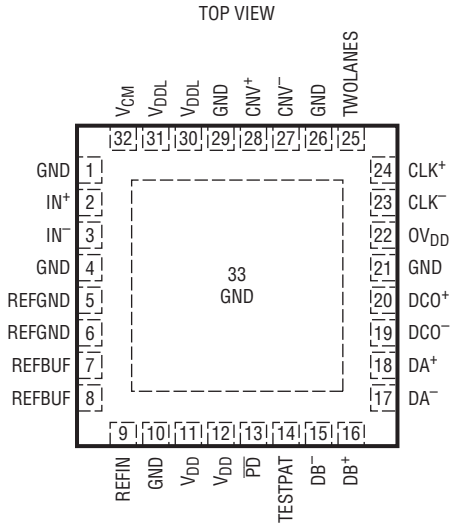

UH PACKAGE
32-LEAD (5mm × 5mm) PLASTIC QFN
T_{JMAX} = 125°C, θ_{JA} = 34°C/W
EXPOSED PAD (PIN 33) IS GND, MUST BE SOLDERED TO PCB

ORDER INFORMATION

LEAD FREE FINISH	TAPE AND REEL	PART MARKING*	PACKAGE DESCRIPTION	TEMPERATURE RANGE
LTC2387CUH-18#PBF	LTC2387CUH-18#TRPBF	238718	32-Lead (5mm × 5mm) Plastic QFN	0°C to 70°C
LTC2387IUH-18#PBF	LTC2387IUH-18#TRPBF	238718	32-Lead (5mm × 5mm) Plastic QFN	–40°C to 85°C

Consult LTC Marketing for parts specified with wider operating temperature ranges. *The temperature grade is identified by a label on the shipping container. Consult LTC Marketing for information on nonstandard lead based finish parts.

For more information on lead free part marking, go to: http://www.linear.com/leadfree/
For more information on tape and reel specifications, go to: http://www.linear.com/tapeandreel/

ELECTRICAL CHARACTERISTICS

The ● denotes the specifications which apply over the full operating temperature range, otherwise specifications are at T_A = 25°C. (Note 5)

SYMBOL	PARAMETER	CONDITIONS		MIN	TYP	MAX	UNITS
V_{IN}^+	Absolute Input Range (IN^+)	(Note 6)	●	–0.1		V_{REFBUF} + 0.1	V
V_{IN}^-	Absolute Input Range (IN^-)	(Note 6)	●	–0.1		V_{REFBUF} + 0.1	V
$V_{IN}^+ – V_{IN}^-$	Input Differential Voltage Range	$V_{IN}^+ – V_{IN}^-$	●	$–V_{REFBUF}$		V_{REFBUF}	V
V_{INCM}	Common Mode Input Range	$(V_{IN}^+ + V_{IN}^-)/2$	●	$V_{REFBUF}/2$ – 0.1	$V_{REFBUF}/2$	$V_{REFBUF}/2$ + 0.1	V
I_{IN}	Analog Input DC Leakage Current		●	–1		1	µA
C_{IN}	Analog Input Capacitance	Sample Mode Hold Mode			20 2		pF pF
CMRR	Input Common Mode Rejection Ratio	f_{IN} = 1MHz			75		dB

CONVERTER CHARACTERISTICS

The ● denotes the specifications which apply over the full operating temperature range, otherwise specifications are at T_A = 25°C. (Note 5)

SYMBOL	PARAMETER	CONDITIONS		MIN	TYP	MAX	UNITS
	Resolution		●	18			Bits
	No Missing Codes		●	18			Bits
	Transition Noise				1.4		LSB_{RMS}
INL	Integral Linearity Error	REFBUF = 4.096V (Notes 7, 9)	●	–3	±0.6	3	LSB
DNL	Differential Linearity Error		●	–0.9	±0.2	0.9	LSB
ZSE	Zero-Scale Error	(Note 8)	●	–16	±1.5	16	LSB
	Zero-Scale Error Drift				0.02		LSB/°C
FSE	Full-Scale Error	REFBUF = 4.096V (REFBUF Overdriven) (Notes 8, 9) REFIN = 2.048V (REFIN Overdriven) (Note 8)	● ●	–25 –160	±5 ±25	25 160	LSB LSB
	Full-Scale Error Drift	REFBUF = 4.096V (REFBUF Overdriven) (Note 9) REFIN = 2.048V (REFIN Overdriven)			±0.1 ±1.5		ppm/°C ppm/°C

DYNAMIC ACCURACY

The ● denotes the specifications which apply over the full operating temperature range, otherwise specifications are at T_A = 25°C and A_{IN} = –1dBFS. (Notes 5, 10)

SYMBOL	PARAMETER	CONDITIONS		MIN	TYP	MAX	UNITS
SINAD	Signal-to-(Noise + Distortion) Ratio	f_{IN} = 2kHz f_{IN} = 1MHz f_{IN} = 5MHz	● ●	93 92.6	95.7 94.5 83		dB dB dB
SNR	Signal-to-Noise Ratio	f_{IN} = 2kHz f_{IN} = 1MHz f_{IN} = 5MHz	● ●	93.2 93	96 95.7 94.6		dB dB dB
THD	Total Harmonic Distortion (First Five Harmonics)	f_{IN} = 2kHz f_{IN} = 1MHz f_{IN} = 5MHz	● ●		–117 –101 –83	–103 –96	dB dB dB
SFDR	Spurious Free Dynamic Range	f_{IN} = 2kHz f_{IN} = 1MHz f_{IN} = 5MHz	● ●	103 97	119 102 84		dB dB dB
	–3dB Input Bandwidth				200		MHz

INTERNAL REFERENCE CHARACTERISTICS

The ● denotes the specifications which apply over the full operating temperature range, otherwise specifications are at T_A = 25°C. (Note 5)

SYMBOL	PARAMETER	CONDITIONS		MIN	TYP	MAX	UNITS
V_{REFIN}	Internal Reference Output Voltage	I_{OUT} = 0µA		2.043	2.048	2.053	V
	V_{REFIN} Temperature Coefficient	(Note 11)	●		±5	±20	ppm/°C
	REFIN Output Impedance				15		kΩ
	V_{REFIN} Line Regulation	V_{DD} = 4.75V to 5.25V			0.3		mV/V
	REFIN Input Voltage Range	(REFIN Overdriven) (Note 6)	●	2.008	2.048	2.088	V

REFERENCE BUFFER CHARACTERISTICS

The ● denotes the specifications which apply over the full operating temperature range, otherwise specifications are at T_A = 25°C. (Note 5)

SYMBOL	PARAMETER	CONDITIONS		MIN	TYP	MAX	UNITS
V_{REFBUF}	Reference Buffer Output Voltage	V_{REFIN} = 2.048V	●	4.090	4.096	4.102	V
	REFBUF Input Voltage Range	(REFBUF Overdriven) (Notes 6, 9)	●	4.016	4.096	4.176	V
I_{REFBUF}	REFBUF Load Current	V_{REFBUF} = 4.096V (REFBUF Overdriven) (Notes 9, 12) V_{REFBUF} = 4.096V, Sleep Mode (REFBUF Overdriven) (Note 9)	●		1.6 0.5	1.8	mA mA
V_{CM}	Common Mode Output	V_{REFBUF} = 4.096V, I_{OUT} = 0µA	●	2.028	2.048	2.068	V
	V_{CM} Output Impedance	–1mA < I_{OUT} < 1mA			15		Ω

DIGITAL INPUTS AND DIGITAL OUTPUTS

The ● denotes the specifications which apply over the full operating temperature range, otherwise specifications are at T_A = 25°C. (Note 5)

SYMBOL	PARAMETER	CONDITIONS		MIN	TYP	MAX	UNITS
$\overline{PD}$, TESTPAT, TWOLANES							
V_{IH}	High Level Input Voltage	V_{DDL} = OV_{DD} = 2.5V	●	1.7			V
V_{IL}	Low Level Input Voltage	V_{DDL} = OV_{DD} = 2.5V	●			0.6	V
I_{IN}	Digital Input Current	V_{IN} = 0V to 2.5V	●	–10		10	µA
C_{IN}	Digital Input Capacitance				3		pF
CNV^+, Single-Ended Convert Start Mode (CNV^- Tied to GND)							
V_{IH}	High Level Input Voltage	V_{DDL} = 2.5V	●	1.7			V
V_{IL}	Low Level Input Voltage	V_{DDL} = 2.5V	●			0.6	V
C_{IN}	Digital Input Capacitance				2		pF
CNV^+/CNV^-, Differential Convert Start Mode							
V_{ID}	Differential Input Voltage	(Note 13)	●	175	350	650	mV
V_{ICM}	Common Mode Input Voltage		●	0.8	1.25	1.7	V
CLK^+/CLK^- (LVDS Clock Input)							
V_{ID}	Differential Input Voltage	(Note 13)	●	175	350	650	mV
V_{ICM}	Common Mode Input Voltage		●	0.8	1.25	1.7	V
DCO^+/DCO^-, DA^+/DA^-, DB^+/DB^- (LVDS Outputs)							
V_{OD}	Differential Output Voltage	100Ω Differential Load	●	247	350	454	mV
V_{OS}	Common Mode Output Voltage	100Ω Differential Load	●	1.125	1.25	1.375	V

POWER REQUIREMENTS

The ● denotes the specifications which apply over the full operating temperature range, otherwise specifications are at T_A = 25°C. (Note 5)

SYMBOL	PARAMETER	CONDITIONS		MIN	TYP	MAX	UNITS
V_{DD}	Supply Voltage	(Note 6)	●	4.75	5	5.25	V
V_{DDL}	Supply Voltage	(Note 6)	●	2.375	2.5	2.625	V
OV_{DD}	Supply Voltage	(Note 6)	●	2.375	2.5	2.625	V
I_{VDD} I_{VDDL} I_{OVDD} $I_{POWERDOWN}$ $I_{POWERDOWN}$	Supply Current Supply Current Supply Current Power-Down Mode Current Power-Down Mode Current	15Msps Sample Rate 15Msps Sample Rate 15Msps Sample Rate Power-Down Mode (I_{VDD}) Power-Down Mode (I_{VDDL} + I_{OVDD})	● ● ● ● ●		5 31.4 8.8 1 2	6 35 10.3 20 250	mA mA mA µA µA
P_D	Power Dissipation Power-Down Mode	15Msps Sample Rate Power-Down Mode (I_{VDD} + I_{VDDL} + I_{OVDD})	● ●		125 10	144 725	mW µW
$I_{DIFFCNV}$	Increase in I_{VDDL} with Differential CNV Mode Enabled (No Increase During Power-Down)				2.1		mA
$I_{TWOLANE}$	Increase in I_{OVDD} with Two-Lane Mode Enabled (No Increase During Power-Down)				3.6		mA

ADC TIMING CHARACTERISTICS

The ● denotes the specifications which apply over the full operating temperature range, otherwise specifications are at T_A = 25°C. (Note 5)

SYMBOL	PARAMETER	CONDITIONS		MIN	TYP	MAX	UNITS
f_{SMPL}	Sampling Frequency		●	0.02		15	Msps
t_{CONV}	CNV↑ to Output Data Ready		●	54	58	63	ns
t_{ACQ}	Acquisition Time				t_{CYC} – 39		ns
t_{CYC}	Time Between Conversions		●	66.6		50,000	ns
t_{CNVH}	CNV High Time	(Note 13)	●	5			ns
t_{CNVL}	CNV Low Time	(Note 13)	●	8			ns
$t_{FIRSTCLK}$	CNV↑ to First CLK↑ from the Same Conversion	(Note 13)	●	65			ns
$t_{LASTCLK}$	CNV↑ to Last CLK↓ from the Previous Conversion	(Note 13)	●			49	ns
t_{CLKH}	CLK High Time		●	1.25			ns
t_{CLKL}	CLK Low Time		●	1.25			ns
t_{CLKDCO}	CLK to DCO Delay	(Note 13)	●	0.7	1.3	2.3	ns
t_{CLKD}	CLK to DA/DB Delay	(Note 13)	●	0.7	1.3	2.3	ns
t_{SKEW}	DCO to DA/DB skew	$t_{CLKD} – t_{CLKDCO}$ (Note 13)	●	–200	0	200	ps
t_{AP}	Sampling Delay Time	(Note 13)			0		ns
t_{JITTER}	Sampling Delay Jitter	(Note 13)			0.25		ps_{RMS}

Note 1: Stresses beyond those listed under Absolute Maximum Ratings may cause permanent damage to the device. Exposure to any Absolute Maximum Rating condition for extended periods may affect device reliability and lifetime.

Note 2: All voltage values are with respect to ground.

Note 3: When these pin voltages are taken below ground or above V_{DD}, V_{DDL} or OV_{DD}, they will be clamped by internal diodes. This product can handle input currents up to 100mA below ground or above V_{DD}, V_{DDL} or OV_{DD} without latchup.

Note 4: When this pin voltage is taken below ground, it will be clamped by an internal diode. When this pin voltage is taken above V_{DDL}, it is clamped by a diode in series with a 2k resistor. This product can handle input currents up to 100mA below ground without latchup.

Note 5: V_{DD} = 5V, V_{DDL} = 2.5V, OV_{DD} = 2.5V, f_{SMPL} = 15MHz, REFIN = 2.048V, single-ended CNV, one-lane output mode unless otherwise noted.

Note 6: Recommended operating conditions.

Note 7: Integral nonlinearity is defined as the deviation of a code from a straight line passing through the actual endpoints of the transfer curve. The deviation is measured from the center of the quantization band.

Note 8: Zero-scale error is the offset voltage measured from –0.5LSB when the output code flickers between 00 0000 0000 0000 0000 and 11 1111 1111 1111 1111. Full-scale error is the worst-case deviation of the first and last code transitions from ideal and includes the effect of offset error.

Note 9: When REFBUF is overdriven, the internal reference buffer must be turned off by setting REFIN = 0V.

Note 10: All specifications in dB are referred to a full-scale $\pm V_{REFBUF}$ differential input.

Note 11: Temperature coefficient is calculated by dividing the maximum change in output voltage by the specified temperature range.

Note 12: f_{SMPL} = 15MHz, I_{REFBUF} varies linearly with sample rate.

Note 13: Guaranteed by design, not subject to test.

TYPICAL PERFORMANCE CHARACTERISTICS

T_A = 25°C, V_{DD} = 5V, V_{DDL} = 2.5V, OV_{DD} = 2.5V, REFIN = 2.048V, f_{SMPL} = 15Msps, unless otherwise noted.

Integral Nonlinearity vs Output Code (LSB)

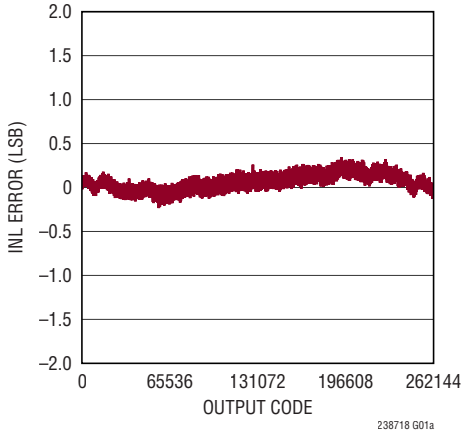

Integral Nonlinearity vs Output Code (ppm)

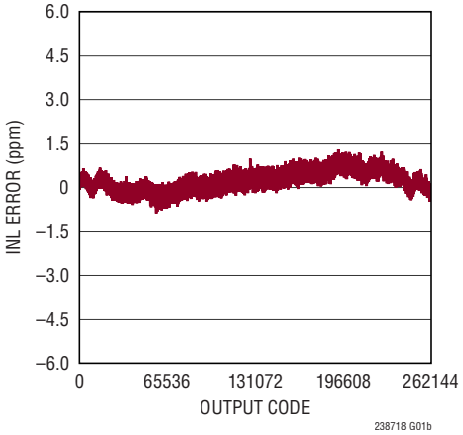

Differential Nonlinearity vs Output Code

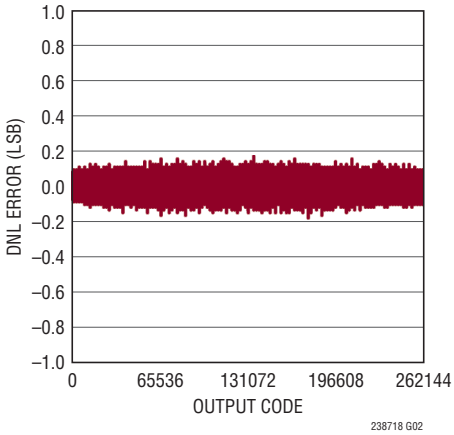

DC Histogram

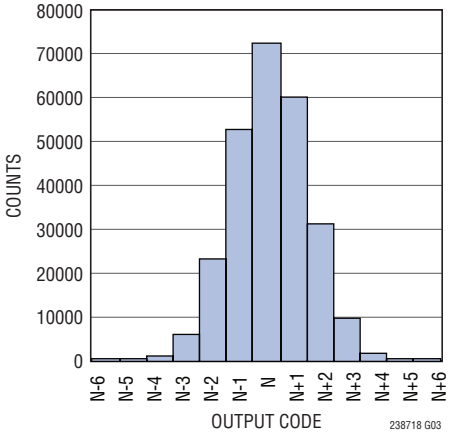

32k Point FFT f_{SMPL} = 15Msps, f_{IN} = 2kHz

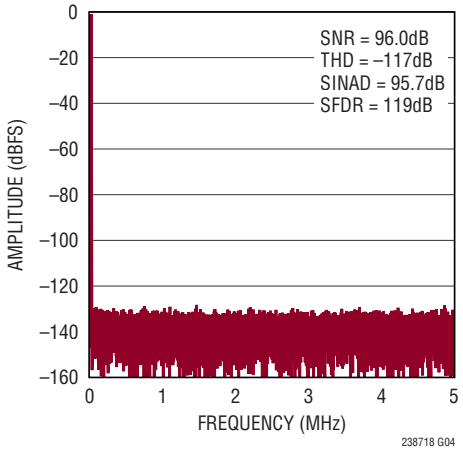

32k Point FFT f_{SMPL} = 15Msps, f_{IN} = 200kHz

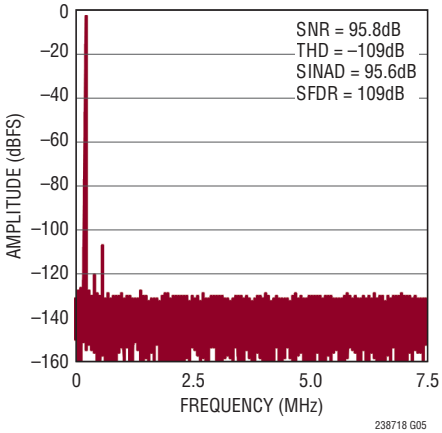

32k Point FFT f_{SMPL} = 15Msps, f_{IN} = 1MHz

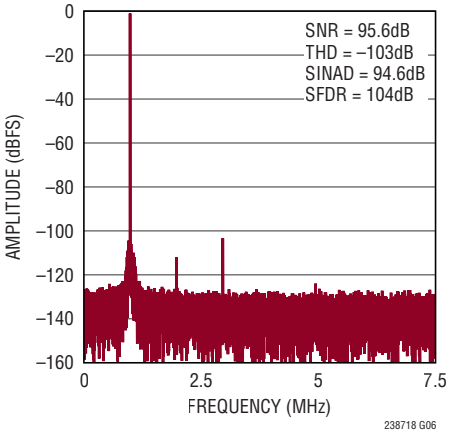

32k Point FFT f_{SMPL} = 15Msps, f_{IN} = 5MHz

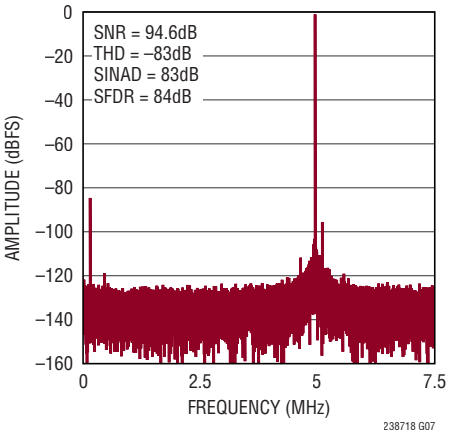

SNR, SINAD vs Input Frequency

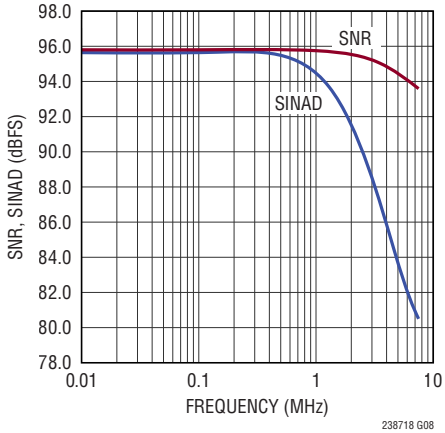

TYPICAL PERFORMANCE CHARACTERISTICS

T_A = 25°C, V_{DD} = 5V, V_{DDL} = 2.5V, OV_{DD} = 2.5V, REFIN = 2.048V, f_{SMPL} = 15Msps, unless otherwise noted.

THD vs Input Frequency and Amplitude

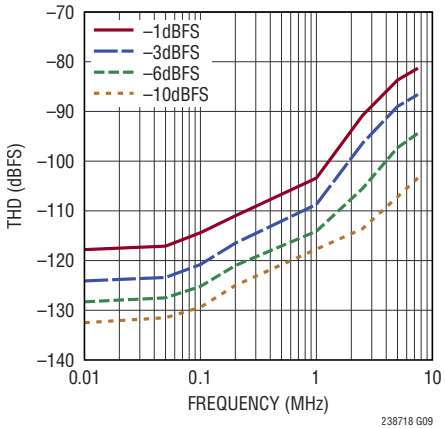

SFDR vs Input Level, f_{IN} = 2kHz

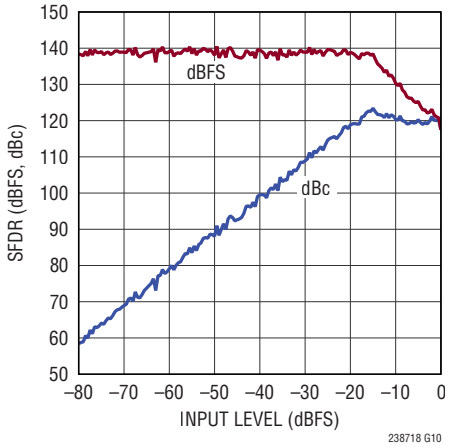

SFDR vs Input Level, f_{IN} = 1MHz

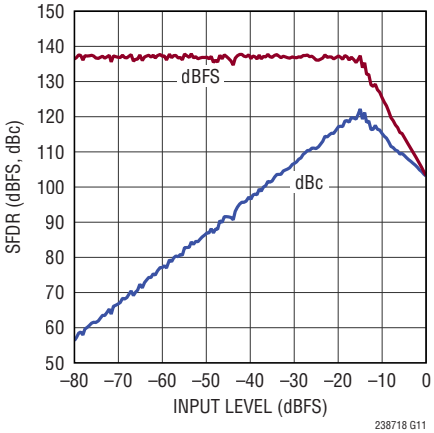

SNR, SINAD vs Temperature, f_{IN} = 2kHz, –1dBFS

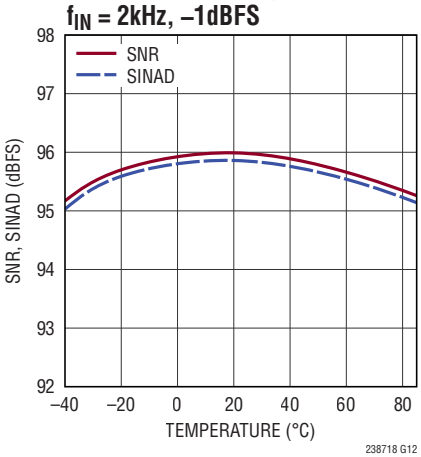

THD, Harmonics vs Temperature, f_{IN} = 2kHz, –1dBFS

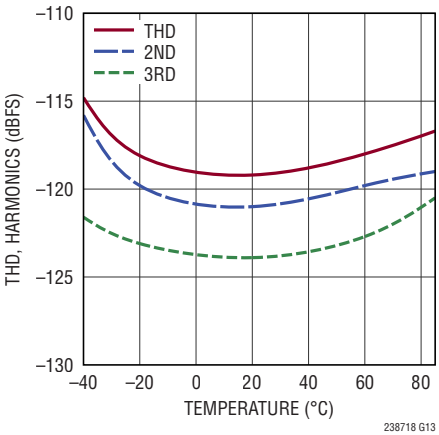

INL/DNL vs Temperature

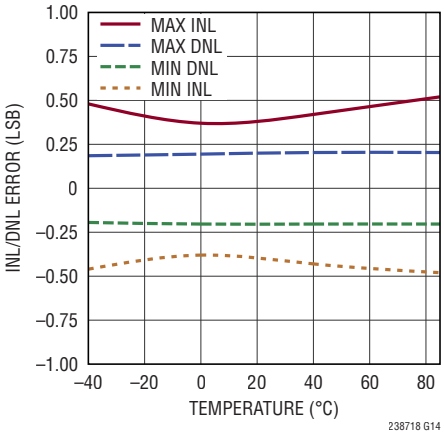

Full-Scale Error vs Temperature, REFBUF = 4.096V

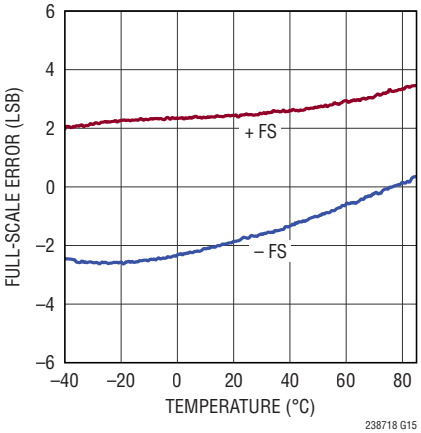

Zero-Scale Error vs Temperature

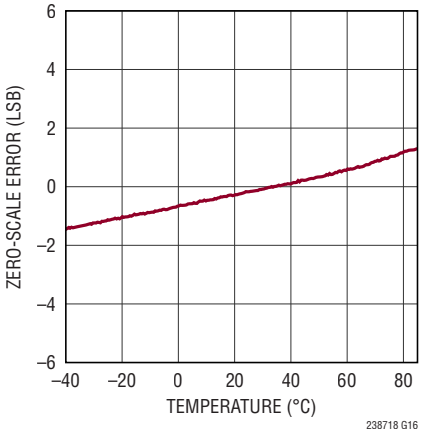

Supply Current vs Temperature

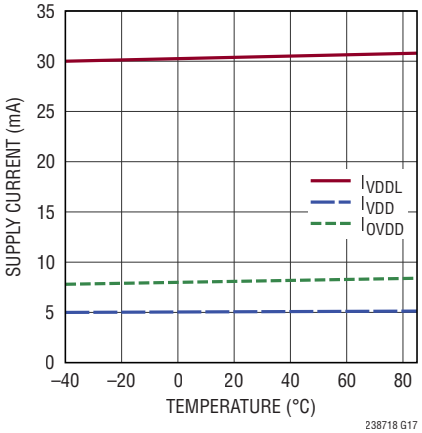

TYPICAL PERFORMANCE CHARACTERISTICS

T_A = 25°C, V_{DD} = 5V, V_{DDL} = 2.5V, OV_{DD} = 2.5V, REFIN = 2.048V, f_{SMPL} = 15Msps, unless otherwise noted.

Supply Current vs Sample Rate

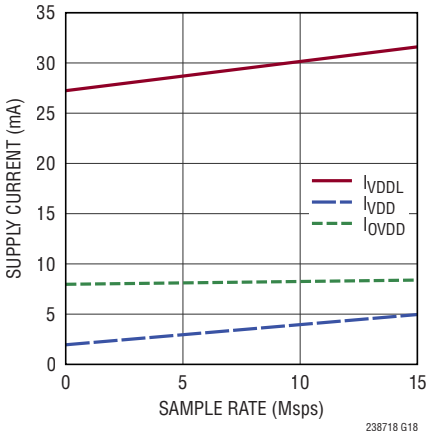

Analog Input Current vs Differential Input Voltage

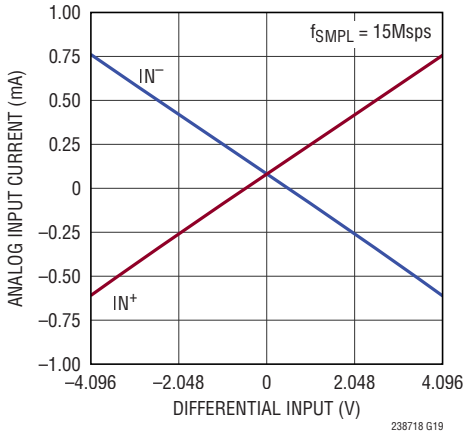

Internal Reference Output vs Temperature

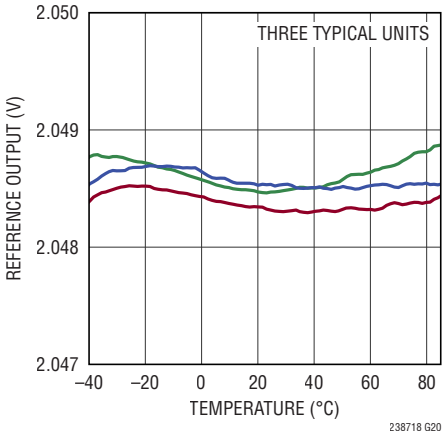

PIN FUNCTIONS

GND (Pins 1, 4, 10, 21, 26, 29): Ground. Connect to a solid ground plane in the PCB underneath the ADC.

IN+, IN– (Pins 2, 3): Positive and Negative Differential Analog Inputs. The inputs must be driven differentially and 180° out of phase, with a common mode voltage of 2.048V. The differential input range is ±4.096V (each input pin swings from 0V to 4.096V.)

REFGND (Pins 5, 6): Reference Ground. The two pins should be shorted together and connected to the reference bypass capacitor with a short, wide trace. In addition, connect the pins to the exposed pad (Pin 33). A suggested layout is shown in the ADC Reference section of the data sheet.

REFBUF (Pins 7, 8): Internal Reference Buffer Output. The output voltage of the internal 2× gain reference buffer, nominally 4.096V, is provided on this pin. The two pins should be shorted together and bypassed to REFGND with a 10µF (X7R, 0805 size) ceramic capacitor. If the internal buffer is not required, tie REFIN to GND to power down the buffer and connect an external 4.096V reference to REFBUF.

REFIN (Pin 9): Internal Reference Output/Reference Buffer Input. The output voltage of the internal reference, nominally 2.048V, is output on this pin. An external reference can be applied to REFIN if a more accurate reference is required. For increased filtering of reference noise, bypass this pin to GND using a 0.1µF or larger ceramic capacitor. If the internal reference buffer is not used, tie REFIN to GND to power down the buffer and connect an external buffered reference to REFBUF.

V_{DD} (Pins 11, 12): 5V Analog Power Supply. The range of V_{DD} is 4.75V to 5.25V. The two pins should be shorted together and bypassed to GND with 0.1µF and 10µF ceramic capacitors.

$\overline{PD}$ (Pin 13): Digital input that enables power-down mode. When $\overline{PD}$ is low, the LTC2387 enters power-down mode, and all circuitry (including the LVDS interface) is shut down. When $\overline{PD}$ is high, the part operates normally. Logic levels are determined by OV_{DD}.

TESTPAT (Pin 14): Digital input that forces the LVDS data outputs to be a test pattern. When TESTPAT is high, the digital outputs are a test pattern. When TESTPAT is low, the digital outputs are the ADC conversion result. Logic levels are determined by OV_{DD}.

DB–/DB+, DA–/DA+ (Pins 15/16, 17/18): Serial LVDS Data Outputs. In one-lane output mode, DB–/DB+ are not used and their LVDS driver is disabled to reduce power consumption.

PIN FUNCTIONS

DCO⁻/DCO⁺ (Pins 19/20): LVDS Data Clock Output. This is an echoed version of CLK⁻/CLK⁺ that can be used to latch the data outputs.

OV_{DD} (Pin 22): 2.5V Output Power Supply. The range of OV_{DD} is 2.375V to 2.625V. Bypass to GND with a 0.1µF ceramic capacitor.

CLK⁻/CLK⁺ (Pins 23/24): LVDS Clock Input. This is an externally applied clock that serially shifts out the conversion result.

TWOLANES (Pin 25): Digital input that enables two-lane output mode. When TWOLANES is high (two-lane output mode), the ADC outputs two bits at a time on DA⁻/DA⁺ and DB⁻/DB⁺. When TWOLANES is low (one-lane output mode), the ADC outputs one bit at a time on DA⁻/DA⁺, and DB⁻/DB⁺ are disabled. Logic levels are determined by V_{DDL}.

CNV⁻/CNV⁺ (Pins 27/28): Conversion Start LVDS Input. A rising edge on CNV⁺ puts the internal sample-and-hold into the hold mode and starts a conversion cycle. CNV⁺ can also be driven with a 2.5V CMOS signal if CNV⁻ is tied to GND.

V_{DDL} (Pins 30, 31): 2.5V Analog Power Supply. The range of V_{DDL} is 2.375V to 2.625V. The two pins should be shorted together and bypassed to GND with 0.1µF and 10µF ceramic capacitors.

V_{CM} (Pin 32): Common Mode Output. V_{CM}, nominally 2.048V, can be used to set the common mode of the analog inputs. Bypass to GND with a 0.1µF ceramic capacitor close to the pin. If V_{CM} is not used, the bypass capacitor is not necessary as long as the parasitic capacitance on the V_{CM} pin is under 10pF.

Exposed Pad (Pin 33): The exposed pad on the bottom of the package. Connect to the ground plane of the PCB using multiple vias.

FUNCTIONAL BLOCK DIAGRAM

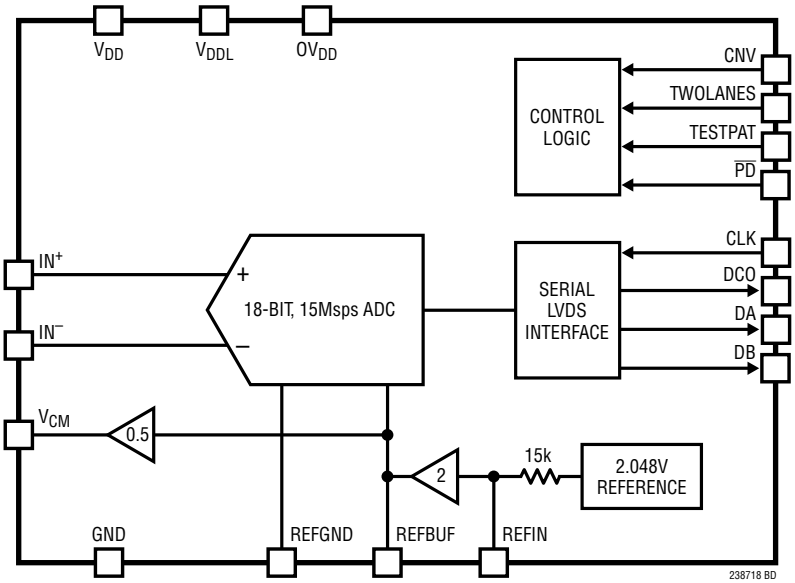

TIMING DIAGRAM

One-Lane Output Mode

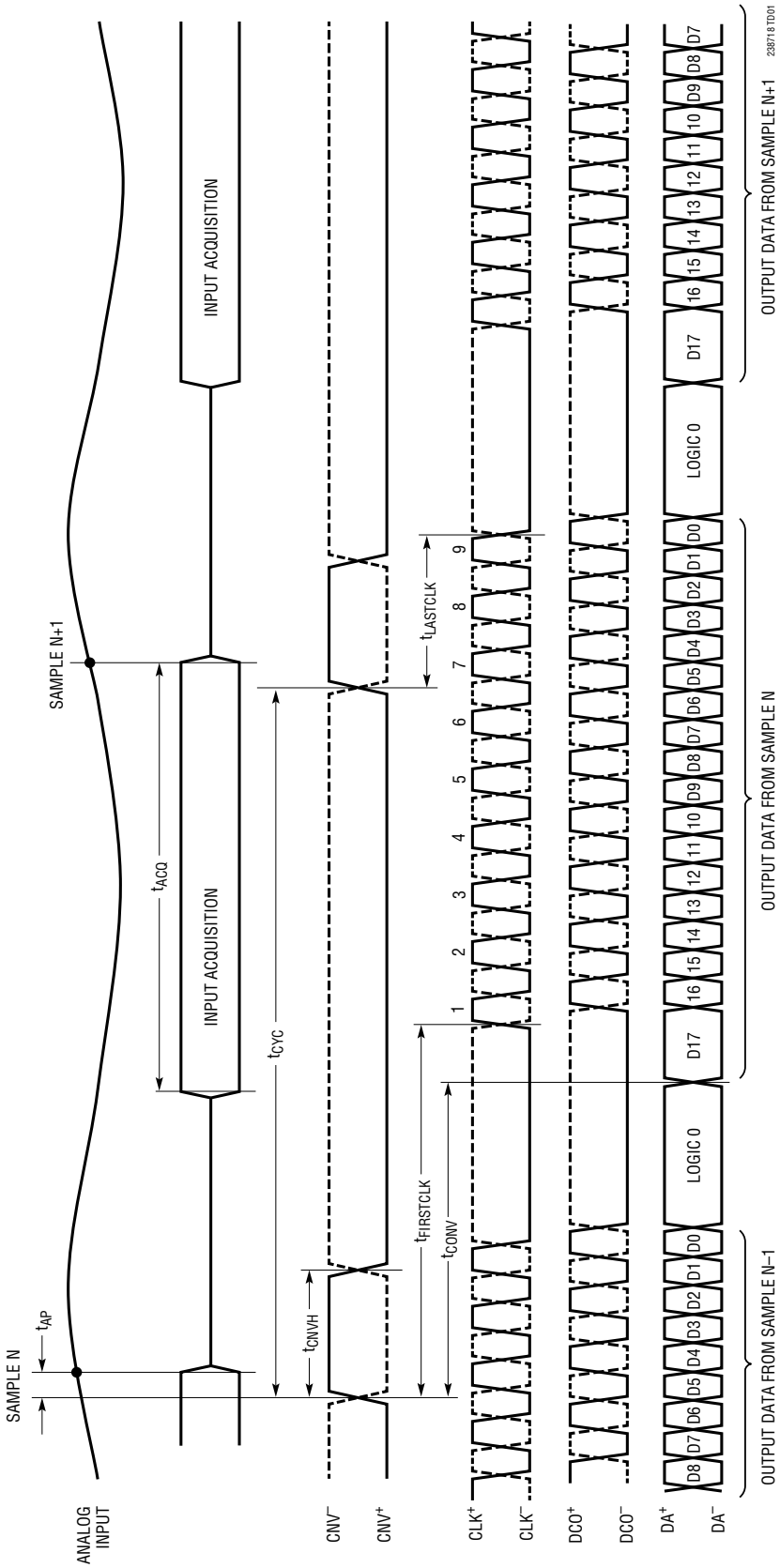

TIMING DIAGRAM

Two-Lane Output Mode

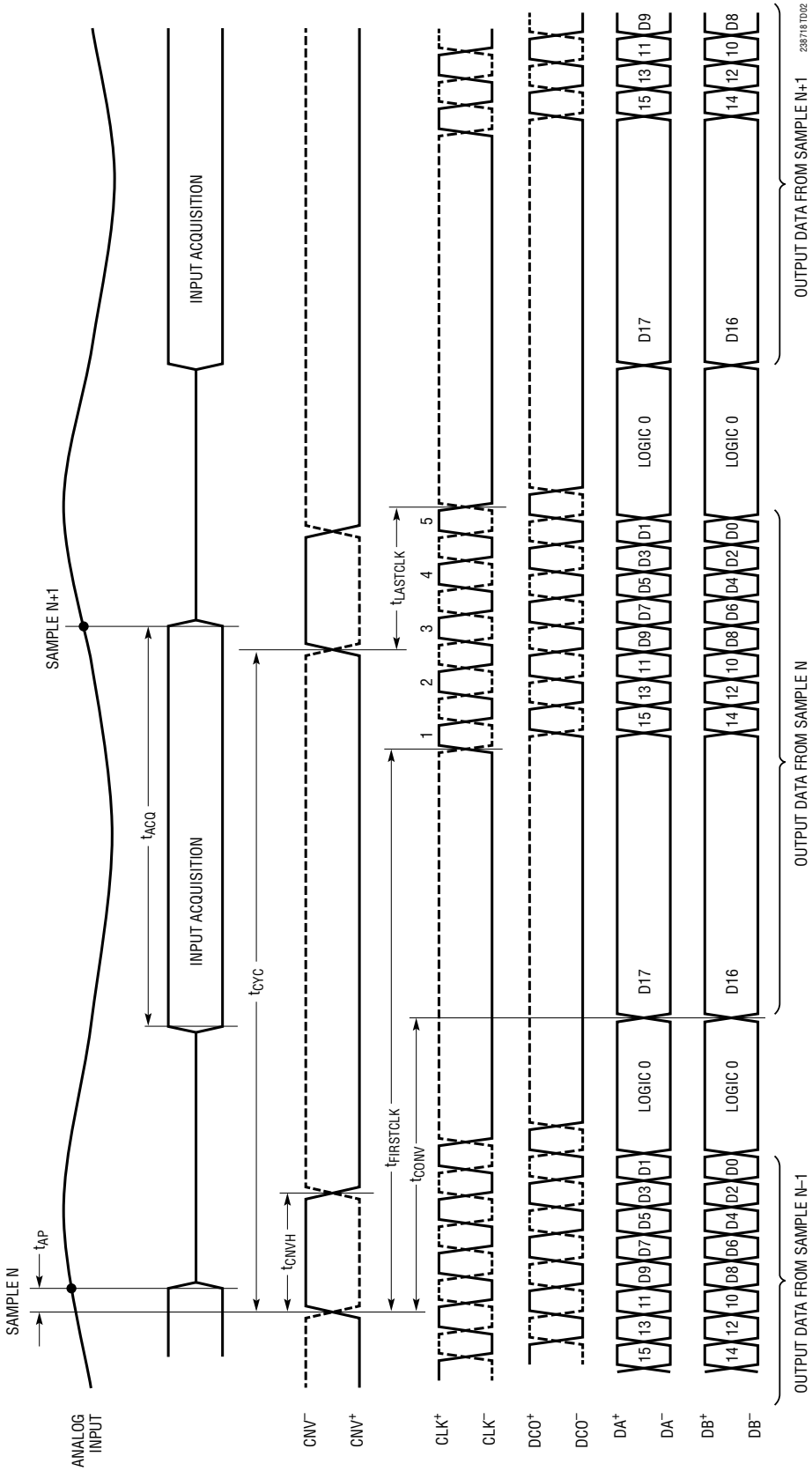

TIMING DIAGRAM

Data Output Timing

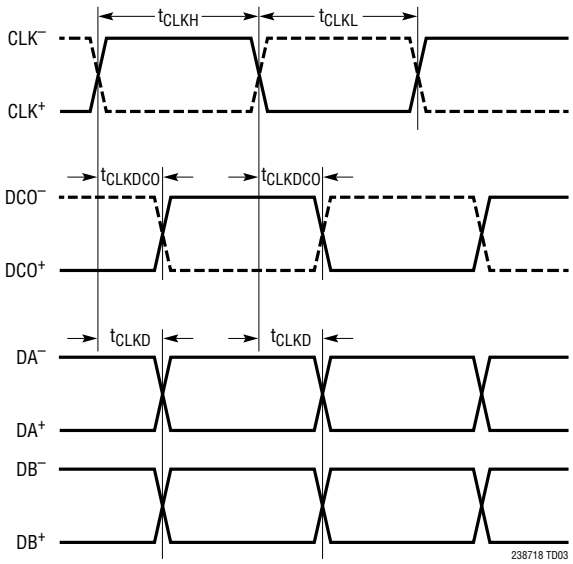

APPLICATIONS INFORMATION

OVERVIEW

The LTC2387-18 is a low noise, high speed, 18-bit successive approximation register (SAR) ADC. Operating from 5V and 2.5V supplies, the LTC2387-18 has a fully differential ±4.096V input range, making it ideal for applications that require a wide dynamic range. The LTC2387-18 achieves ±3LSB INL (maximum), no missing codes at 18-bits and 96dB SNR (typical).

The LTC2387-18 includes a precision internal 2.048V reference, with a guaranteed 0.25% initial accuracy and a ±20ppm/°C (maximum) temperature coefficient, as well as an internal reference buffer. The LTC2387-18 also has a high speed serial LVDS interface that can output one or two bits at a time. The fast 15Msps throughput with no pipeline latency makes the LTC2387-18 ideally suited for a wide variety of high speed applications. The LTC2387-18 dissipates only 125mW at 15Msps and has a power-down mode to reduce the power consumption to 10µW during inactive periods.

CONVERTER OPERATION

The LTC2387-18 operates in two phases. During the acquisition phase, the sample capacitors are connected to the analog input pins IN^+ and IN^- to sample the differential analog input voltage. A rising edge on the CNV pin initiates a conversion. During the conversion phase, the ADC is sequenced through a successive approximation algorithm, comparing the sampled input with binary-weighted fractions of the reference voltage (e.g. $V_{REFBUF}/2$, $V_{REFBUF}/4$ … $V_{REFBUF}/262144$) using a differential comparator. At the end of conversion, control logic prepares the 18-bit digital output code for serial transfer.

TRANSFER FUNCTION

The LTC2387-18 digitizes the full-scale voltage of 2× REFBUF into 2^{18} levels, resulting in an LSB size of 31.25µV with REFBUF = 4.096V. The output data is in two's complement format. The ideal transfer function is shown in Figure 1. The ideal offset binary transfer function can be obtained from the two's complement transfer function by inverting the most significant bit (MSB) of each output code.

APPLICATIONS INFORMATION

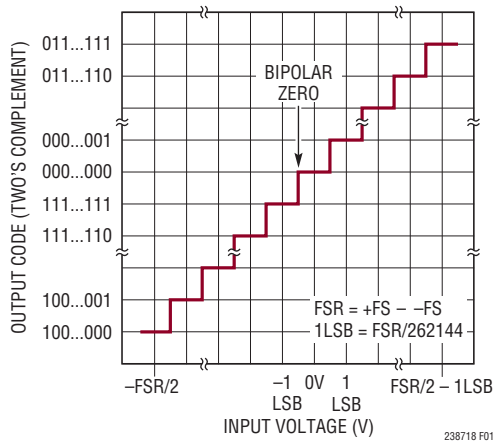

Figure 1. LTC2387-18 Transfer Function

ANALOG INPUTS

The LTC2387-18 has a fully differential ±4.096V input range. The IN^+ and IN^- pins should be driven 180 degrees out-of-phase with respect to each other, centered around a common mode voltage $(IN^+ + IN^-)/2$ that is restricted to ($V_{REFBUF}/2 \pm 0.1V$). The ADC samples and digitizes the voltage difference between the two analog input pins ($IN^+ - IN^-$), and any unwanted signal that is common to both inputs is reduced by the common mode rejection ratio (CMRR) of the ADC. The analog inputs can be modeled by the equivalent circuit shown in Figure 2. The diodes and 10Ω resistors at the input provide ESD and overdrive protection. In the acquisition phase, each input sees approximately 18pF (C_{SAMPLE}) from the sampling capacitor in series with 28Ω (R_{ON}) from the on-resistance of the sampling switch. C_{PAR} is a lumped capacitance on the order of 2pF formed primarily of diode junctions.

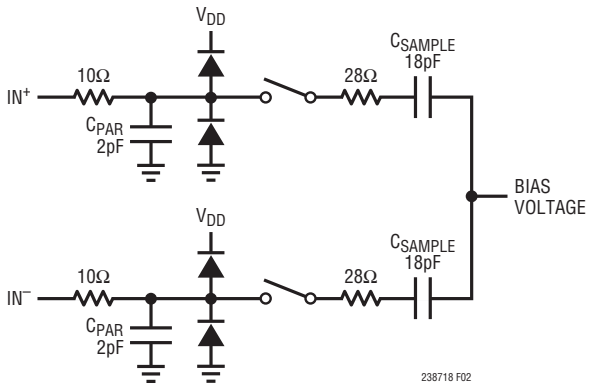

Figure 2. Equivalent Circuit for the Differential Analog Inputs of the LTC2387-18

The inputs draw a small current spike while charging the C_{SAMPLE} capacitors during acquisition. This current spike is consistent and does not depend on the previously sampled input voltage. During conversion and power-down, the analog inputs draw only a small leakage current.

Input Drive Circuits

A low impedance source can directly drive the high impedance inputs of the LTC2387-18 without gain error. A high impedance source should be buffered to minimize settling time during acquisition and to optimize the distortion performance of the ADC. Minimizing settling time is important even for DC signals because the ADC inputs draw a current spike when entering acquisition.

For best performance, a buffer amplifier should be used to drive the analog inputs of the LTC2387-18. The amplifier provides low output impedance enabling fast settling of the analog signal during the acquisition phase. It also provides isolation between the signal source and the current spike drawn by the ADC inputs when entering acquisition.

The LTC2387-18 is optimized for pulsed inputs that are fully settled when sampled, or dynamic signals up to the Nyquist frequency (7.5MHz). Input signals that change faster than 300mV/ns when they are sampled are not recommended. This is equivalent to an $8V_{P-P}$ sine wave at 12MHz.

Input Filtering

The noise and distortion of the buffer amplifier and other supporting circuitry must be considered since they add to the ADC noise and distortion. A buffer amplifier with low noise density must be selected to minimize SNR degradation. A filter network should be placed between the buffer output and ADC input to both minimize the noise contribution of the buffer and reduce disturbances reflected into the buffer from ADC sampling transients. A simple one-pole lowpass RC filter is sufficient for many applications. It is important that the RC time constant of this filter be small enough to allow the analog inputs to settle within the ADC acquisition time (t_{ACQ}), as insufficient settling can limit INL and THD performance.

High quality capacitors and resistors should be used in the RC filters since these components can add distortion.

APPLICATIONS INFORMATION

NPO type dielectric capacitors have excellent linearity. Carbon surface mount resistors can generate distortion from self-heating and from damage that may occur during soldering. Metal film surface mount resistors are much less susceptible to both problems.

Figure 3 shows a typical input drive circuit with an RC filter. The optimal values for R and C are application-specific and may require experimentation. Setting R = 24.9Ω gives good performance over a wide range of conditions.

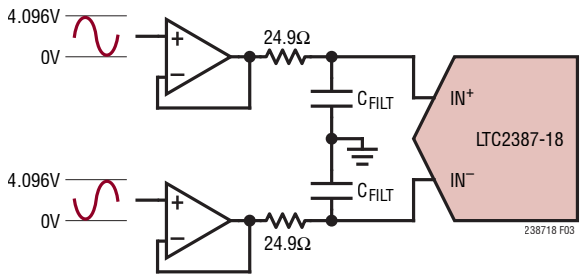

Figure 3. Typical Input Drive Circuit

The value for C_{FILT} involves a trade off: larger values give better noise, and smaller values give better full-scale error. Figure 4 shows a range of capacitor values to consider as a starting point based on the sample rate.

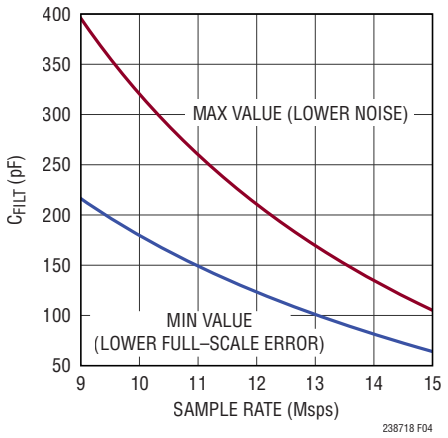

Figure 4. Suggested Range of C_{FILT} Values vs Sample Rate

Input Currents

One of the biggest challenges in coupling an amplifier to the LTC2387-18 is in dealing with current spikes drawn by analog inputs at the start of each acquisition phase.

The analog inputs may be modeled as a switched capacitor load on the drive circuit. A drive circuit may rely partially on attenuating switched-capacitor current spikes with small filter capacitors placed directly at the ADC inputs and partially on the driver amplifier having sufficient bandwidth to recover from the residual disturbance. Amplifiers optimized for DC performance may not have sufficient bandwidth to fully recover at the ADC's maximum conversion rate, which can produce nonlinearity and other errors. Coupling filter circuits may be classified in two broad categories:

Fully Settled – This case is characterized by filter time constants and an overall settling time that are considerably shorter than the sample period. When acquisition begins, the coupling filter is disturbed. For a typical first order RC filter, the disturbance will look like an initial step with an exponential decay. The amplifier will have its own response to the disturbance, which may include ringing. If the input settles completely (to within the accuracy of the LTC2387-18), the disturbance will not contribute any error.

Partially Settled – In this case, the beginning of acquisition causes a disturbance of the coupling filter, which then begins to settle out towards the nominal input voltage. However, acquisition ends (and the conversion begins) before the input settles to its final value. This generally produces a gain error, but as long as the settling is linear, no distortion is produced. The coupling filter's response is affected by the amplifier's output impedance and other parameters. A linear settling response to fast switched-capacitor current spikes can NOT always be assumed for precision, low bandwidth amplifiers. The coupling filter serves to attenuate the current spikes' high-frequency energy before it reaches the amplifier.

APPLICATIONS INFORMATION

ADC REFERENCE

The internal reference circuitry of the LTC2387-18 is shown in Figure 5. There is a low noise, low drift (20ppm/°C), bandgap reference connected to REFIN (Pin 9). An internal reference buffer gains the REFIN voltage by 2× to 4.096V at REFBUF (Pins 7, 8). The voltage difference between REFBUF and REFGND determines the full-scale input range of the ADC. The reference and reference buffer can also be externally driven if desired.

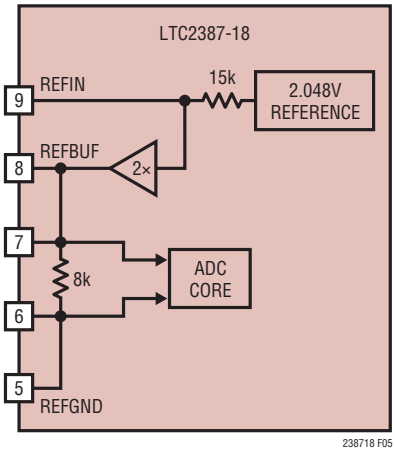

Figure 5. LTC2387-18 Internal Reference Circuitry

Internal Reference with Internal Reference Buffer

To use the internal reference and internal reference buffer, bypass REFIN to GND with a 0.1µF ceramic capacitor (Figure 6). Bypass REFBUF to REFGND with a single 10µF (X7R, 0805 size) ceramic capacitor. The REFBUF capacitor should be as close as possible to the LTC2387-18 package to minimize wiring inductance. Do not place this capacitor on the opposite side of the board. Adding a second, smaller capacitor in parallel with the 10µF may degrade performance and is not recommended.

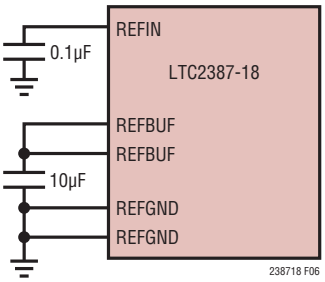

Figure 6. Configuration for Using the Internal Reference

Figure 7 shows a suggested layout for the REFBUF capacitor. The capacitor should be connected to REFBUF and REFGND through short, wide traces. REFGND should also be connected with a wide trace to the grounded exposed pad (Pin 33).

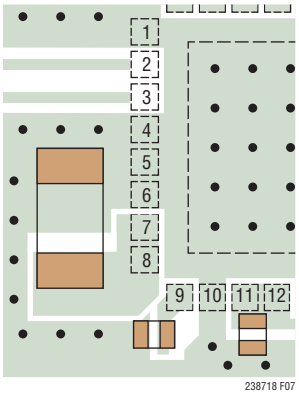

Figure 7. Suggested REFBUF Bypass Capacitor Layout

APPLICATIONS INFORMATION

External Reference with Internal Reference Buffer

If more accuracy and/or lower drift is desired, REFIN can be directly overdriven by an external 2.048V reference as shown in Figure 8. Linear Technology offers a portfolio of high performance references designed to meet the needs of many applications. With its small size, low power, and high accuracy, the LTC6655-2.048 is well suited for use with the LTC2387-18 when overdriving the internal reference. The LTC6655-2.048 offers 0.025% (max) initial accuracy and 2ppm/°C (max) temperature coefficient for high precision applications. Bypassing the LTC6655-2.048 with a 2.7µF to 10µF ceramic capacitor close to the REFIN pin is recommended.

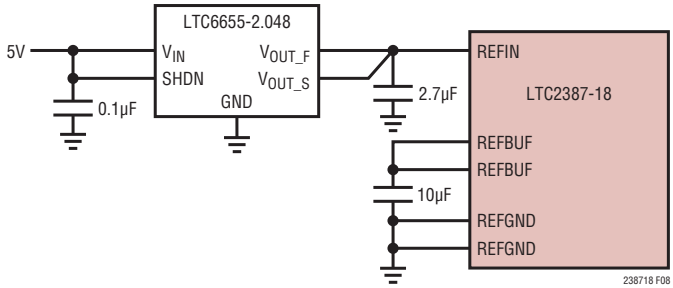

Figure 8. Using the LTC6655-2.048 as an External Reference

External Reference Buffer

The internal reference buffer can also be overdriven with an external 4.096V reference at REFBUF as shown in Figure 9. To do so, REFIN must be grounded to disable the reference buffer. The external reference must have a fast transient response and be able to drive the 0.5mA to 1.6mA load at the REFBUF pin. The LTC6655-4.096 is recommended when overdriving REFBUF.

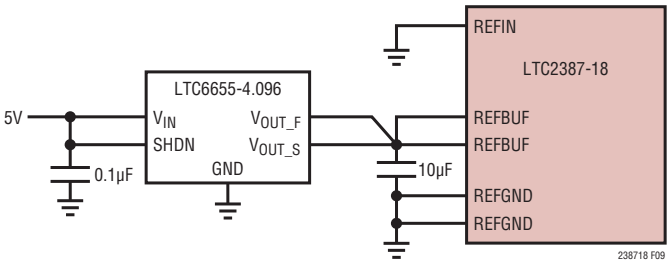

Figure 9. Overdriving REFBUF Using the LTC6655-4.096

Common Mode Output

The V_{CM} pin is an output that provides one-half the voltage present on the REFBUF pin. This voltage can be used to set the common mode of a differential amplifier driving the analog inputs. Bypass V_{CM} to GND with a 0.1µF ceramic capacitor. If V_{CM} is not used it can be left floating, but the parasitic capacitance on the pin needs to be under 10pF.

The V_{CM} output has 1/f noise which for most driver circuits will be removed by the ADC common mode rejection ratio. V_{CM} is not recommended for single-ended to differential circuits that pass the V_{CM} noise to only one ADC input.

DYNAMIC PERFORMANCE

Fast Fourier Transform (FFT) techniques are used to test the ADC's frequency response, distortion and noise at the rated throughput. By applying a low distortion sine wave and analyzing the digital output using an FFT algorithm, the ADC's spectral content can be examined for frequencies outside the fundamental. The LTC2387-18 provides guaranteed tested limits for both AC distortion and noise measurements.

APPLICATIONS INFORMATION

Signal-to-Noise and Distortion Ratio (SINAD)

The signal-to-noise and distortion ratio (SINAD) is the ratio between the RMS amplitude of the fundamental input frequency and the RMS amplitude of all other frequency components at the A/D output. The output is band-limited to frequencies from above DC and below half the sampling frequency. Figure 10 shows that the LTC2387-18 achieves a typical SINAD of 95.7dB at a 15MHz sampling rate with a 2kHz input.

Signal-to-Noise Ratio (SNR)

The signal-to-noise ratio (SNR) is the ratio between the RMS amplitude of the fundamental input frequency and the RMS amplitude of all other frequency components except the first five harmonics and DC. Figure 10 shows that the LTC2387-18 achieves a typical SNR of 96dB at a 15MHz sampling rate with a 2kHz input.

Total Harmonic Distortion (THD)

Total Harmonic Distortion (THD) is the ratio of the RMS sum of all harmonics of the input signal to the fundamental itself. The out-of-band harmonics alias into the frequency band between DC and half the sampling frequency ($f_{SMPL}/2$). THD is expressed as:

$$THD = 20\log\frac{\sqrt{V2^2 + V3^2 + V4^2 + \ldots + V_n^{\,2}}}{V1}$$

where V1 is the RMS amplitude of the fundamental frequency and V2 through V_n are the amplitudes of the second through nth harmonics. Figure 10 shows that the LTC2387-18 achieves a typical THD of –117dB at a 15MHz sampling rate with a 2kHz input.

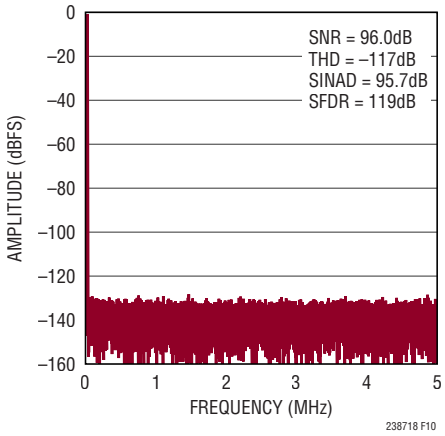

Figure 10. 32k Point FFT of the LTC2387-18, f_{SMPL} = 15Msps, f_{IN} = 2kHz

POWER CONSIDERATIONS

The LTC2387-18 requires three power supplies: V_{DD} (5V), V_{DDL} (2.5V), and OV_{DD} (2.5V). Bypass V_{DD} to GND with a 0.1µF ceramic capacitor close to the pair of pins and a 10µF ceramic capacitor in parallel. Bypass V_{DDL} to GND with a 0.1µF ceramic capacitor close to the pair of pins and a 10µF ceramic capacitor in parallel. OV_{DD} can come from the same source as V_{DDL} but it should be isolated by a ferrite bead and have its own 0.1µF bypass capacitor.

Power Supply Sequencing

The LTC2387-18 does not have any specific power supply sequencing requirements. Care should be taken to adhere to the maximum voltage relationships described in the Absolute Maximum Ratings section. The LTC2387-18 has a power-on-reset (POR) circuit that will reset the LTC2387-18 at initial power-up or whenever V_{DD} or V_{DDL} drops well below their minimum values. Once the supply voltage re-enters the nominal supply voltage range, the POR will reinitialize the ADC.

APPLICATIONS INFORMATION

Power-Down Mode

When $\overline{PD}$ is pulled low, LTC2387-18 enters power-down mode. In this state, all internal functions, including the reference and LVDS outputs, are turned off and subsequent conversion requests are ignored. The power consumption drops to a typical value of 10µW. This mode can be used if the LTC2387-18 is inactive for a long period of time and the user wants to minimize power dissipation.

The amount of time required to recover from power-down mode depends on how REFBUF is configured. When using the internal reference buffer with a 10µF bypass capacitor, the ADC will stabilize after 20ms. If REFBUF is externally driven, the recovery time can be significantly less.

TIMING AND CONTROL

CNV Timing

The LTC2387-18 conversion is controlled by the CNV^+ and CNV^- inputs. CNV^+/CNV^- can be driven directly with an LVDS signal. Alternatively, CNV^+ can be driven with a 0V to 2.5V CMOS signal when CNV^- is tied to GND. A rising edge on CNV^+ will sample the analog inputs and start a conversion. The pulse width of CNV^+ should meet the t_{CNVH} and t_{CNVL} specifications in the timing table.

After the LTC2387-18 is powered on, or exits power-down mode, conversion data is invalid for the first two conversion cycles. Subsequent results are accurate as long as the time between conversions meets the t_{CYC} specification.

If the analog input signal has not completely settled when it is sampled, the ADC noise performance will be affected by jitter on the rising edge of CNV^+. In this case the rising edge of CNV^+ should be driven by a clean low jitter signal. Note that the ADC is less sensitive to jitter on the falling edge of CNV^+.

In applications that are insensitive to jitter, CNV can be driven directly from an FPGA.

Internal Conversion Clock

The LTC2387-18 has an internal clock that is trimmed to achieve a maximum conversion time of 63ns. With a typical acquisition time of 27.7ns, throughput performance of 15Msps is guaranteed.

DIGITAL INTERFACE

The LTC2387-18 has a serial LVDS digital interface that is easy to connect to an FPGA. Three LVDS pairs are required: $CLK^{\pm}$, $DCO^{\pm}$, and $DA^{\pm}$. A fourth LVDS pair, $DB^{\pm}$, is optional (Figure 11).

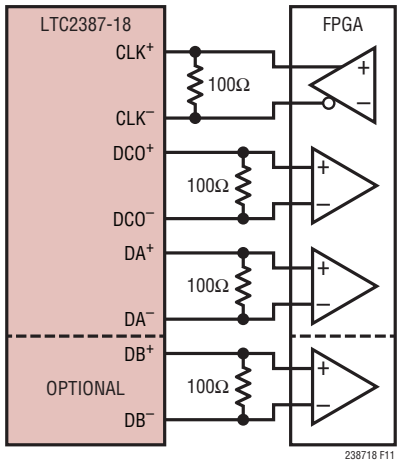

Figure 11. Digital Output Interface to an FPGA

APPLICATIONS INFORMATION

The LVDS signals should be routed on the PC board as 100Ω differential transmission lines and terminated at the receiver with 100Ω resistors.

A conversion is started by the rising edge of CNV+. When the conversion is complete, the most-significant data bit is output on DA±. Data is then ready to be shifted out by applying a burst of nine clock pulses to the CLK± input. The data on DA± is updated by every edge of CLK±. An echoed version of CLK± is output on DCO±. The edges of DA± and DCO± are aligned, so DCO± can be used to latch DA± in the FPGA. The timing of a single conversion is shown in Figure 12.

Data must be clocked out after the current conversion is complete, and before the next conversion finishes. The valid time window for clocking out data is shown in Figure 13. Note that it is allowed to be still clocking out data when the next conversion begins.

Two-Lane Output Mode

At high sample rates the required LVDS interface data rate can reach >400Mbps. Most FPGAs can support this, but if a lower data rate is desired, the two-lane output mode can be used. When the TWOLANES input pin is tied high,

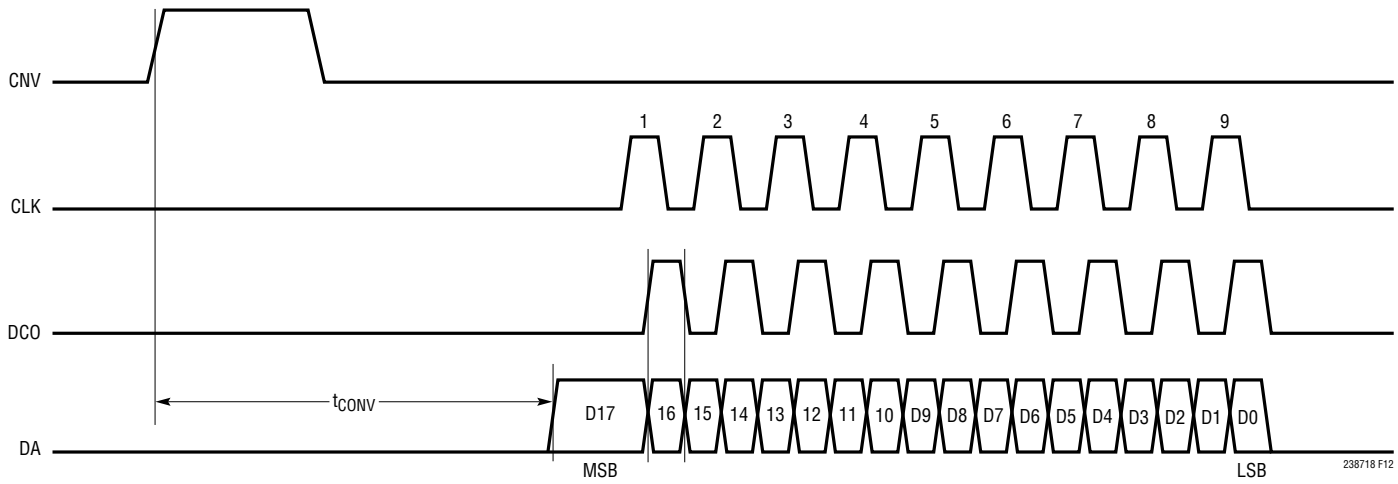

Figure 12. Timing Diagram for a Single Conversion in One-Lane Mode

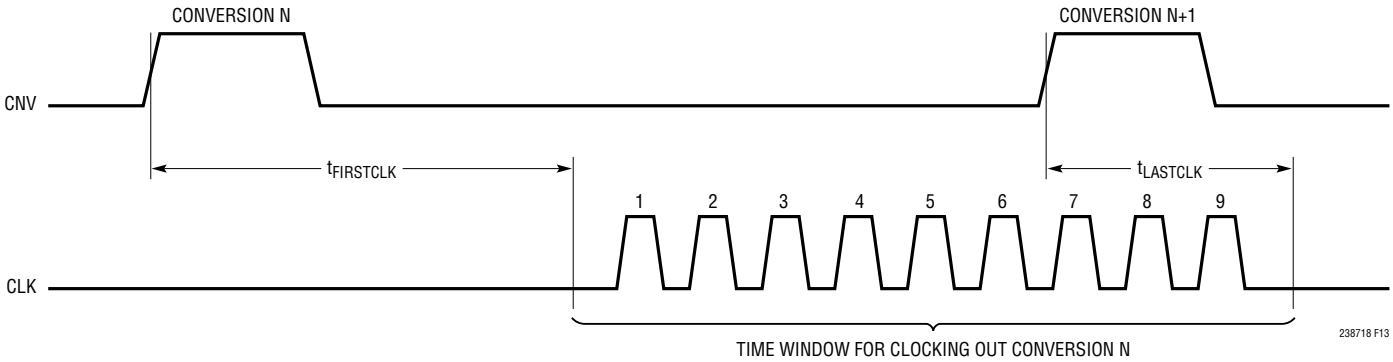

Figure 13. Valid Time Window for Clocking Out Data

APPLICATIONS INFORMATION

the optional LVDS output DB± is enabled, and data is output two bits at a time on DA± and DB±. Enabling the DB± output increases the supply current from OV_{DD} by about 3.6mA. In two-lane mode, five clock pulses are required for CLK± (see Timing Diagrams).

Output Test Patterns

To allow in-circuit testing of the digital interface to the ADC, there is a test mode that forces the ADC data outputs to known values:

One-Lane Mode: 10 1000 0001 1111 1100

Two-Lane Mode: 11 0011 0000 1111 1100

The test pattern is enabled when the TESTPAT pin is brought high.

BOARD LAYOUT

The LTC2387-18 requires a printed circuit board with a clean unbroken ground plane. A multilayer board with an internal ground plane in the first layer beneath the ADC is recommended. Layout for the printed circuit board should ensure that digital and analog signal lines are separated as much as possible. In particular, care should be taken not to run any digital track alongside an analog signal track or underneath the ADC.

High quality ceramic bypass capacitors should be used at the V_{DD}, V_{DDL}, OV_{DD}, V_{CM}, REFIN, and REFBUF pins. Bypass capacitors must be located as close to the pins as possible. Size 0402 ceramic capacitors are recommended (except for REFBUF). The traces connecting the pins and bypass capacitors must be kept short and should be made as wide as possible.

Of particular importance is the capacitor between REFBUF and REFGND, which should be a 10µF (X7R, 0805 size) ceramic capacitor. This capacitor should be on the same side of the circuit board as the ADC, and as close to the device as possible. Adding a second, smaller capacitor in parallel with the 10µF may degrade performance and is not recommended.

The analog inputs, convert start, and digital outputs should not be routed next to each other. Ground fill and grounded vias should be used as barriers to isolate these signals from each other.

Exposed Package Pad

For good electrical and thermal performance, the exposed pad on the bottom of the package must be soldered to a large grounded pad on the PC board. This pad should be connected to the internal ground planes by an array of vias.

Mechanical Stress Shift

The mechanical stress of mounting a part to a board can cause subtle changes to the SNR and internal voltage reference. The best soldering method is to use IR reflow or convection soldering with a controlled temperature profile. Hand soldering with a heat gun or a soldering iron is not recommended.

PACKAGE DESCRIPTION

Please refer to http://www.linear.com/designtools/packaging/ for the most recent package drawings.

UH Package
32-Lead Plastic QFN (5mm × 5mm)
(Reference LTC DWG # 05-08-1693 Rev D)

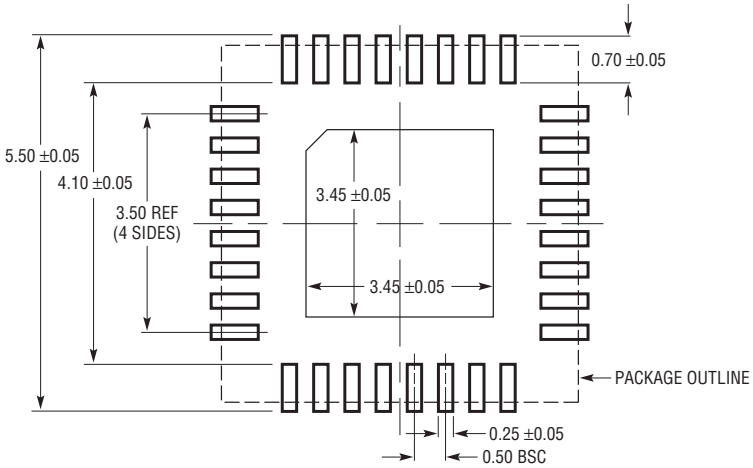

RECOMMENDED SOLDER PAD LAYOUT
APPLY SOLDER MASK TO AREAS THAT ARE NOT SOLDERED

BOTTOM VIEW—EXPOSED PAD

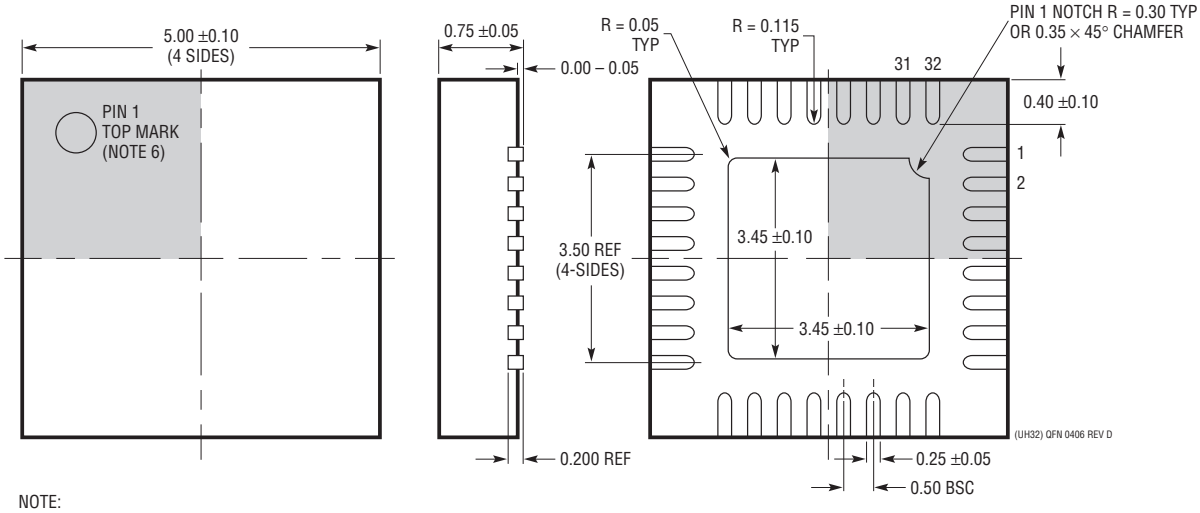

NOTE:
1. DRAWING PROPOSED TO BE A JEDEC PACKAGE OUTLINE M0-220 VARIATION WHHD-(X) (TO BE APPROVED)
2. DRAWING NOT TO SCALE
3. ALL DIMENSIONS ARE IN MILLIMETERS
4. DIMENSIONS OF EXPOSED PAD ON BOTTOM OF PACKAGE DO NOT INCLUDE MOLD FLASH. MOLD FLASH, IF PRESENT, SHALL NOT EXCEED 0.20mm ON ANY SIDE
5. EXPOSED PAD SHALL BE SOLDER PLATED
6. SHADED AREA IS ONLY A REFERENCE FOR PIN 1 LOCATION ON THE TOP AND BOTTOM OF PACKAGE

Information furnished by Linear Technology Corporation is believed to be accurate and reliable. However, no responsibility is assumed for its use. Linear Technology Corporation makes no representation that the interconnection of its circuits as described herein will not infringe on existing patent rights.

TYPICAL APPLICATION

Input Drive Circuit with Low Distortion up to 1MHz

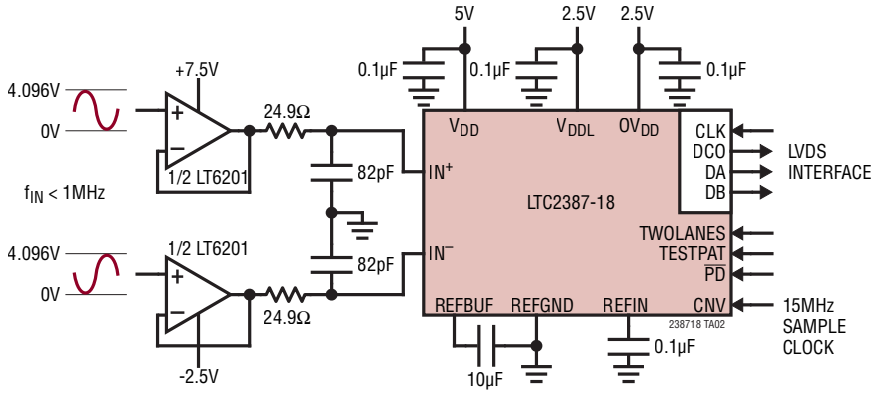

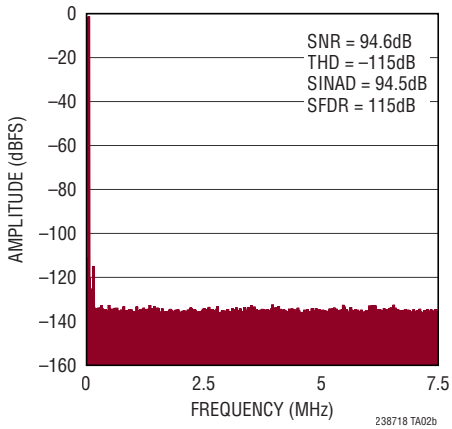

128k Point FFT, f_{SMPL} = 15Msps, f_{IN} = 50kHz

Low Power, Low Noise Input Drive Circuit for Signals up to 8kHz

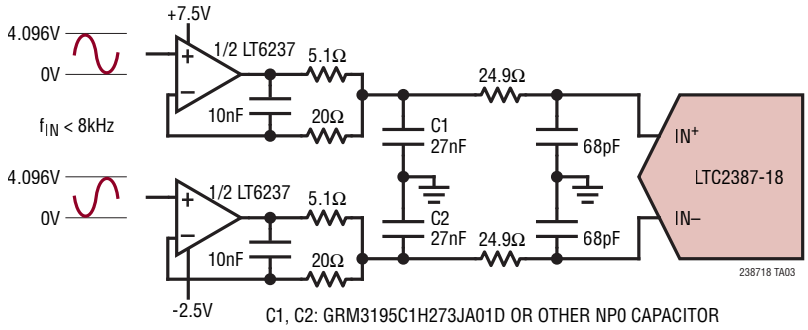

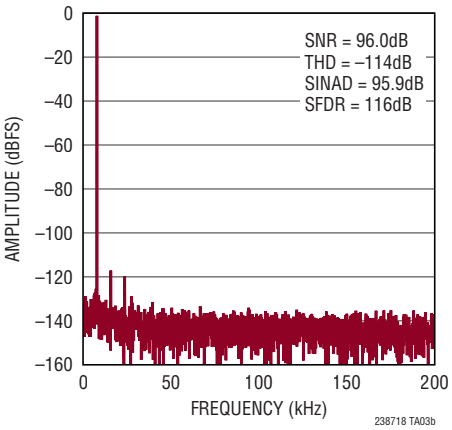

128k Point FFT, f_{SMPL} = 15Msps, f_{IN} = 8kHz (Zoomed View)

RELATED PARTS

PART NUMBER	DESCRIPTION	COMMENTS
ADCs		
LTC2378-20	20-Bit, 1Msps, Low Power SAR ADC	104dB SNR, –125dB THD, 21mW at 1Msps
LTC2389-18	18-Bit, 2.5Msps SAR ADC	99.8dB SNR, –116dB THD, ±3LSB INL (Max)
LTC2271	16-Bit, 20Msps Serial Dual ADC	84.1dB SNR, 99dB SFDR, 92mW per Channel
References		
LTC6655	Precision Low Drift Low Noise Buffered Reference	5V/2.5V/2.048V/1.2V, 2ppm/°C, 0.25ppm Peak-to-Peak Noise, MSOP-8 Package
LTC6652	Precision Low Drift Low Noise Buffered Reference	5V/2.5V/2.048V/1.2V, 5ppm/°C, 2.1ppm Peak-to-Peak Noise, MSOP-8 Package
Amplifiers		
LT6200	Low Noise Op-Amp	0.95nV/√Hz, Up to 1.6GHz GBW

Linear Technology Corporation
1630 McCarthy Blvd., Milpitas, CA 95035-7417
(408) 432-1900 • FAX: (408) 434-0507 • www.linear.com/LTC2387-18
LT 0915 • PRINTED IN USA
© LINEAR TECHNOLOGY CORPORATION 2015