December 2014

FCU4300N80Z

N-Channel SuperFET® II MOSFET

800 V, 1.6 A, 4.3 Ω

Features

- $R_{DS(on)}$ = 3.4 Ω (Typ.)
- Ultra Low Gate Charge (Typ. Q_g = 6.8 nC)
- Low E_{oss} (Typ. 0.8 uJ @ 400V)
- Low Effective Output Capacitance (Typ. $C_{oss(eff.)}$ = 36 pF)
- 100% Avalanche Tested
- RoHS Compliant
- ESD Improved Capability

Applications

- AC - DC Power Supply
- LED Lighting

Description

SuperFET® II MOSFET is Fairchild Semiconductor's brand-new high voltage super-junction (SJ) MOSFET family that is utilizing charge balance technology for outstanding low on-resistance and lower gate charge performance. This technology is tailored to minimize conduction loss, provide superior switching performance, dv/dt rate and higher avalanche energy. Consequently, SuperFET II MOSFET is very suitable for the switching power applications such as Audio, Laptop adapter, Lighting, ATX power and industrial power applications.

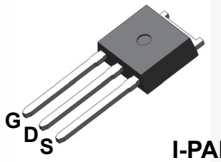

I-PAK

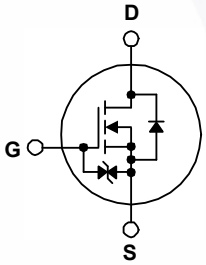

Absolute Maximum Ratings T_C = 25°C unless otherwise noted.

Symbol	Parameter		FCU4300N80Z	Unit
V_{DSS}	Drain to Source Voltage		800	V
V_{GSS}	Gate to Source Voltage	- DC	±20	V
		- AC (f > 1 Hz)	±30	
I_D	Drain Current	- Continuous (T_C = 25°C)	1.6	A
		- Continuous (T_C = 100°C)	1.0	
I_{DM}	Drain Current	- Pulsed (Note 1)	3.2	A
E_{AS}	Single Pulsed Avalanche Energy	(Note 2)	8.2	mJ
I_{AR}	Avalanche Current	(Note 1)	0.32	A
E_{AR}	Repetitive Avalanche Energy	(Note 1)	0.28	mJ
dv/dt	MOSFET dv/dt		100	V/ns
	Peak Diode Recovery dv/dt	(Note 3)	20	
P_D	Power Dissipation	(T_C = 25°C)	27.8	W
		- Derate Above 25°C	0.22	W/°C
T_J, T_{STG}	Operating and Storage Temperature Range		-55 to +150	°C
T_L	Maximum Lead Temperature for Soldering, 1/8" from Case for 5 Seconds		300	°C

Thermal Characteristics

Symbol	Parameter	FCU4300N80Z	Unit
$R_{\theta JC}$	Thermal Resistance, Junction to Case, Max.	4.5	°C/W
$R_{\theta JA}$	Thermal Resistance, Junction to Ambient, Max.	100	

©2014 Fairchild Semiconductor Corporation

Package Marking and Ordering Information

Part Number	Top Mark	Package	Packing Method	Reel Size	Tape Width	Quantity
FCU4300N80Z	FCU430080Z	IPAK	Tube	N/A	N/A	75 units

Electrical Characteristics T_C = 25°C unless otherwise noted.

Symbol	Parameter	Test Conditions	Min.	Typ.	Max.	Unit
Off Characteristics						
BV_{DSS}	Drain to Source Breakdown Voltage	V_{GS} = 0 V, I_D = 1 mA, T_J = 25°C	800	-	-	V
ΔBV_{DSS} / ΔT_J	Breakdown Voltage Temperature Coefficient	I_D = 1 mA, Referenced to 25°C	-	0.85	-	V/°C
I_{DSS}	Zero Gate Voltage Drain Current	V_{DS} = 800 V, V_{GS} = 0 V	-	-	25	μA
		V_{DS} = 640 V, V_{GS} = 0 V, T_C = 125°C	-	-	250	
I_{GSS}	Gate to Body Leakage Current	V_{GS} = ±20 V, V_{DS} = 0 V	-	-	±10	μA
On Characteristics						
$V_{GS(th)}$	Gate Threshold Voltage	V_{GS} = V_{DS}, I_D = 0.16 mA	2.5	-	4.5	V
$R_{DS(on)}$	Static Drain to Source On Resistance	V_{GS} = 10 V, I_D = 0.8 A	-	3.4	4.3	Ω
g_{FS}	Forward Transconductance	V_{DS} = 20 V, I_D = 0.8 A	-	0.52	-	S
Dynamic Characteristics						
C_{iss}	Input Capacitance	V_{DS} = 100 V, V_{GS} = 0 V, f = 1 MHz	-	267	355	pF
C_{oss}	Output Capacitance		-	12	16	pF
C_{rss}	Reverse Transfer Capacitance		-	0.78	-	pF
C_{oss}	Output Capacitance	V_{DS} = 480 V, V_{GS} = 0 V, f = 1 MHz	-	6.2	-	pF
$C_{oss(eff.)}$	Effective Output Capacitance	V_{DS} = 0 V to 480 V, V_{GS} = 0 V	-	36	-	pF
$Q_{g(tot)}$	Total Gate Charge at 10V	V_{DS} = 640 V, I_D = 1.6 A, V_{GS} = 10 V (Note 4)	-	6.8	8.8	nC
Q_{gs}	Gate to Source Gate Charge		-	1.38	-	nC
Q_{gd}	Gate to Drain “Miller” Charge		-	3.0	-	nC
ESR	Equivalent Series Resistance	f = 1 MHz	-	2.9	-	Ω
Switching Characteristics						
$t_{d(on)}$	Turn-On Delay Time	V_{DD} = 400 V, I_D = 1.6 A, V_{GS} = 10 V, R_g = 4.7 Ω (Note 4)	-	10	30	ns
t_r	Turn-On Rise Time		-	6.5	23	ns
$t_{d(off)}$	Turn-Off Delay Time		-	21	52	ns
t_f	Turn-Off Fall Time		-	16	42	ns
Drain-Source Diode Characteristics						
I_S	Maximum Continuous Drain to Source Diode Forward Current		-	-	1.6	A
I_{SM}	Maximum Pulsed Drain to Source Diode Forward Current		-	-	3.2	A
V_{SD}	Drain to Source Diode Forward Voltage	V_{GS} = 0 V, I_{SD} = 1.6 A	-	-	1.2	V
t_{rr}	Reverse Recovery Time	V_{GS} = 0 V, I_{SD} = 1.6 A, dI_F/dt = 100 A/μs	-	209	-	ns
Q_{rr}	Reverse Recovery Charge		-	1.2	-	μC

Notes:

1. Repetitive rating: pulse width limited by maximum junction temperature.
2. I_{AS} = 0.32 A, R_G = 25 Ω, starting T_J = 25°C
3. I_{SD} ≤ 1.6 A, di/dt ≤ 200 A/μs, V_{DD} ≤ BV_{DSS}, starting T_J = 25°C
4. Essentially independent of operating temperature typical characteristic.

Typical Performance Characteristics

Figure 1. On-Region Characteristics

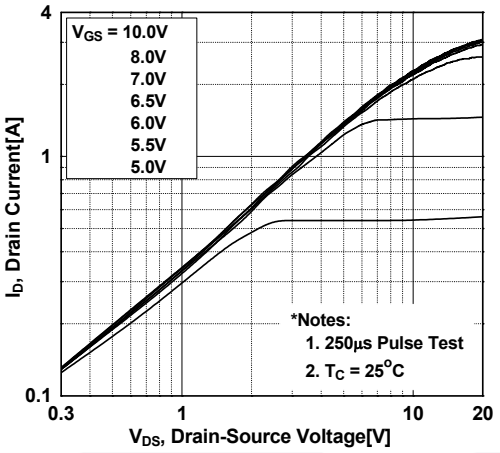

Figure 2. Transfer Characteristics

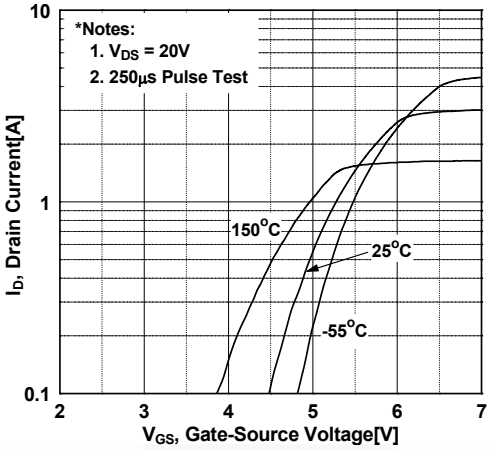

Figure 3. On-Resistance Variation vs. Drain Current and Gate Voltage

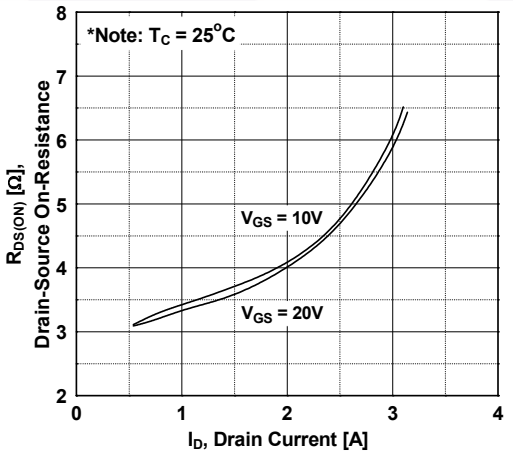

Figure 4. Body Diode Forward Voltage Variation vs. Source Current and Temperature

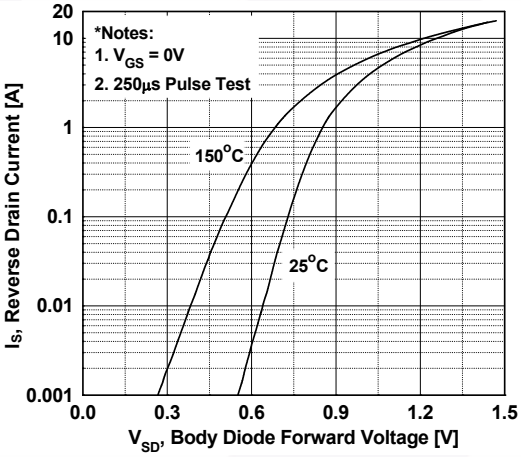

Figure 5. Capacitance Characteristics

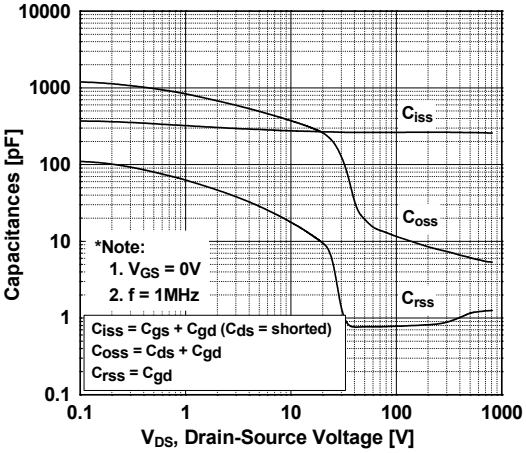

Figure 6. Gate Charge Characteristics

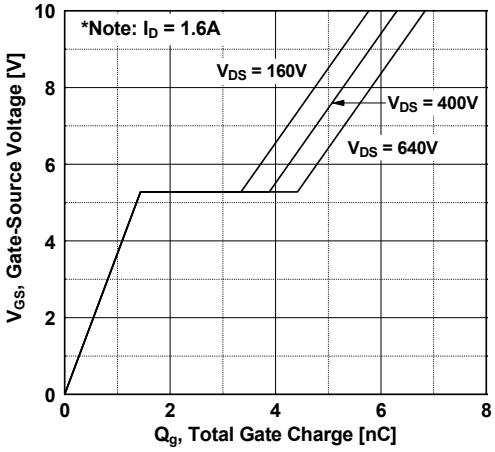

Typical Performance Characteristics (Continued)

Figure 7. Breakdown Voltage Variation vs. Temperature

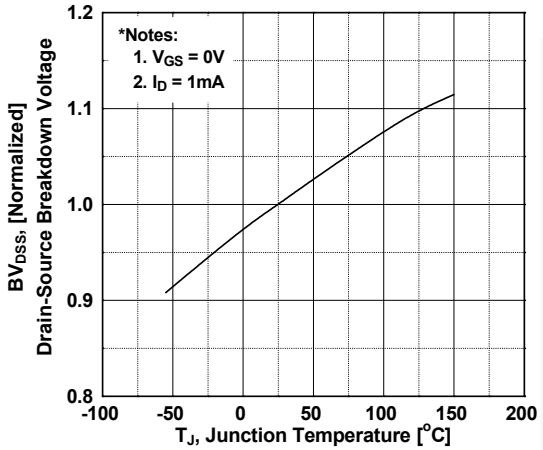

Figure 8. On-Resistance Variation vs. Temperature

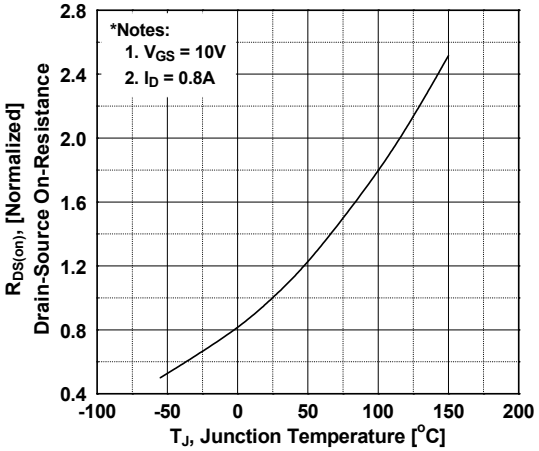

Figure 9. Maximum Safe Operating Area

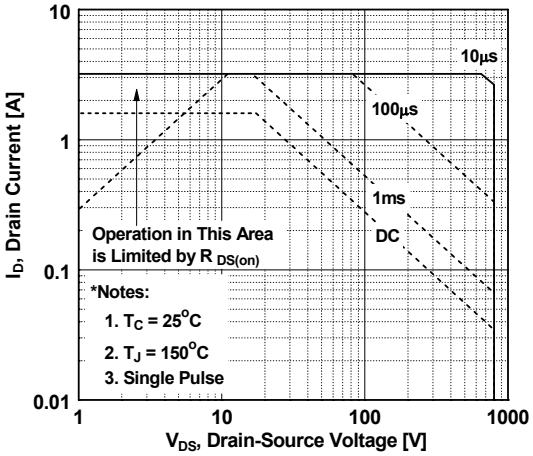

Figure 10. Maximum Drain Current vs. Case Temperature

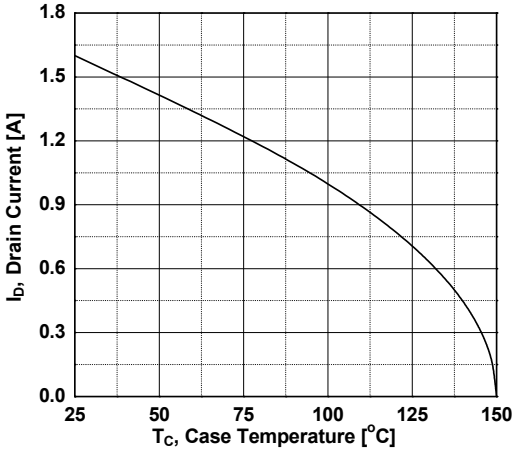

Figure 11. Eoss vs. Drain to Source Voltage

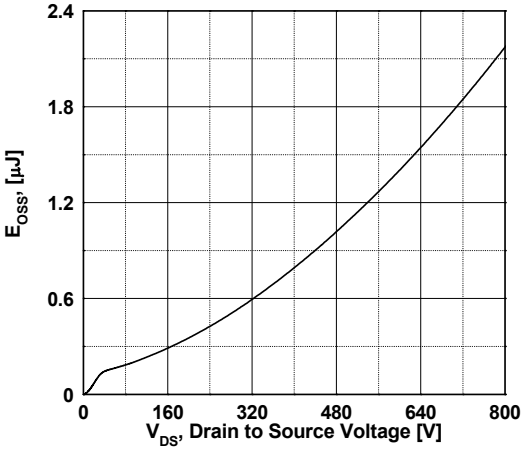

Typical Performance Characteristics (Continued)

Figure 12. Transient Thermal Response Curve

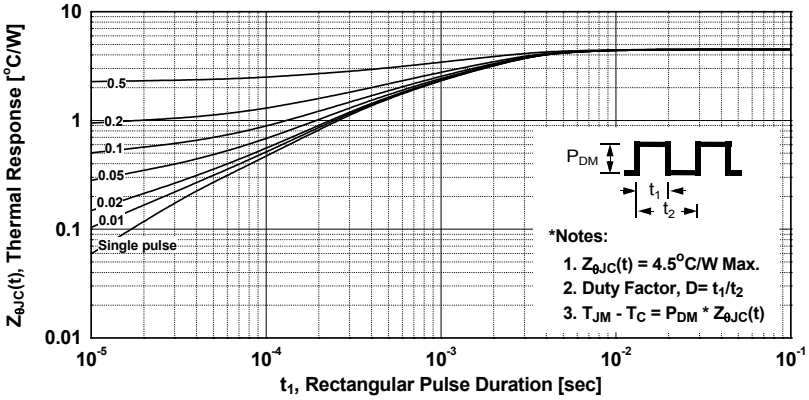

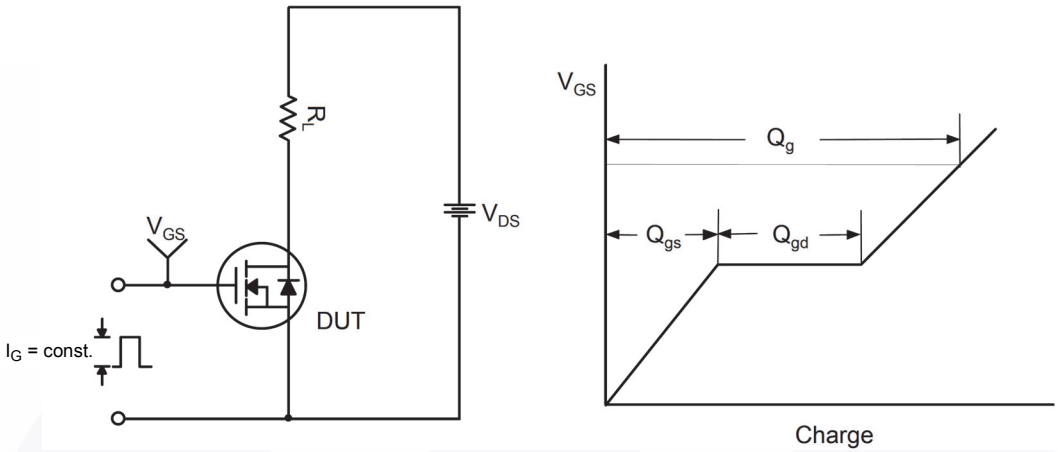

Figure 13. Gate Charge Test Circuit & Waveform

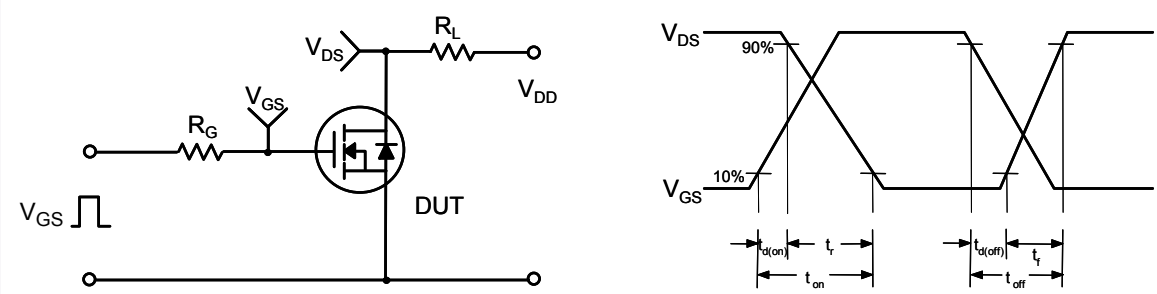

Figure 14. Resistive Switching Test Circuit & Waveforms

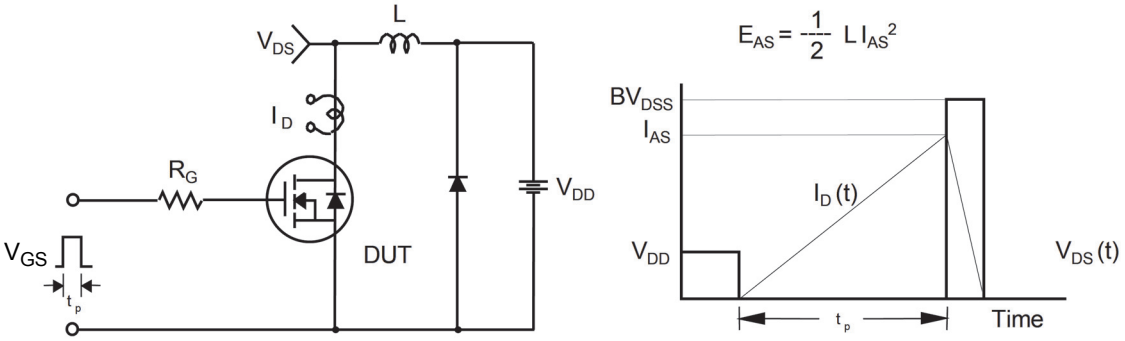

Figure 15. Unclamped Inductive Switching Test Circuit & Waveforms

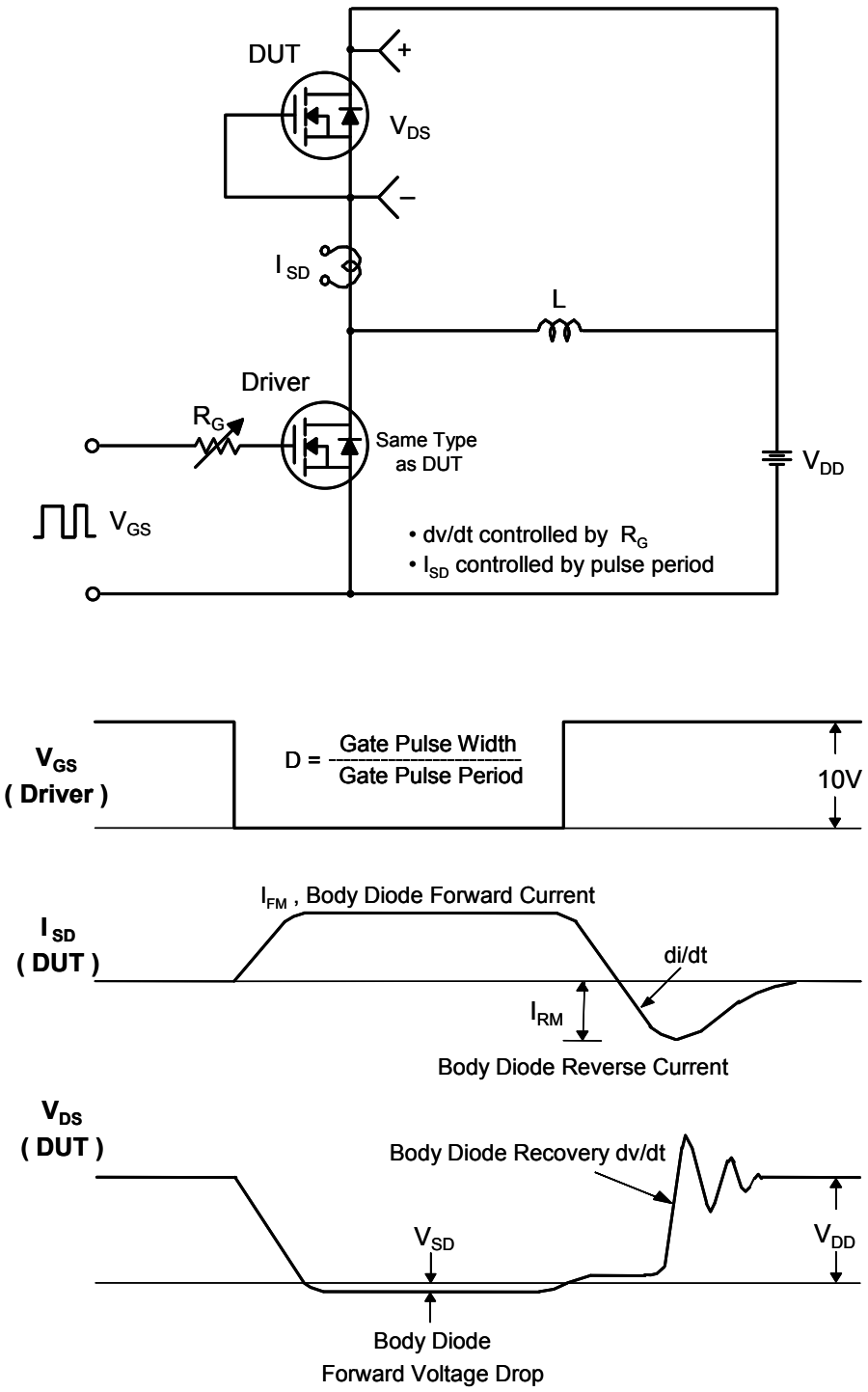

Figure 16. Peak Diode Recovery dv/dt Test Circuit & Waveforms

THIS DRAWING IS THE PROPERTY OF FAIRCHILD SEMICONDUCTOR CORPORATION. NO USE THEREOF SHALL BE MADE OTHER THAN AS A REFERENCE FOR PROPOSALS AS SUBMITTED TO FAIRCHILD SEMICONDUCTOR CORPORATION FOR JOBS TO BE EXECUTED IN CONFORMITY WITH SUCH PROPOSALS UNLESS THE CONSENT OF SAID FAIRCHILD SEMICONDUCTOR CORPORATION HAS PREVIOUSLY BEEN OBTAINED. NO PART OF THIS DRAWING SHALL BE COPIED OR DUPLICATED OR ITS CONTENTS DISCLOSED. THE INFORMATION CONTAINED ON THIS DRAWING IS CONFIDENTIAL AND PROPRIETARY.

REVISIONS

LTR	DESCRIPTION	E.C.N.	DATE	BY/APP'D
A	RELEASE TO DOCUMENT CONTROL	CB/031/01	16MAR2001	RM

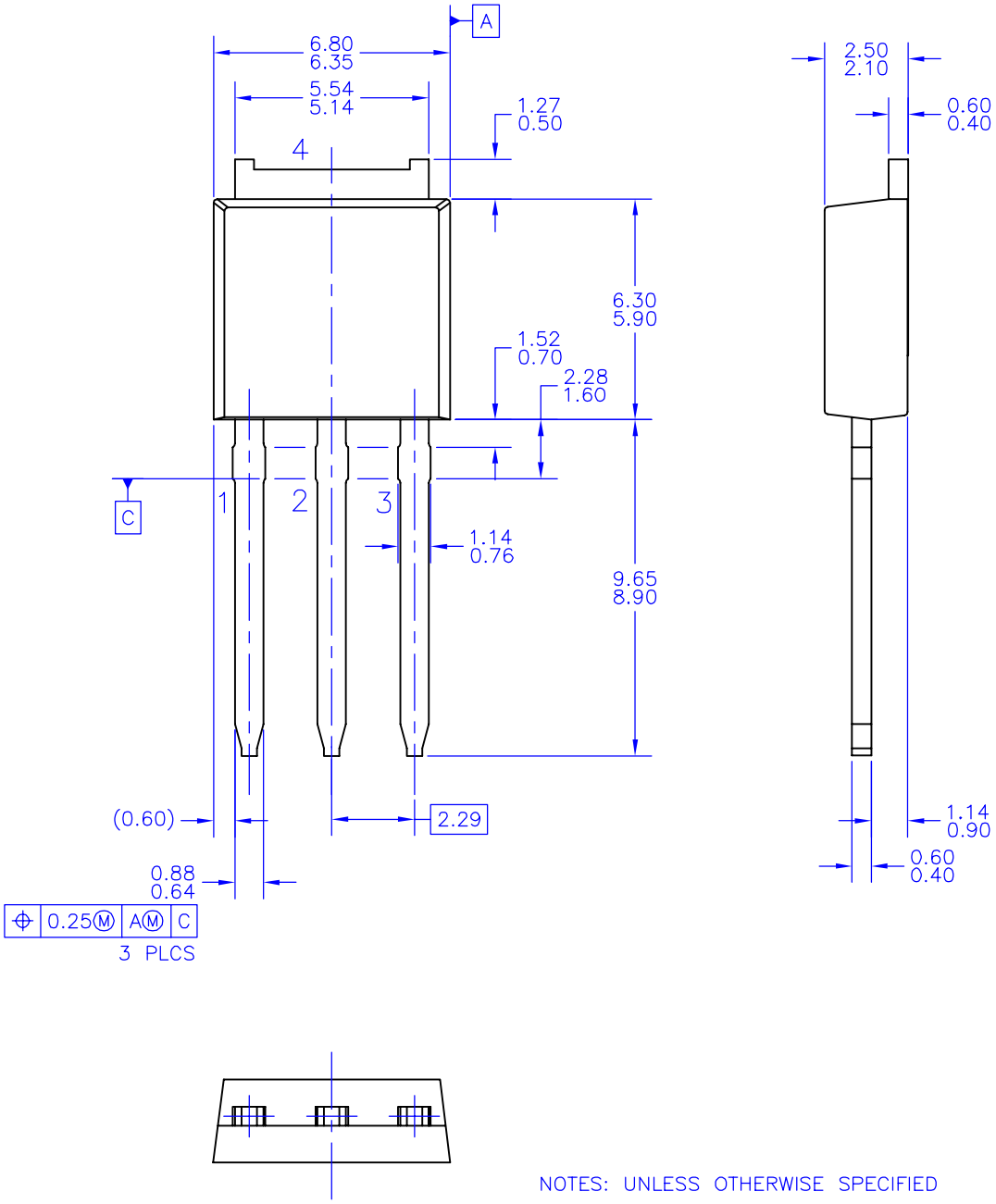

NOTES: UNLESS OTHERWISE SPECIFIED

A) ALL DIMENSIONS ARE IN MILLIMETERS.
B) THIS PACKAGE CONFORMS TO JEDEC, TO-251, ISSUE C, VARIATION AA, DATED SEP 1988.
C) DIMENSIONING AND TOLERANCING PER ASME Y14.5M-1994.

APPROVALS	DATE
DRAWN: J. GOMEZ	16MAR2001
CHECKED: R. MANABIT	
APPROVED: M. GESTOLE	
G.S. BAJE	

PROJECTION INCH [MM]

FAIRCHILD SEMICONDUCTOR™ CEBU PHILIPPINES

TO-251 (I-PAK) MOLDED, 3 LEAD, OPTION AA

SCALE	SIZE	DRAWING NUMBER	REV
8:1	A3	MKT-TO251A03	A

FORMERLY: N/A SHEET : 1 OF 1

TO251A03REVA

TRADEMARKS

The following includes registered and unregistered trademarks and service marks, owned by Fairchild Semiconductor and/or its global subsidiaries, and is not intended to be an exhaustive list of all such trademarks.

AccuPower™
AttitudeEngine™
Awinda®
AX-CAP®*
BitSiC™
Build it Now™
CorePLUS™
CorePOWER™
CROSSVOLT™
CTL™
Current Transfer Logic™
DEUXPEED®
Dual Cool™
EcoSPARK®
EfficientMax™
ESBC™
®
Fairchild®
Fairchild Semiconductor®
FACT Quiet Series™
FACT®
FAST®
FastvCore™
FETBench™
FPS™
F-PFS™
FRFET®
Global Power Resource℠
GreenBridge™
Green FPS™
Green FPS™ e-Series™
G*max*™
GTO™
IntelliMAX™
ISOPLANAR™
Making Small Speakers Sound Louder and Better™
MegaBuck™
MICROCOUPLER™
MicroFET™
MicroPak™
MicroPak2™
MillerDrive™
MotionMax™
MotionGrid®
MTi®
MTx®
MVN®
mWSaver®
OptoHiT™
OPTOLOGIC®
OPTOPLANAR®
®
Power Supply WebDesigner™
PowerTrench®
PowerXS™
Programmable Active Droop™
QFET®
QS™
Quiet Series™
RapidConfigure™
™
Saving our world, 1mW/W/kW at a time™
SignalWise™
SmartMax™
SMART START™
Solutions for Your Success™
SPM®
STEALTH™
SuperFET®
SuperSOT™-3
SuperSOT™-6
SuperSOT™-8
SupreMOS®
SyncFET™
Sync-Lock™
SYSTEM GENERAL®*
TinyBoost®
TinyBuck®
TinyCalc™
TinyLogic®
TINYOPTO™
TinyPower™
TinyPWM™
TinyWire™
TranSiC™
TriFault Detect™
TRUECURRENT®*
µSerDes™
µSerDes™
UHC®
Ultra FRFET™
UniFET™
VCX™
VisualMax™
VoltagePlus™
XS™
Xsens™
仙童™

* Trademarks of System General Corporation, used under license by Fairchild Semiconductor.

DISCLAIMER

FAIRCHILD SEMICONDUCTOR RESERVES THE RIGHT TO MAKE CHANGES WITHOUT FURTHER NOTICE TO ANY PRODUCTS HEREIN TO IMPROVE RELIABILITY, FUNCTION, OR DESIGN. TO OBTAIN THE LATEST, MOST UP-TO-DATE DATASHEET AND PRODUCT INFORMATION, VISIT OUR WEBSITE AT HTTP://WWW.FAIRCHILDSEMI.COM. FAIRCHILD DOES NOT ASSUME ANY LIABILITY ARISING OUT OF THE APPLICATION OR USE OF ANY PRODUCT OR CIRCUIT DESCRIBED HEREIN; NEITHER DOES IT CONVEY ANY LICENSE UNDER ITS PATENT RIGHTS, NOR THE RIGHTS OF OTHERS. THESE SPECIFICATIONS DO NOT EXPAND THE TERMS OF FAIRCHILD'S WORLDWIDE TERMS AND CONDITIONS, SPECIFICALLY THE WARRANTY THEREIN, WHICH COVERS THESE PRODUCTS.

AUTHORIZED USE

Unless otherwise specified in this data sheet, this product is a standard commercial product and is not intended for use in applications that require extraordinary levels of quality and reliability. This product may not be used in the following applications, unless specifically approved in writing by a Fairchild officer: (1) automotive or other transportation, (2) military/aerospace, (3) any safety critical application – including life critical medical equipment – where the failure of the Fairchild product reasonably would be expected to result in personal injury, death or property damage. Customer's use of this product is subject to agreement of this Authorized Use policy. In the event of an unauthorized use of Fairchild's product, Fairchild accepts no liability in the event of product failure. In other respects, this product shall be subject to Fairchild's Worldwide Terms and Conditions of Sale, unless a separate agreement has been signed by both Parties.

ANTI-COUNTERFEITING POLICY

Fairchild Semiconductor Corporation's Anti-Counterfeiting Policy. Fairchild's Anti-Counterfeiting Policy is also stated on our external website, www.fairchildsemi.com, under Terms of Use

Counterfeiting of semiconductor parts is a growing problem in the industry. All manufacturers of semiconductor products are experiencing counterfeiting of their parts. Customers who inadvertently purchase counterfeit parts experience many problems such as loss of brand reputation, substandard performance, failed applications, and increased cost of production and manufacturing delays. Fairchild is taking strong measures to protect ourselves and our customers from the proliferation of counterfeit parts. Fairchild strongly encourages customers to purchase Fairchild parts either directly from Fairchild or from Authorized Fairchild Distributors who are listed by country on our web page cited above. Products customers buy either from Fairchild directly or from Authorized Fairchild Distributors are genuine parts, have full traceability, meet Fairchild's quality standards for handling and storage and provide access to Fairchild's full range of up-to-date technical and product information. Fairchild and our Authorized Distributors will stand behind all warranties and will appropriately address any warranty issues that may arise. Fairchild will not provide any warranty coverage or other assistance for parts bought from Unauthorized Sources. Fairchild is committed to combat this global problem and encourage our customers to do their part in stopping this practice by buying direct or from authorized distributors.

PRODUCT STATUS DEFINITIONS

Definition of Terms

Datasheet Identification	Product Status	Definition
Advance Information	Formative / In Design	Datasheet contains the design specifications for product development. Specifications may change in any manner without notice.
Preliminary	First Production	Datasheet contains preliminary data; supplementary data will be published at a later date. Fairchild Semiconductor reserves the right to make changes at any time without notice to improve design.
No Identification Needed	Full Production	Datasheet contains final specifications. Fairchild Semiconductor reserves the right to make changes at any time without notice to improve the design.
Obsolete	Not In Production	Datasheet contains specifications on a product that is discontinued by Fairchild Semiconductor. The datasheet is for reference information only.

Rev. I75