RAK411 SPI WIFI Module
EVB User Guide V1.1

RAK WIFI

Shenzhen Rakwireless Technology Co.,Ltd www.rakwireless.com

Mail：info@rakwireless.com

1 Development Board Introduction

RAK411 Series development board is used to evaluate the SPI function. SPI supports four-wire mode, and optional interrupt INT pin. The peripheral circuit of RAK411 is quite simple, requiringfew devices. Development board also supports an interface for testing module power consumption.

The hardware resources needed for Development board are shown as Figure 1-1:

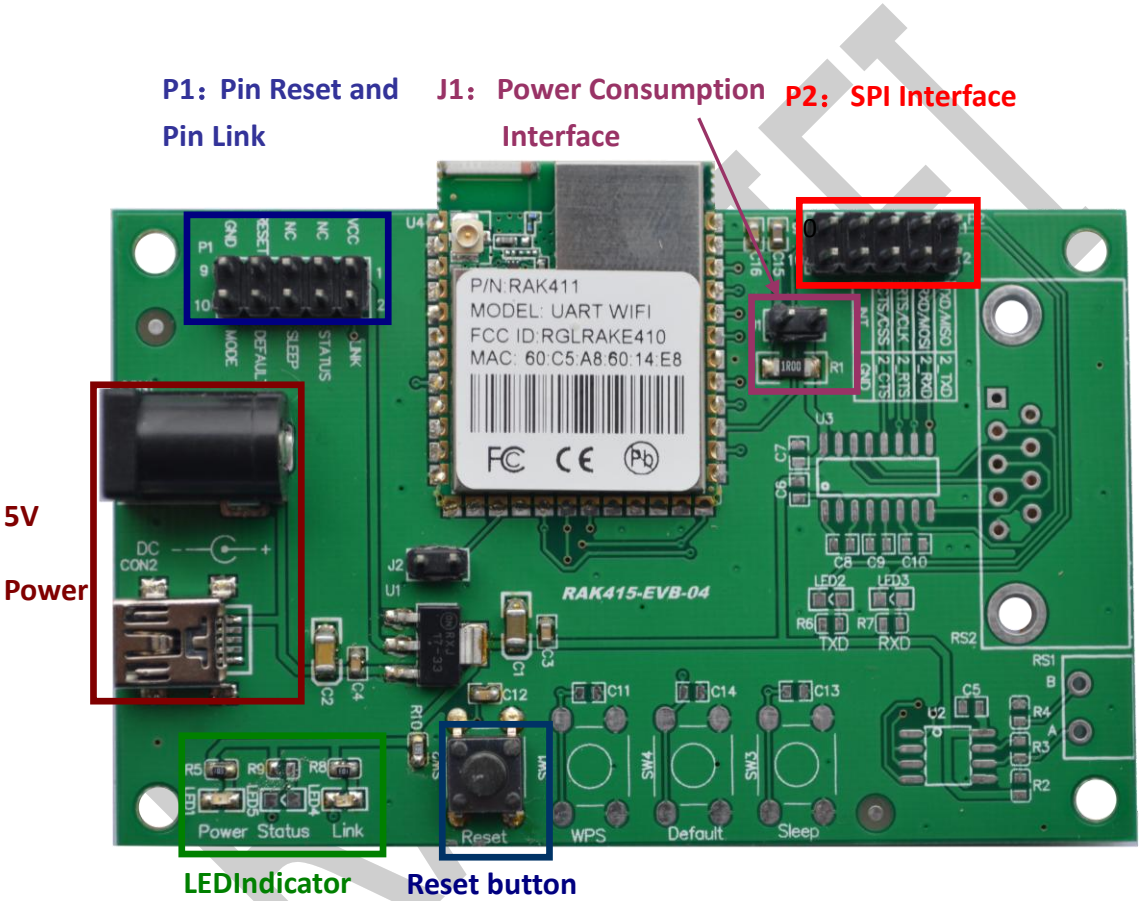

Figure 1-1: Development View

Table 1-2 Major peripheral hardware connection Diagram

Function	Name	Description
External Interface	Mini USB / DC5V	Power Supply, 5V DC input
Button	Reset	Module reset button
Pin out	P1	Pin Reset and Pin Link
	P2	SPI Interface, refer to print detail for interface order
Power consumption Pin	J1	Power Consumption Interface
LED Indicator	LED1	Power Indicator
	LED4	Link Indicator

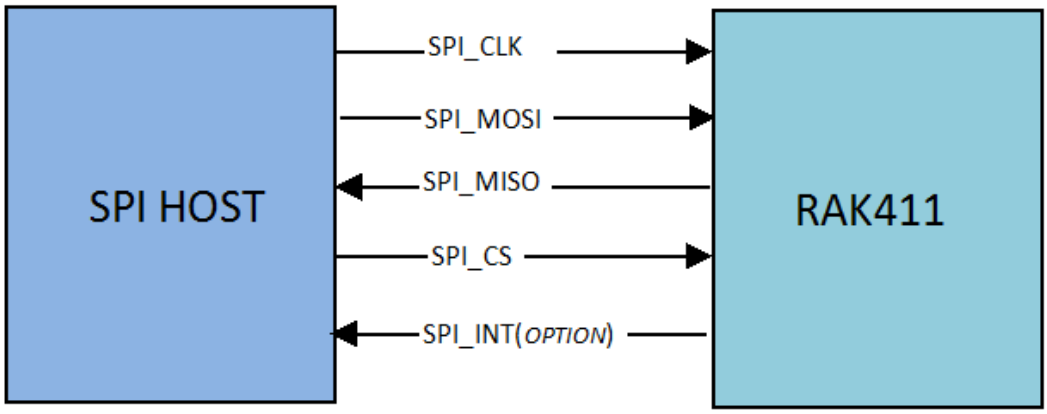

Figure 1-2: SPI Connection Diagram

2 Sales and Service

Beijing

FAE mailbox: allan.jin@rakwireless.com

Tel : 010-62716015

Fax: 010-62716015

Address: Room 1108, Jin Yanlong Building, Xisanqi Desheng Gate, Haidian District, Beijing

Shanghai

FAE mailbox: steven.tang@rakwireless.com

Tel : 021-54721182

Fax: 021-54721038

Address: Room 306, Ran East Business Center 1 Building, No.150, 2161 Lane, Wanyuan road, Minhang District, Shanghai

Shenzhen

FAE mailbox: vincent.wu@rakwireless.com

Tel : 0755-26506594

Fax : 0755-86152201

Address: Room 406, Tsinghua information comprehensive building, Nanshan Science Park North District , Shengzhen

3 Revision History

Version	Modification	Data
V1.0	Initial Draft	2014-03-28
V1.1	Update the contact way,Update the document format	2014-08-22

RAK WIFI