200W Single Output Switching Power Supply

NEL-200 series

■ Features :

- AC input 180~264VAC
- Protections: Short circuit / Overload / Over voltage/ Over temperature
- Leakage current<1mA
- Cooling by free air convection
- Low profile:30mm
- Withstand 300vac surge input for 5 second
- LED indicator for power on
- Conformal coating
- Low cost,high reliability
- 100% full load burn-in test
- 2 years warranty

SPECIFICATION

MODEL		NEL-200-2.8	NEL-200-4.2	NEL-200-5
OUTPUT	DC VOLTAGE	2.8V	4.2V	5V
	RATED CURRENT	40A	40A	40A
	CURRENT RANGE	0 ~ 40A	0 ~ 40A	0 ~ 40A
	RATED POWER	112W	168W	200W
	RIPPLE & NOISE (max.) Note.2	150mVp-p	150mVp-p	150mVp-p
	VOLTAGE ADJ. RANGE	2.5 ~ 3V	3.6 ~ 4.4V	4.5 ~ 5.5V
	VOLTAGE TOLERANCE Note.3	+3%,-4.5%	+3%,-4.5%	±3.0%
	LINE REGULATION	±0.5%	±0.5%	±0.5%
	LOAD REGULATION	±2.5%	±2.5%	±2.0%
	SETUP, RISE TIME	2500ms, 50ms/230VAC		
	HOLD UP TIME (Typ.)	20ms/230VAC		
INPUT	VOLTAGE RANGE	180 ~ 264VAC 254 ~ 370VDC		
	FREQUENCY RANGE	47 ~ 63Hz		
	EFFICIENCY (Typ.)	85%	87%	87%
	AC CURRENT (Typ.)	1.5A/230VAC	2A/230VAC	2.5A/230VAC
	INRUSH CURRENT (Typ.)	70A/230VAC		
	LEAKAGE CURRENT	<1mA / 240VAC		
PROTECTION	OVER LOAD	105 ~ 140% rated output power		
		Protection type : Hiccup mode, recovers automatically after fault condition is removed		
	OVER VOLTAGE	3.22 ~ 3.78V	4.6 ~ 5.4V	5.6 ~ 7V
		Protection type :Hiccup mode, recovers automatically after fault condition is removed		
	OVER TEMPERATURE	Shut down O/P voltage, recovers automatically after temperature goes down		
ENVIRONMENT	WORKING TEMP.	-20 ~ +60℃ (Refer to output load derating curve)		
	WORKING HUMIDITY	20 ~ 90% RH non-condensing		
	STORAGE TEMP., HUMIDITY	-20 ~ +85℃, 10 ~ 95% RH		
	TEMP. COEFFICIENT	±0.03%/℃ (0 ~ 50℃)		
	VIBRATION	10 ~ 500Hz, 3G 10min./1cycle, 60min. each along X, Y, Z axes		
SAFETY	SAFETY STANDARDS	UL60950-1 approved		
	WITHSTAND VOLTAGE	I/P-O/P:3KVAC I/P-FG:2KVAC O/P-FG:0.5KVAC		
	ISOLATION RESISTANCE	I/P-O/P, I/P-FG, O/P-FG:100M Ohms/500VDC / 25℃/ 70% RH		
OTHERS	MTBF	235K hrs min. MIL-HDBK-217F (25℃)		
	DIMENSION	215*115*30mm (L*W*H)		
	PACKING	0.75Kg;15pcs/12.3Kg/0.78CUFT		
NOTE	1. All parameters NOT specially mentioned are measured at 230VAC input, rated load and 25℃ of ambient temperature. 2. Ripple & noise are measured at 20MHz of bandwidth by using a 12" twisted pair-wire terminated with a 0.1uf & 47uf parallel capacitor. 3. Tolerance : includes set up tolerance, line regulation and load regulation.			

■ Mechanical Specification

Case No. 231A Unit:mm

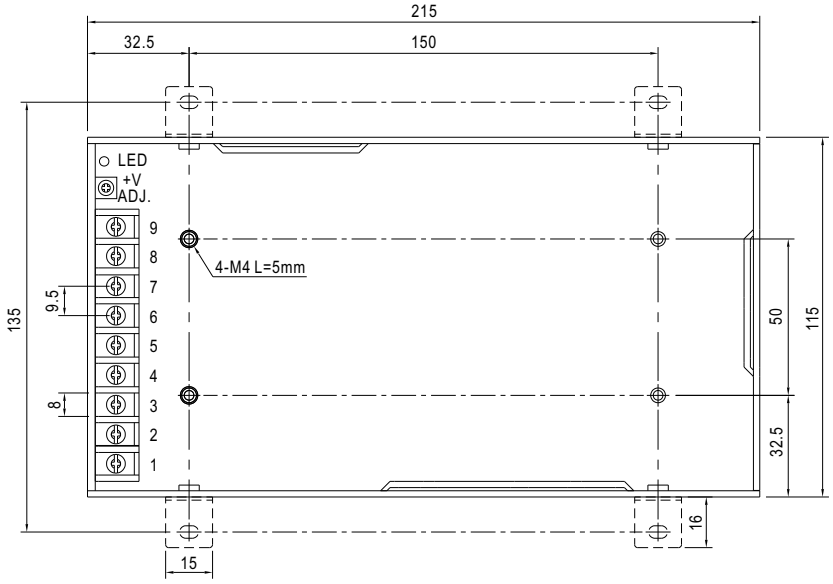

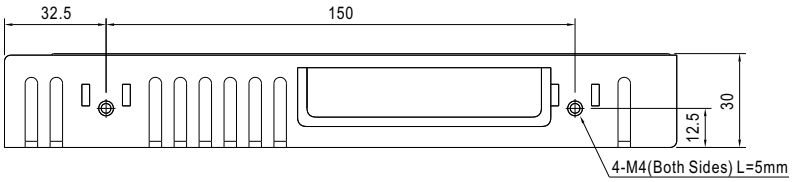

Terminal Pin No. Assignment :

Pin No.	Assignment	Pin No.	Assignment
1	AC/L	4~6	DC OUTPUT -V
2	AC/N	7~9	DC OUTPUT +V
3	FG ⏚		

■ Block Diagram

fosc : 80KHz

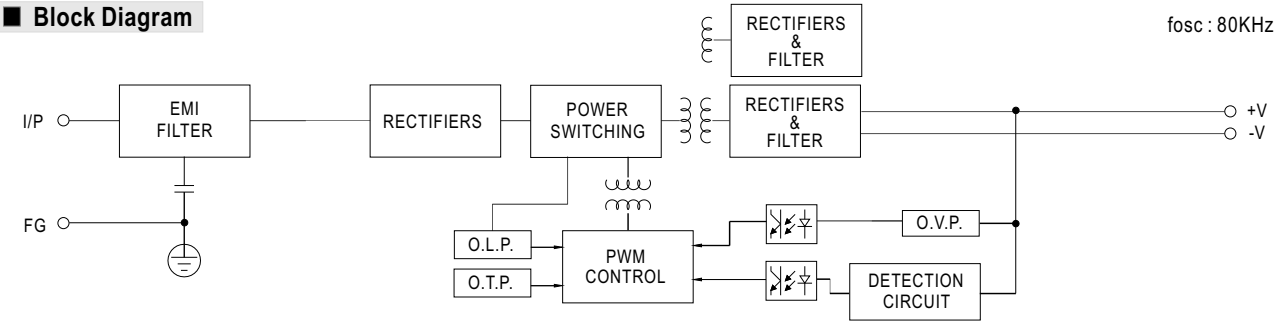

■ Derating Curve

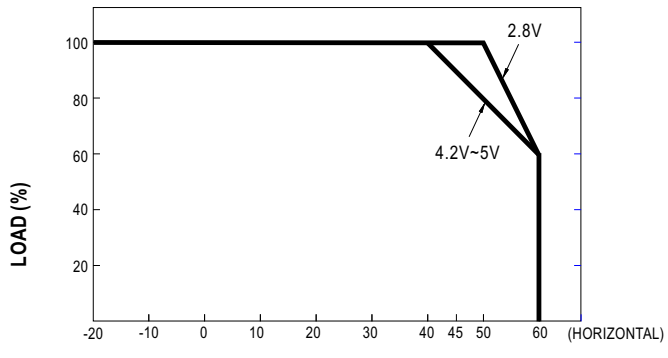

AMBIENT TEMPERATURE (℃)

■ Static Characteristics

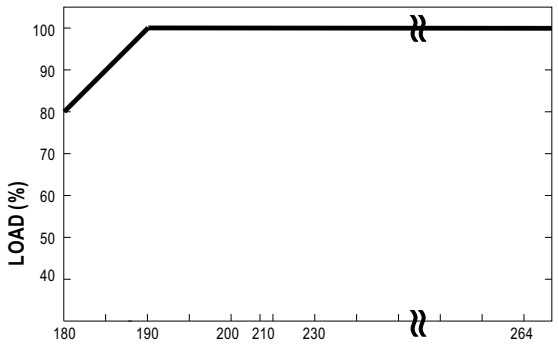

INPUT VOLTAGE (VAC) 60Hz