Phase-leg Rectifier Diode

V_{RRM} = 1600 V
$I_{F(RMS)}$ = 2x70 A
$I_{F(AV)M}$ = 2x45 A

V_{RSM} V	V_{RRM} V	Type
1700	1600	DSP 45-16AR

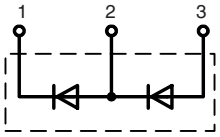

ISOPLUS247™

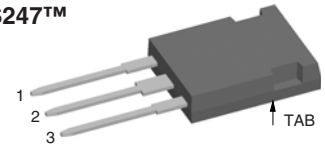

1 = Cathode, 2 = Anode/Cathode, 3 = Anode

Symbol	Conditions	Maximum Ratings	
$I_{F(RMS)}$	$T_{VJ} = T_{VJM}$	70	A
$I_{F(AV)M}$	T_C = 100°C; 180° sine	43	A
I_{FSM}	T_{VJ} = 45°C; t = 10 ms (50 Hz), sine	480	A
	t = 8.3 ms (60 Hz), sine	510	A
	T_{VJ} = 150°C; t = 10 ms (50 Hz), sine	420	A
	t = 8.3 ms (60 Hz), sine	450	A
I^2t	T_{VJ} = 45°C t = 10 ms (50 Hz), sine	1150	A^2s
	t = 8.3 ms (60 Hz), sine	1090	A^2s
	T_{VJ} = 150°C; t = 10 ms (50 Hz), sine	880	A^2s
	t = 8.3 ms (60 Hz), sine	855	A^2s
T_{VJ}		-40...+150	°C
T_{VJM}		+150	°C
T_{stg}		-40...+150	°C
F_C	Clip mounting force	20...120	N
V_{ISOL}	50/60 Hz, RMS, t = 1 minute, leads-to-tab	3000	V~
Weight		6	g

Symbol	Conditions	Characteristic Values	
I_R	T_{VJ} = 150°C $V_R = V_{RRM}$	≤ 3	mA
V_F	I_F = 40 A; T_{VJ} = 25°C	≤ 1.23	V
V_{T0}	For power-loss calculations only	0.8	V
r_T	$T_{VJ} = T_{VJM}$	11	mΩ
R_{thJC}	DC current	0.7	K/W
R_{thCH}	DC current (with heatsink compound)	0.2	K/W
a	Maximum allowable acceleration	50	m/s^2

Data according to IEC 60747 and refer to a single diode

Features / Advantages

- Planar passivated chips
- Very low leakage current
- Very low forward voltage drop
- Improved thermal behaviour

Applications

- Diode for main rectification
- For single and three phase bridge configuration

Package

- Industry standard outline
- DCB isolated backside
- Isolation voltage 3000 V
- Epoxy meets UL 94V-0
- UL registered E72873
- RoHS compliant

© 2009 IXYS All rights reserved

ISOPLUS247™

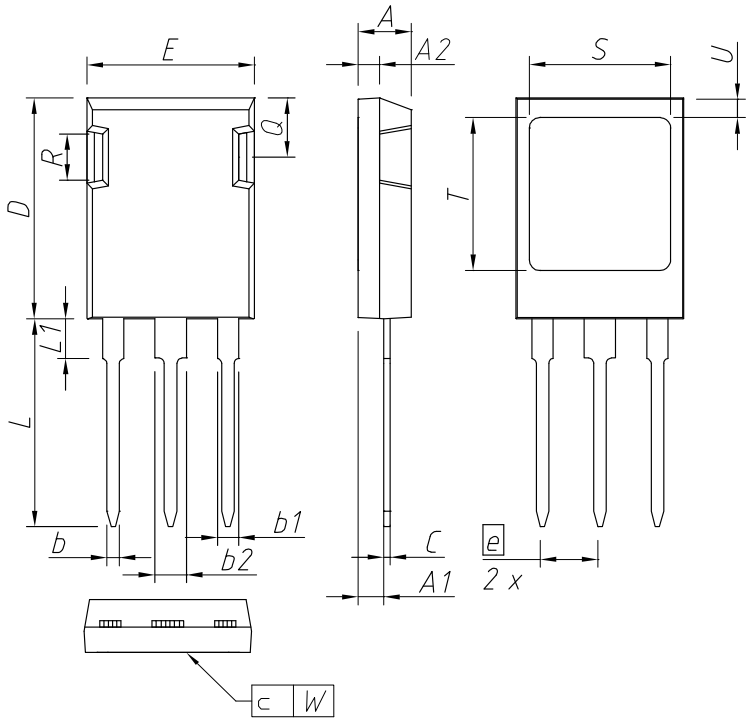

DIM.	MILLIMETER		INCHES	
	MIN	MAX	MIN	MAX
A	4,83	5,21	0,190	0,205
A1	2,29	2,54	0,090	0,100
A2	1,91	2,16	0,075	0,085
b	1,14	1,40	0,045	0,055
b1	1,91	2,15	0,075	0,085
b2	2,92	3,20	0,115	0,126
C	0,61	0,83	0,024	0,033
D	20,80	21,34	0,819	0,840
E	15,75	16,13	0,620	0,635
e	5,45 BSC		0,215 BSC	
L	19,81	20,60	0,780	0,811
L1	3,81	4,38	0,150	0,172
Q	5,59	6,20	0,220	0,244
R	4,32	4,85	0,170	0,191
S	13,21	13,72	0,520	0,540
T	15,75	16,26	0,620	0,640
U	1,65	2,03	0,065	0,080
W	-	0,10	-	0,004

The convex bow of substrate is typ. < 0.04 mm over plastic surface level of device bottom side
This drawing will meet all dimensions requirement of JEDEC outline TO-247 AD except screw hole and except Lmax.

© 2009 IXYS All rights reserved