19-4811; Rev 1; 4/10

EVALUATION KIT AVAILABLE

Compact, Low-Cost 1S/2S Fuel Gauges with Low-Battery Alert

MAX17043/MAX17044

General Description

The MAX17043/MAX17044 are ultra-compact, low-cost, host-side fuel-gauge systems for lithium-ion (Li+) batteries in handheld and portable equipment. The MAX17043 is configured to operate with a single lithium cell and the MAX17044 is configured for a dual-cell 2S pack.

The MAX17043/MAX17044 use a sophisticated Li+ battery-modeling scheme, called ModelGauge™ to track the battery's relative state-of-charge (SOC) continuously over a widely varying charge/discharge profile. Unlike traditional fuel gauges, the ModelGauge algorithm eliminates the need for battery relearn cycles and an external current-sense resistor. Temperature compensation is possible in the application with minimal interaction between a µC and the device.

A quick-start mode provides a good initial estimate of the battery's SOC. This feature allows the IC to be located on system side, reducing cost and supply chain constraints on the battery. Measurement and estimated capacity data sets are accessed through an I²C interface. The MAX17043/MAX17044 are available in a small, 2mm x 3mm, 8-pin TDFN lead-free package.

Applications

Smartphones	Portable DVD Players
MP3 Players	GPS Systems
Digital Still Cameras	Handheld and Portable Applications
Digital Video Cameras	

ModelGauge is a trademark of Maxim Integrated Products, Inc.

Features

- **Host-Side or Battery-Side Fuel Gauging**
  1 Cell (MAX17043)
  2 Cell (MAX17044)
- **Precision Voltage Measurement**
  ±12.5mV Accuracy to 5.00V (MAX17043)
  ±30mV Accuracy to 10.00V (MAX17044)
- **Accurate Relative Capacity (RSOC) Calculated from ModelGauge Algorithm**
- **No Offset Accumulation on Measurement**
- **No Full-to-Empty Battery Relearning Necessary**
- **No Sense Resistor Required**
- **External Alarm/Interrupt for Low-Battery Warning**
- **2-Wire Interface**
- **Low Power Consumption**
- **Tiny, Lead-Free, 8-Pin, 2mm x 3mm TDFN Package**

Ordering Information

PART	TEMP RANGE	PIN-PACKAGE
MAX17043G+U	-20°C to +70°C	8 TDFN-EP*
MAX17043G+T	-20°C to +70°C	8 TDFN-EP*
MAX17044G+U	-20°C to +70°C	8 TDFN-EP*
MAX17044G+T	-20°C to +70°C	8 TDFN-EP*

+Denotes a lead(Pb)-free/RoHS-compliant package.
T = Tape and reel.
**EP = Exposed pad.*

Simplified Operating Circuit

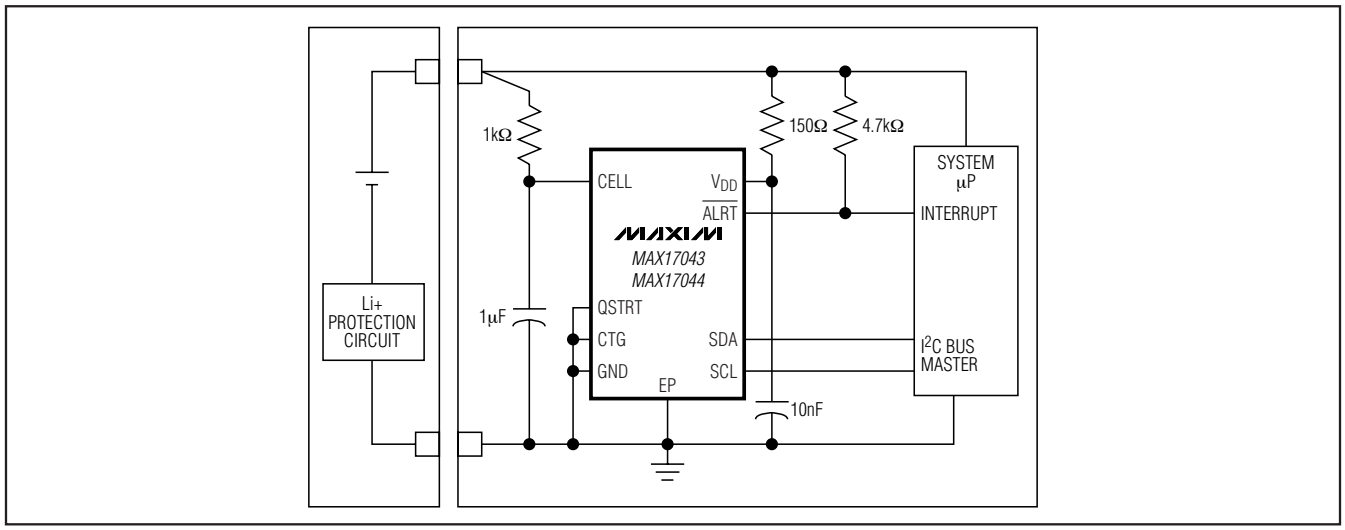

For pricing, delivery, and ordering information, please contact Maxim Direct at 1-888-629-4642, or visit Maxim's website at www.maxim-ic.com.

Compact, Low-Cost 1S/2S Fuel Gauges with Low-Battery Alert

ABSOLUTE MAXIMUM RATINGS

Voltage on CTG Pin Relative to V_{GND} .....-0.3V to +12V
Voltage on CELL Pin Relative to V_{GND}.....-0.3V to +12V
Voltage on All Other Pins Relative to V_{GND}.....-0.3V to +6V
Operating Temperature Range .....-40°C to +85°C
Storage Temperature Range .....-55°C to +125°C
Lead Temperature (soldering, 10s) .....+260°C
Soldering Temperature (reflow) .....+260°C

Stresses beyond those listed under "Absolute Maximum Ratings" may cause permanent damage to the device. These are stress ratings only, and functional operation of the device at these or any other conditions beyond those indicated in the operational sections of the specifications is not implied. Exposure to absolute maximum rating conditions for extended periods may affect device reliability.

ELECTRICAL CHARACTERISTICS RECOMMENDED DC OPERATING CONDITIONS

(2.5V ≤ V_{DD} ≤ 4.5V, T_A = -20°C to +70°C, unless otherwise noted.)

PARAMETER	SYMBOL	CONDITIONS	MIN	TYP	MAX	UNITS
Supply Voltage	V_{DD}	(Note 1)	+2.5		+4.5	V
Data I/O Pins	SCL, SDA, QSTRT, $\overline{ALRT}$	(Note 1)	-0.3		+5.5	V
MAX17043 CELL Pin	V_{CELL}	(Note 1)	-0.3		+5.0	V
MAX17044 CELL Pin	V_{CELL}	(Note 1)	-0.3		+10.0	V

DC ELECTRICAL CHARACTERISTICS

(2.5V ≤ V_{DD} ≤ 4.5V, T_A = -20°C to +70°C, unless otherwise noted. Contact Maxim for V_{DD} greater than 4.5V.)

PARAMETER	SYMBOL	CONDITIONS	MIN	TYP	MAX	UNITS
Active Current	I_{ACTIVE}			50	75	µA
Sleep-Mode Current (Note 2)	I_{SLEEP}	V_{DD} = 2.0V		0.5	1.0	µA
				1	3	
Time-Base Accuracy	t_{ERR}	V_{DD} = 3.6V at +25°C	-1		+1	%
		T_A = 0°C to +70°C	-2		+2	
		T_A = -20°C to +70°C	-3		+3	
MAX17043 Voltage-Measurement Error	V_{GERR}	T_A = +25°C, V_{IN} = V_{DD}	-12.5		+12.5	mV
			-30		+30	
MAX17044 Voltage-Measurement Error		T_A = +25°C, 5.0V < V_{IN} < 9.0V	-30		+30	mV
		5.0 < V_{IN} < 9.0	-60		+60	
CELL Pin Input Impedance	R_{CELL}		15			MΩ
Input Logic-High: SCL, SDA, QSTRT	V_{IH}	(Note 1)	1.4			V
Input Logic-Low: SCL, SDA, QSTRT	V_{IL}	(Note 1)			0.5	V
Output Logic-Low: SDA	V_{OL}	I_{OL} = 4mA (Note 1)			0.4	V
Output Logic-Low: $\overline{ALRT}$	$V_{OL-ALRT}$	$I_{OL-ALRT}$ = 2mA (Note 1)			0.4	V
Pulldown Current: SCL, SDA	I_{PD}	V_{DD} = 4.5V, V_{PIN} = 0.4V		0.2		µA
Input Capacitance: SCL, SDA	C_{BUS}				50	pF
Bus Low Timeout	t_{SLEEP}	(Note 3)	1.75		2.5	s
Mode Transition	t_{TRAN}	(Note 4)			1	ms

ELECTRICAL CHARACTERISTICS: 2-WIRE INTERFACE

($2.5V \le V_{DD} \le 4.5V$, T_A = -20°C to +70°C.)

PARAMETER	SYMBOL	CONDITIONS	MIN	TYP	MAX	UNITS
SCL Clock Frequency	f_{SCL}	(Note 5)	0		400	kHz
Bus Free Time Between a STOP and START Condition	t_{BUF}		1.3			µs
Hold Time (Repeated) START Condition	$t_{HD:STA}$	(Note 5)	0.6			µs
Low Period of SCL Clock	t_{LOW}		1.3			µs
High Period of SCL Clock	t_{HIGH}		0.6			µs
Setup Time for a Repeated START Condition	$t_{SU:STA}$		0.6			µs
Data Hold Time	$t_{HD:DAT}$	(Notes 6, 7)	0		0.9	µs
Data Setup Time	$t_{SU:DAT}$	(Note 6)	100			ns
Rise Time of Both SDA and SCL Signals	t_R		$20 + 0.1C_B$		300	ns
Fall Time of Both SDA and SCL Signals	t_F		$20 + 0.1C_B$		300	ns
Setup Time for STOP Condition	$t_{SU:STO}$		0.6			µs
Spike Pulse Widths Suppressed by Input Filter	t_{SP}	(Note 8)	0		50	ns
Capacitive Load for Each Bus Line	C_B	(Note 9)			400	pF
SCL, SDA Input Capacitance	C_{BIN}				60	pF

Note 1: All voltages are referenced to V_{SS}.
Note 2: SDA, SCL = V_{SS}; QSTRT, $\overline{ALRT}$ idle.
Note 3: The MAX17043/MAX17044 enter Sleep mode 1.75s to 2.5s after (SCL < V_{IL}) AND (SDA < V_{IL}).
Note 4: Time to enter sleep after Sleep command is sent. Time to exit sleep on rising edge of SCL or SDA.
Note 5: f_{SCL} must meet the minimum clock low time plus the rise/fall times.
Note 6: The maximum $t_{HD:DAT}$ has only to be met if the device does not stretch the low period (t_{LOW}) of the SCL signal.
Note 7: This device internally provides a hold time of at least 75ns for the SDA signal (referred to the V_{IHMIN} of the SCL signal) to bridge the undefined region of the falling edge of SCL.
Note 8: Filters on SDA and SCL suppress noise spikes at the input buffers and delay the sampling instant.
Note 9: C_B—total capacitance of one bus line in pF.

Compact, Low-Cost 1S/2S Fuel Gauges with Low-Battery Alert

Typical Operating Characteristics

(T_A = +25°C, unless otherwise noted.)

QUIESCENT CURRENT vs. SUPPLY VOLTAGE

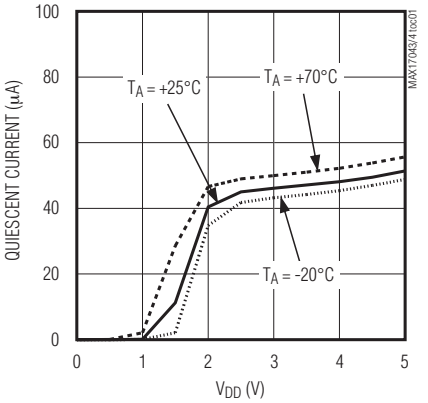

SIMPLE C/2 RATE CYCLES SOC ACCURACY

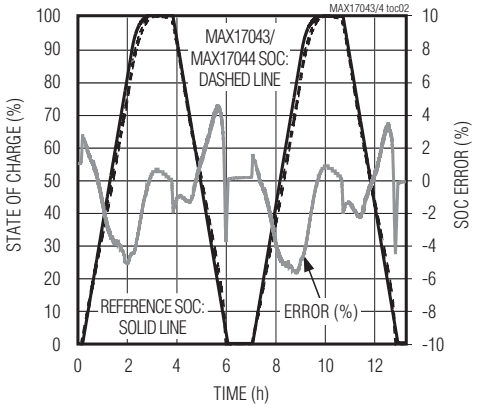

SIMPLE C/4 RATE CYCLES SOC ACCURACY

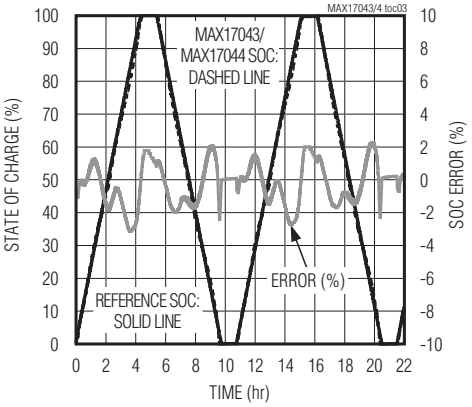

MAX17043 VOLTAGE ADC ERROR vs. TEMPERATURE

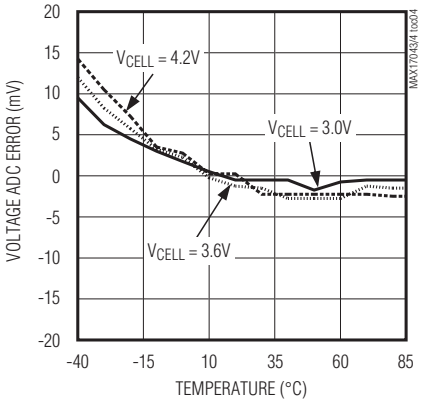

C/2 RATE ZIGZAG PATTERN SOC ACCURACY

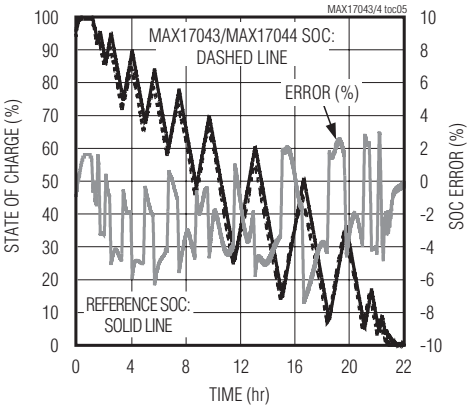

Pin Configuration

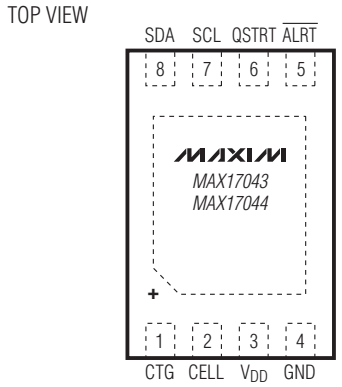

TDFN
(2mm × 3mm)

Pin Description

PIN	NAME	FUNCTION
1	CTG	Connect to Ground. Connect to V_{SS} during normal operation.
2	CELL	Battery Voltage Input. The voltage of the cell pack is measured through this pin.
3	V_{DD}	Power-Supply Input. 2.5V to 4.5V input range. Connect to system power through a decoupling network. Connect a 10nF typical decoupling capacitor close to pin.
4	GND	Ground. Connect to the negative power rail of the system.
5	$\overline{ALRT}$	Alert Output. Active-low interrupt signaling low state of charge. Connect to interrupt input of the system microprocessor.
6	QSTRT	Quick-Start Input. Allows reset of the device through hardware. Connect to GND if not used.
7	SCL	Serial-Clock Input. Input only 2-wire clock line. Connect this pin to the CLOCK signal of the 2-wire interface. This pin has a 0.2µA typical pulldown to sense disconnection.
8	SDA	Serial-Data Input/Output. Open-drain 2-wire data line. Connect this pin to the DATA signal of the 2-wire interface. This pin has a 0.2µA typical pulldown to sense disconnection.
—	EP	Exposed Pad. Connect to GND.

Compact, Low-Cost 1S/2S Fuel Gauges with Low-Battery Alert

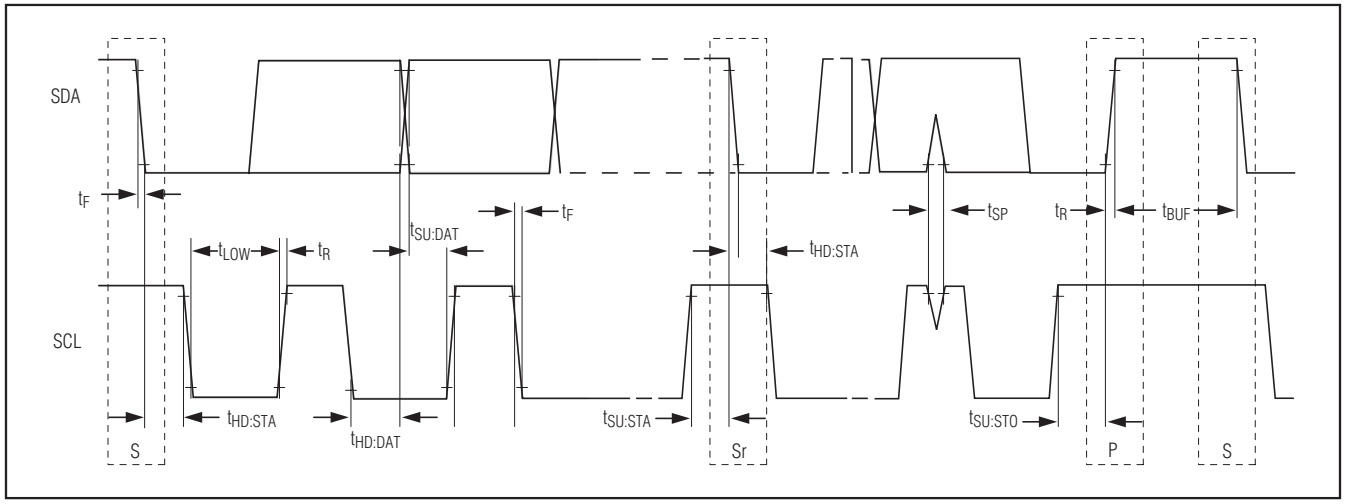

Figure 1. 2-Wire Bus Timing Diagram

Detailed Description

Figure 1 shows the 2-wire bus timing diagram, and Figure 2 is the MAX17043/MAX17044 block diagram.

ModelGauge Theory of Operation

The MAX17043/MAX17044 use a sophisticated battery model that determines the SOC of a nonlinear Li+ battery. The model effectively simulates the internal dynamics of a Li+ battery and determines the SOC. The model considers the time effects of a battery caused by the chemical reactions and impedance in the battery. The MAX17043/MAX17044 SOC calculation does not accumulate error with time. This is advantageous compared to traditional coulomb counters, which suffer from SOC drift caused by current-sense offset and cell self-discharge. This model provides good performance for many Li+ chemistry variants across temperature and age. The MAX17043/MAX17044 have a preloaded ROM table that provides very good performance for most chemistries.

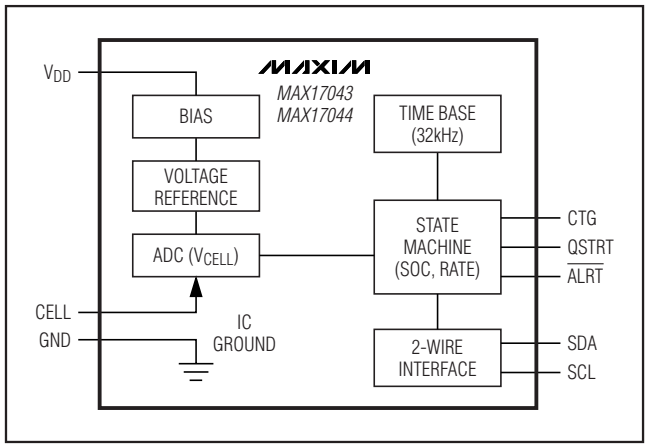

Figure 2. Block Diagram

Fuel-Gauge Performance

The classical coulomb-counter-based fuel gauges suffer from accuracy drift due to the accumulation of the offset error in the current-sense measurement. Although the error is often very small, the error increases over time in such systems, cannot be eliminated, and requires periodic corrections. The corrections are usually performed on a predefined SOC level near full or empty. Some other systems use the relaxed battery voltage to perform corrections. These systems determine the true SOC based on the battery voltage after a long time of no activity. Both have the same limitation: if the correction condition is not observed over time in the actual application, the error in the system is boundless. In some systems, a full-charge/discharge cycle is required to eliminate the drift error. To determine the true accuracy of a fuel gauge, as experienced by end users, the battery should be exercised in a dynamic manner. The end-user accuracy cannot be understood with only simple cycles. MAX17043/MAX17044 do not suffer from the drift problem since they do not rely on the current information.

IC Power-Up

When the battery is first inserted into the system, there is no previous knowledge about the battery's SOC. The IC assumes that the battery has been in a relaxed state for the previous 30min. The first A/D voltage measurement is translated into a best "first guess" for the SOC. Initial error caused by the battery not being in a relaxed state fades over time, regardless of cell loading following this initial conversion. Because the SOC determination is convergent rather than divergent (as in a coulomb counter), this initial error does not have a long-lasting impact.

Quick-Start

A quick-start allows the MAX17043/MAX17044 to restart fuel-gauge calculations in the same manner as initial power-up of the IC. For example, if an application's power-up sequence is exceedingly noisy such that excess error is introduced into the IC's "first guess" of SOC, the host can issue a quick-start to reduce the error. A quick-start is initiated by a rising edge on the QSTRT pin, or through software by writing 4000h to the MODE register.

ALERT Interrupt

The MAX17043/MAX17044 have an interrupt feature that alerts a host microprocessor whenever the cell's state of charge, as defined by the SOC register, falls below a predefined alert threshold set at address 0Dh of the CONFIG register.

When an alert is triggered, the IC drives the $\overline{\text{ALRT}}$ pin to logic-low and sets the ALRT bit in the CONFIG register to logic 1. The $\overline{\text{ALRT}}$ pin remains logic-low until the host software writes the ALRT bit to logic 0 to clear the interrupt. Clearing the ALRT bit while SOC is below the alert threshold does not generate another interrupt. The SOC register must first rise above and then fall below the alert threshold value before another interrupt is generated.

Note that the alert function is not disabled at IC power-up. If the first SOC calculation is below the threshold setting, an interrupt is generated. Entering Sleep mode does not clear the interrupt.

Sleep Mode

Holding both SDA and SCL logic-low forces the MAX17043/MAX17044 into Sleep mode. While in Sleep mode, all IC operations are halted and power drain of the IC is greatly reduced. After exiting Sleep mode, fuel-gauge operation continues from the point it was halted. SDA and SCL must be held low for at least 2.5s to guarantee transition into Sleep mode. Afterwards, a rising edge on either SDA or SCL immediately transitions the IC out of Sleep mode.

Alternatively, Sleep mode can be entered by setting the SLEEP bit in the CONFIG register to logic 1 through I^2C communication. If the SLEEP bit is set to logic 1, the only way to exit Sleep mode is to write SLEEP to logic 0 or power-on reset the IC.

Power-On Reset (POR)

Writing a value of 5400h to the COMMAND register causes the MAX17043/MAX17044 to completely reset as if power had been removed. The reset occurs when the last bit has been clocked in. The IC does not respond with an I^2C ACK after this command sequence.

Registers

All host interaction with the MAX17043/MAX17044 is handled by writing to and reading from register locations. The MAX17043/MAX17044 have six 16-bit registers: **SOC**, **VCELL**, **MODE**, **VERSION**, **CONFIG**, and **COMMAND**. Register reads and writes are only valid if all 16 bits are transferred. Any write command that is terminated early is ignored. The function of each register is described as follows. All remaining address locations not listed in Table 1 are reserved. Data read from reserved locations is undefined.

Table 1. Register Summary

ADDRESS (HEX)	REGISTER	DESCRIPTION	READ/ WRITE	DEFAULT (HEX)
02h–03h	VCELL	Reports 12-bit A/D measurement of battery voltage.	R	—
04h–05h	SOC	Reports 16-bit SOC result calculated by ModelGauge algorithm.	R	—
06h–07h	MODE	Sends special commands to the IC.	W	—
08h–09h	VERSION	Returns IC version.	R	—
0Ch–0Dh	CONFIG	Battery compensation. Adjusts IC performance based on application conditions.	R/W	971Ch
FEh–FFh	COMMAND	Sends special commands to the IC.	W	—

Compact, Low-Cost 1S/2S Fuel Gauges with Low-Battery Alert

VCELL Register

Battery voltage is measured at the CELL pin input with respect to GND over a 0 to 5.00V range for the MAX17043 and 0 to 10.00V for the MAX17044 with resolutions of 1.25mV and 2.50mV, respectively. The A/D calculates the average cell voltage for a period of 125ms after IC POR and then for a period of 500ms for every cycle afterwards. The VCELL register requires 500ms to update after exiting Sleep mode. The result is placed in the VCELL register at the end of each conversion period. Figure 3 shows the VCELL register format.

SOC Register

The SOC register is a read-only register that displays the state of charge of the cell as calculated by the ModelGauge algorithm. The result is displayed as a percentage of the cell's full capacity. This register automatically adapts to variation in battery size since the MAX17043/MAX17044 naturally recognize relative SOC. Units of % can be directly determined by observing only the high byte of the SOC register. The low byte provides additional resolution in units 1/256%. The reported SOC also includes residual capacity, which might not be available to the actual application because of early termination voltage requirements. When SOC() = 0, typical applications have no remaining capacity.

The first update occurs 125ms after POR of the IC. Subsequent updates occur at variable intervals depending on application conditions. ModelGauge calculations outside the register are clamped at minimum and maximum register limits. Figure 4 shows the SOC register format.

Table 2. MODE Register Commands

VALUE	COMMAND	DESCRIPTION
4000h	Quick-Start	See the *Quick-Start* description section.

MODE Register

The MODE register allows the host processor to send special commands to the IC (Table 2). Valid MODE register write values are listed as follows. All other MODE register values are reserved.

VERSION Register

The VERSION register is a read-only register that contains a value indicating the production version of the MAX17043/MAX17044.

CONFIG Register

The CONFIG register compensates the ModelGauge algorithm, controls the alert interrupt feature, and forces the IC into Sleep mode through software. The format of CONFIG is shown in Figure 5.

CONFIG

CONFIG is an 8-bit value that can be adjusted to optimize IC performance for different lithium chemistries or different operating temperatures. Contact Maxim for instructions for optimization. The power-up default value for CONFIG is 97h.

MSB—ADDRESS 02h

2^{11}	2^{10}	2^{9}	2^{8}	2^{7}	2^{6}	2^{5}	2^{4}

MSB LSB

0: BITS ALWAYS READ LOGIC 0

LSB—ADDRESS 03h

2^{3}	2^{2}	2^{1}	2^{0}	0	0	0	0

MSB LSB

UNITS: 1.25mV FOR MAX17043
2.50mV FOR MAX17044

Figure 3. VCELL Register Format

MSB—ADDRESS 04h

2^{7}	2^{6}	2^{5}	2^{4}	2^{3}	2^{2}	2^{1}	2^{0}

MSB LSB

LSB—ADDRESS 05h

2^{-1}	2^{-2}	2^{-3}	2^{-4}	2^{-5}	2^{-6}	2^{-7}	2^{-8}

MSB LSB

UNITS: 1.0%

Figure 4. SOC Register Format

MSB—ADDRESS 0Ch

RCOMP 2^7	RCOMP 2^6	RCOMP 2^5	RCOMP 2^4	RCOMP 2^3	RCOMP 2^2	RCOMP 2^1	RCOMP 2^0

MSB LSB

LSB—ADDRESS 0Dh

SLEEP	X	ALRT	ATHD 2^4	ATHD 2^3	ATHD 2^2	ATHD 2^1	ATHD 2^0

MSB LSB

ATHD UNITS: 1 LSB = 2'S COMPLEMENT 1%
ATHD RANGE: 11111b = 1%
00000b = 32%

Figure 5. CONFIG Register Format

SLEEP (Sleep Bit)

Writing SLEEP to logic 1 forces the ICs into Sleep mode. Writing SLEEP to logic 0 forces the ICs to exit Sleep mode. The power-up default value for SLEEP is logic 0.

X (Don't Care)

This bit reads as either a logic 0 or logic 1. This bit cannot be written.

ALRT (ALERT Flag)

This bit is set by the IC when the SOC register value falls below the alert threshold setting and an interrupt is generated. This bit can only be cleared by software. The power-up default value for ALRT is logic 0.

ATHD (Alert Threshold)

The alert threshold is a 5-bit value that sets the state of charge level where an interrupt is generated on the $\overline{\text{ALRT}}$ pin. The alert threshold has an LSb weight of 1% and can be programmed from 1% up to 32%. The threshold value is stored in two's-complement form (00000 = 32%, 00001 = 31%, 00010 = 30%, 11111 = 1%). The power-up default value for ATHD is 4% or 1Ch.

COMMAND Register

The COMMAND register allows the host processor to send special commands to the IC. Valid COMMAND register write values are listed as follows. All other COMMAND register values are reserved. Table 3 shows COMMAND register commands.

Table 3. COMMAND Register Commands

VALUE	COMMAND	DESCRIPTION
5400h	POR	See the *Power-On Reset (POR)* section.

Application Examples

The MAX17043/MAX17044 have a variety of configurations, depending on the application. Table 4 shows the most common system configurations and the proper pin connections for each.

Table 4. Possible Application Configurations

SYSTEM CONFIGURATION	IC	V_{DD}	ALRT	QSTRT
1S Pack-Side Location	MAX17043	Power directly from battery	Leave unconnected	Connect to GND
1S Host-Side Location	MAX17043	Power directly from battery	Leave unconnected	Connect to GND
1S Host-Side Location, Low Cell Interrupt	MAX17043	Power directly from battery	Connect to system interrupt	Connect to GND
1S Host-Side Location, Hardware Quick-Start	MAX17043	Power directly from battery	Leave unconnected	Connect to rising-edge reset signal
2S Pack-Side Location	MAX17044	Power from +2.5V to +4.5V LDO in pack	Leave unconnected	Connect to GND
2S Host-Side Location	MAX17044	Power from +2.5V to +4.5V LDO or PMIC	Leave unconnected	Connect to GND
2S Host-Side Location, Low Cell Interrupt	MAX17044	Power from +2.5V to +4.5V LDO or PMIC	Connect to system interrupt	Connect to GND
2S Host-Side Location, Hardware Quick-Start	MAX17044	Power from +2.5V to +4.5V LDO or PMIC	Leave unconnected	Connect to rising-edge reset signal

Compact, Low-Cost 1S/2S Fuel Gauges with Low-Battery Alert

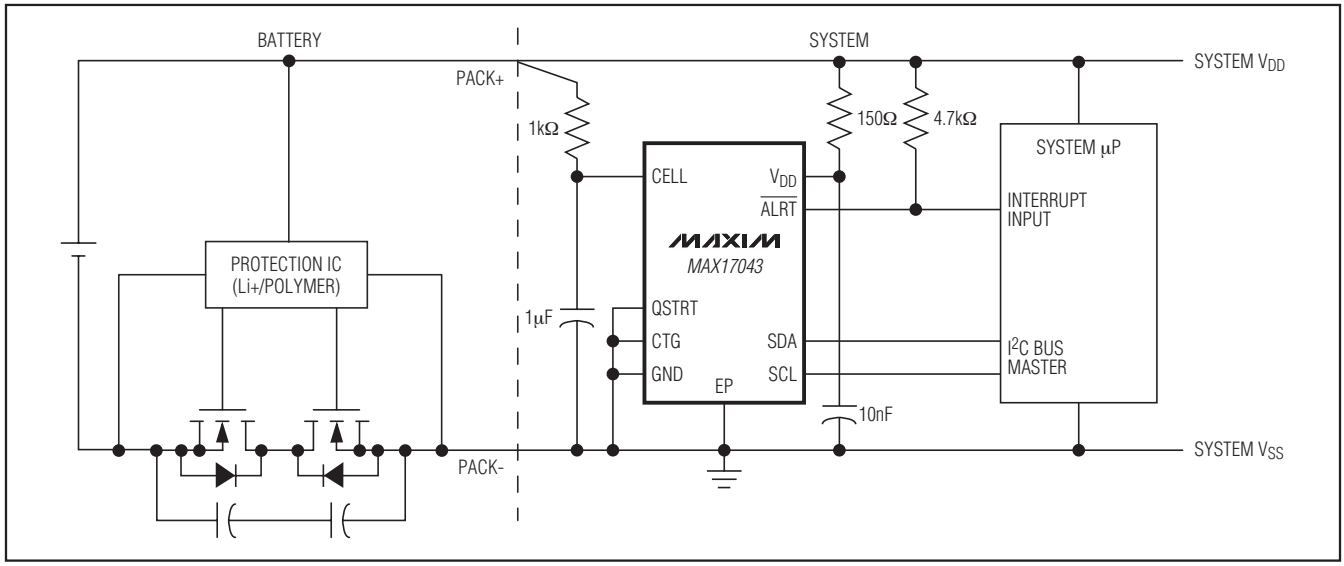

Figure 6. MAX17043 Application Example with Alert Interrupt

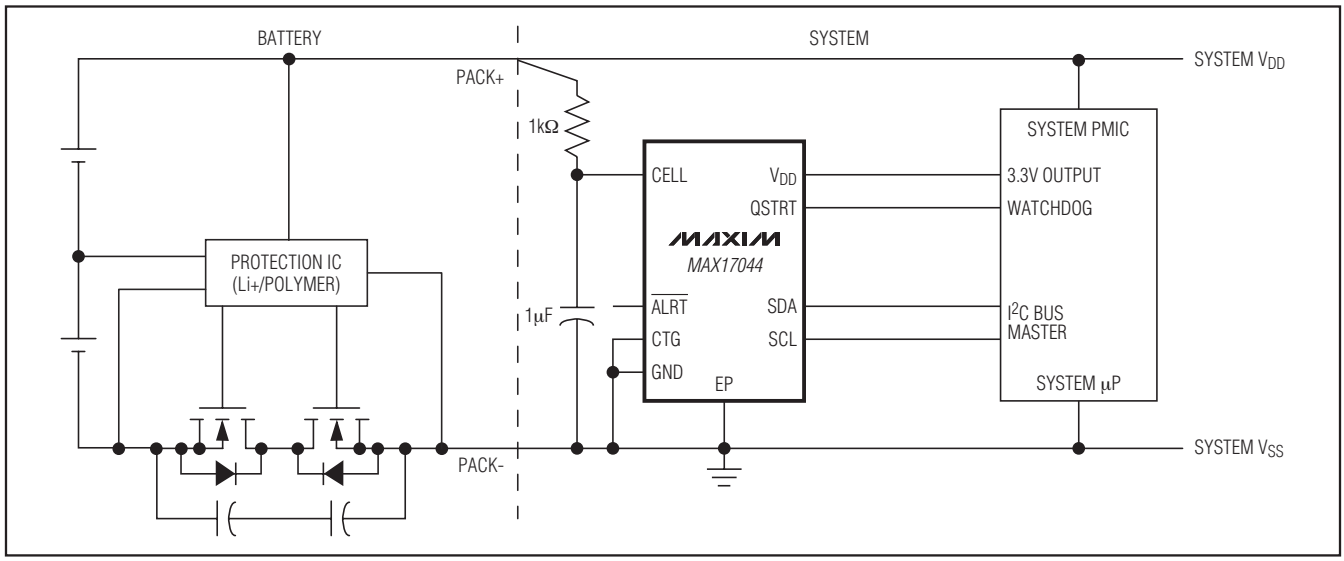

Figure 7. MAX17044 Application Example with Hardware Reset

Figure 6 shows an example application for a 1S cell pack. The MAX17043 is mounted on the system side and powered directly from the cell pack. The external RC networks on V_{DD} and CELL provide noise filtering of the IC power supply and A/D measurement. In this example, the $\overline{ALRT}$ pin is connected to the microprocessor's interrupt input to allow the MAX17043 to signal when the battery is low. The QSTRT pin is unused in this application, so it is tied to GND.

Figure 7 shows a MAX17044 example application using a 2S cell pack. The MAX17044 is mounted on the system side and powered from a 3.3V supply generated by the system. The CELL pin is still connected directly to PACK+ through an external noise filter. The $\overline{ALRT}$ pin is left unconnected because the interrupt feature is not used in this application. After power is supplied, the system watchdog generates a low-to-high transition on the QSTRT pin to signal the MAX17044 to perform a quick-start.

2-Wire Bus System

The 2-wire bus system supports operation as a slave-only device in a single or multislave, and single or multimaster system. Slave devices can share the bus by uniquely setting the 7-bit slave address. The 2-wire interface consists of a serial-data line (SDA) and serial-clock line (SCL). SDA and SCL provide bidirectional communication between the MAX17043/MAX17044 slave device and a master device at speeds up to 400kHz. The MAX17043/MAX17044s' SDA pin operates bidirectionally; that is, when the MAX17043/MAX17044 receive data, SDA operates as an input, and when the MAX17043/MAX17044 return data, SDA operates as an open-drain output, with the host system providing a resistive pullup. The MAX17043/MAX17044 always operate as a slave device, receiving and transmitting data under the control of a master device. The master initiates all transactions on the bus and generates the SCL signal, as well as the START and STOP bits, which begin and end each transaction.

Bit Transfer

One data bit is transferred during each SCL clock cycle, with the cycle defined by SCL transitioning low-to-high and then high-to-low. The SDA logic level must remain stable during the high period of the SCL clock pulse. Any change in SDA when SCL is high is interpreted as a START or STOP control signal.

Bus Idle

The bus is defined to be idle, or not busy, when no master device has control. Both SDA and SCL remain high when the bus is idle. The STOP condition is the proper method to return the bus to the idle state.

START and STOP Conditions

The master initiates transactions with a START condition (S) by forcing a high-to-low transition on SDA while SCL is high. The master terminates a transaction with a STOP condition (P), a low-to-high transition on SDA while SCL is high. A Repeated START condition (Sr) can be used in place of a STOP then START sequence to terminate one transaction and begin another without returning the bus to the idle state. In multimaster systems, a Repeated START allows the master to retain control of the bus. The START and STOP conditions are the only bus activities in which the SDA transitions when SCL is high.

Acknowledge Bits

Each byte of a data transfer is acknowledged with an acknowledge bit (A) or a no-acknowledge bit (N). Both the master and the MAX17043 slave generate acknowledge bits. To generate an acknowledge, the receiving device must pull SDA low before the rising edge of the acknowledge-related clock pulse (ninth pulse) and keep it low until SCL returns low. To generate a no-acknowledge (also called NAK), the receiver releases SDA before the rising edge of the acknowledge-related clock pulse and leaves SDA high until SCL returns low. Monitoring the acknowledge bits allows for detection of unsuccessful data transfers. An unsuccessful data transfer can occur if a receiving device is busy or if a system fault has occurred. In the event of an unsuccessful data transfer, the bus master should reattempt communication.

Data Order

A byte of data consists of 8 bits ordered most significant bit (MSb) first. The least significant bit (LSb) of each byte is followed by the acknowledge bit. The MAX17043/MAX17044 registers composed of multibyte values are ordered MSb first. The MSb of multibyte registers is stored on even data-memory addresses.

Slave Address

A bus master initiates communication with a slave device by issuing a START condition followed by a slave address (SAddr) and the read/write (R/W) bit. When the bus is idle, the MAX17043/MAX17044 continuously monitor for a START condition followed by its slave address. When the MAX17043/MAX17044 receive a slave address that matches the value in the slave address register, they respond with an acknowledge bit during the clock period following the R/W bit. The 7-bit slave address is fixed to 6Ch (write)/6Dh (read):

MAX17043/MAX17044 SLAVE ADDRESS	**0110110**

Read/Write Bit

The R/W bit following the slave address determines the data direction of subsequent bytes in the transfer. R/W = 0 selects a write transaction, with the following bytes being written by the master to the slave. R/W = 1 selects a read transaction, with the following bytes being read from the slave by the master. (Table 5).

Compact, Low-Cost 1S/2S Fuel Gauges with Low-Battery Alert

Table 5. 2-Wire Protocol Key

KEY	DESCRIPTION	KEY	DESCRIPTION
S	START bit	Sr	Repeated START
SAddr	Slave address (7 bit)	W	R/W bit = 0
MAddr	Memory address byte	P	STOP bit
Data	Data byte written by master	Data	Data byte returned by slave
A	Acknowledge bit—master	A	Acknowledge bit—slave
N	No acknowledge—master	N	No acknowledge—slave

Bus Timing

The MAX17043/MAX17044 are compatible with any bus timing up to 400kHz. No special configuration is required to operate at any speed.

2-Wire Command Protocols

The command protocols involve several transaction formats. The simplest format consists of the master writing the START bit, slave address, R/W bit, and then monitoring the acknowledge bit for presence of the MAX17043/MAX17044. More complex formats, such as the Write Data and Read Data, read data and execute device-specific operations. All bytes in each command format require the slave or host to return an acknowledge bit before continuing with the next byte. Table 5 shows the key that applies to the transaction formats.

Basic Transaction Formats

Write: S. SAddr W. A. MAddr. A. Data0. A. Data1. A. P

A write transaction transfers 2 or more data bytes to the MAX17043/MAX17044. The data transfer begins at the memory address supplied in the MAddr byte. Control of the SDA signal is retained by the master throughout the transaction, except for the acknowledge cycles:

Read: $\underbrace{\text{S. SAddr W. A. MAddr. A.}}_{\text{Write Portion}}$ $\underbrace{\text{Sr. SAddr R. A. Data0. A. Data1. N. P}}_{\text{Read Portion}}$

A read transaction transfers 2 or more bytes from the MAX17043/MAX17044. Read transactions are composed of two parts, a write portion followed by a read portion, and are therefore inherently longer than a write transaction. The write portion communicates the starting point for the read operation. The read portion follows immediately, beginning with a Repeated START, slave address with R/W set to a 1. Control of SDA is assumed by the MAX17043/MAX17044, beginning with the slave address acknowledge cycle. Control of the SDA signal is retained by the MAX17043/MAX17044 throughout the transaction, except for the acknowledge cycles. The master indicates the end of a read transaction by responding to the last byte it requires with a no acknowledge. This signals the MAX17043/MAX17044 that control of SDA is to remain with the master following the acknowledge clock.

Write Data Protocol

The write data protocol is used to write to register to the MAX17043/MAX17044 starting at memory address MAddr. Data0 represents the data written to MAddr, Data1 represents the data written to MAddr + 1, and DataN represents the last data byte, written to MAddr + N. The master indicates the end of a write transaction by sending a STOP or Repeated START after receiving the last acknowledge bit:

SAddr W. A. MAddr. A. Data0. A. Data1. A... DataN. A

The MSB of the data to be stored at address MAddr can be written immediately after the MAddr byte is acknowledged. Because the address is automatically incremented after the LSB of each byte is received by the MAX17043/MAX17044, the MSB of the data at address MAddr + 1 can be written immediately after the acknowledgment of the data at address MAddr. If the bus master continues an autoincremented write transaction beyond address 4Fh, the MAX17043/MAX17044 ignore the data. A valid write must include both register bytes. Data is also ignored on writes to read-only addresses. Incomplete bytes and bytes that are not acknowledged by the MAX17043/MAX17044 are not written to memory.

Read Data Protocol

The read data protocol is used to read to register from the MAX17043/MAX17044 starting at the memory address specified by MAddr. Both register bytes must be read in the same transaction for the register data to be valid. Data0 represents the data byte in memory location MAddr, Data1 represents the data from MAddr + 1, and DataN represents the last byte read by the master:

S. SAddr W. A. MAddr. A. Sr. SAddr R. A.
Data0. A. Data1. A... DataN. N. P

Data is returned beginning with the MSB of the data in MAddr. Because the address is automatically incremented after the LSB of each byte is returned, the MSB of the data at address MAddr + 1 is available to the host immediately after the acknowledgment of the data at address MAddr. If the bus master continues to read beyond address FFh, the MAX17043/MAX17044 output data values of FFh. Addresses labeled Reserved in the memory map return undefined data. The bus master terminates the read transaction at any byte boundary by issuing a no acknowledge followed by a STOP or Repeated START.

Package Information

For the latest package outline information and land patterns, go to **www.maxim-ic.com/packages**. Note that a "+", "#", or "-" in the package code indicates RoHS status only. Package drawings may show a different suffix character, but the drawing pertains to the package regardless of RoHS status.

PACKAGE TYPE	PACKAGE CODE	DOCUMENT NO.
8 TDFN	T823+1	21-0174

Compact, Low-Cost 1S/2S Fuel Gauges with Low-Battery Alert

Revision History

REVISION NUMBER	REVISION DATE	DESCRIPTION	PAGES CHANGED
0	9/9	Initial release	—
1	4/10	Updated soldering temperature information; updated time for SCO and VCELL registers; removed asterisk from MAX17044	1, 2, 8

Maxim cannot assume responsibility for use of any circuitry other than circuitry entirely embodied in a Maxim product. No circuit patent licenses are implied. Maxim reserves the right to change the circuitry and specifications without notice at any time.

© 2010 Maxim Integrated Products Maxim is a registered trademark of Maxim Integrated Products, Inc.