HITACHI

KAOHSIUNG HITACHI
ELECTRONICS CO.,LTD
P.O. BOX 26-27
2,13TH EAST ST. K.E.P.Z.
KAOHSIUNG TAIWAN R.O.C.
TEL:(07) 8215811 (7 LINE)
FAX:(07) 821-5815

FOR MESSRS : STD

DATE : May.13,2008

CUSTOMER'S ACCEPTANCE SPECIFICATIONS

TX09D70VM1CBA

CONTENTS

No.	ITEM	SHEET No.	PAGE
1	COVER	7B64PS 2701-TX09D70VM1CBA-5	1-1/1
2	RECORD OF REVISION	7B64PS 2702-TX09D70VM1CBA-5	2-1/3~3/3
3	GENERAL DATA	7B64PS 2703-TX09D70VM1CBA-5	3-1/1
4	ABSOLUTE MAXIMUM RATINGS	7B64PS 2704-TX09D70VM1CBA-5	4-1/2~2/2
5	ELECTRICAL CHARACTERISTICS	7B64PS 2705-TX09D70VM1CBA-5	5-1/1
6	OPTICAL CHARACTERISTICS	7B64PS 2706-TX09D70VM1CBA-5	6-1/2~2/2
7	BLOCK DIAGRAM	7B64PS 2707-TX09D70VM1CBA-5	7-1/2~2/2
8	INTERFACE TIMING CHART	7B64PS 2708-TX09D70VM1CBA-5	8-1/10~10/10
9	DIMENSIONAL OUTLINE	7B63PS 2709-TX09D70VM1CBA-5	9-1/1
10	APPEARANCE STANDARD	7B64PS 2710-TX09D70VM1CBA-5	10-1/3~3/3
11	PRECAUTION IN DESIGN	7B64PS 2711-TX09D70VM1CBA-5	11-1/2~2/2
12	DESIGNATION OF LOT MARK	7B64PS 2712-TX09D70VM1CBA-5	12-1/1
13	PRECAUTION FOR USE	7B64PS 2713-TX09D70VM1CBA-5	13-1/1

*When product will be discontinued, customer will be informed by HITACHI with twelve months prior announcement.

ACCEPTED BY;

PROPOSED BY; Dan Chang

RECORD OF REVISION

DATE	SHEET No.	SUMMARY
Jul.08,'05	7B64PS 2704-TX09D70VM1CBA-2 PAGE 4-2/2	4.3 ENVIRONMENTAL ABSOLUTE MAXIMUM RATINGS Revised

ITEM	OPERATING		STORAGE	
	Min.	Max.	Min.	Max.
Ambient Temperature	(-20℃)	(70℃)	(-30℃)	(80℃)

↓

ITEM	OPERATING		STORAGE	
	Min.	Max.	Min.	Max.
Ambient Temperature	-20℃	70℃	-30℃	80℃

7B64PS 2705-TX09D70VM1CBA-2 PAGE 5-1/1

5.1 ELECTRICAL CHARACTERISTICS

Revised

ITEM	SYMBOL	TYP.
Power supply Current	IDD	0.52
	IAVDD	2.5
	IGH	0.028
	IGL	0.028

↓

ITEM	SYMBOL	TYP.
Power supply Current	IDD	0.56
	IAVDD	2.3
	IGH	0.033
	IGL	0.028

7B64PS 2708-TX09D70VM1CBA-2 PAGE 8-3/10

8.1 INTERFACE TIMING
Revised all of page for Source and Gate Driver setting.

7B64PS 2708-TX09D70VM1CBA-2 PAGE 8-4/10

8.1 INTERFACE TIMING
Revised Horizontal Timing Sequence of CL1 and CL2.

7B64PS 2708-TX09D70VM1CBA-2 PAGE 8-5/10

8.2 POWER ON/OFF SEQUENCE
Deleted PCI setting and Note.

7B64PS 2708-TX09D70VM1CBA-2 PAGE 8-9/10

8.5 POWER SUPPLY CIRCUIT FOR LED BL
Added Power Supply Circuit for LED BL

RECORD OF REVISION

DATE	SHEET No.	SUMMARY
Sep.8,'05	7B64PS 2705-TX09D70VM1CBA-3 PAGE 6-1/2	6.1 OPTICAL CHARACTERISTICS OF LCD Revised

ITEM	SYMBOL	TYP.		TYP.
Brightness	B	430		(400)
Viewing Angle	θx	65	→	(70)
	θx'	65		(70)
	θy	80		(80)
	θy'	40		(60)

Added the MIN. & MAX. of Color Tone.

	7B64PS 2705-TX09D70VM1CBA-3 PAGE 8-5/10	8.3 POWER OM/OFF SEQUENCE Added the timing of DISP.
	7B64PS 2705-TX09D70VM1CBA-3 PAGE 8-8/10	8.5 POWER SUPPLY CIRCUIT FOR LCD Removed V4
	7B64PS 2705-TX09D70VM1CBA-3 PAGE 8-10/10	8.7 INTERNAL PIN CONNECTION Revised the function of PIN2(DISP) & PIN32(V4) Added Note1 ~ 3
Oct.13,'05	7B64PS 2704-TX09D70VM1CBA-4 PAGE 4-1/2	4.1 ELECTRICAL ABSOLUTE MAXIMUM RATINGS OF LCD Revised

ITEM		SYMBOL	MAX.
LED	Forward Current	IF	25
	Pulse Forward Current	I_{FP}	80

↓

ITEM		SYMBOL	MAX.
LED	Forward Current	IF	35
	Pulse Forward Current	I_{FP}	100

Note 4 :

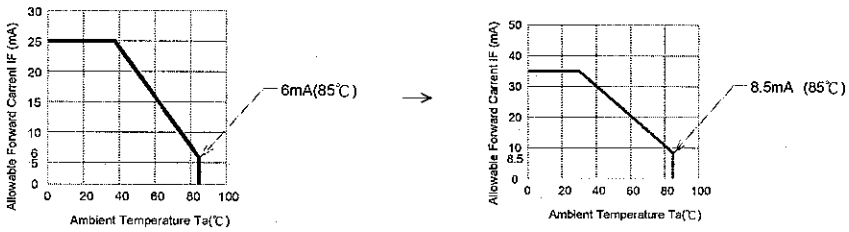

Note 5 :

IFP Conditions : pulse width≦10ms and Duty≦1/10

IFP Conditions : pulse width≦10ms and Duty≦1/10

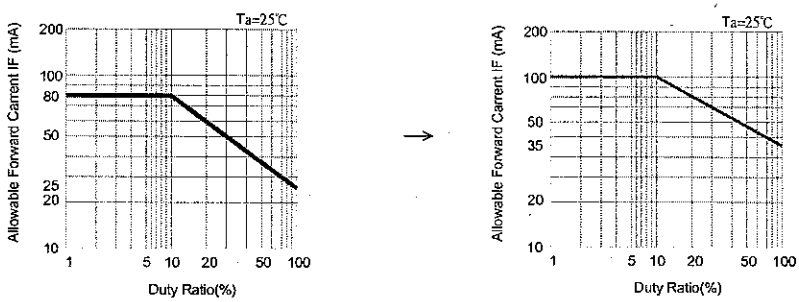

RECORD OF REVISION

<table>
<tr><th>DATE</th><th>SHEET No.</th><th>SUMMARY</th></tr>
<tr><td rowspan="2">Oct.13,'05</td><td>7B64PS 2705-
TX09D70VM1CBA-4
PAGE 5-1/2</td><td>5.2 ELECTRICAL CHARACTERISTICS OF BACK LIGHT
Revised
<table>
<tr><th>ITEM</th><th>SYMBOL</th><th>CONDITION</th><th>MAX.</th><th>TYP.</th><th>MAX.</th></tr>
<tr><td>LED
Input Voltage</td><td>VF</td><td>IF=20mA</td><td>-</td><td>3.75</td><td>4.2</td></tr>
<tr><td>LED
Forward Current</td><td>IF</td><td>-</td><td>-</td><td>20</td><td>20</td></tr>
</table>
↓
<table>
<tr><th>ITEM</th><th>SYMBOL</th><th>CONDITION</th><th>MAX.</th><th>TYP.</th><th>MAX.</th></tr>
<tr><td>LED
Input Voltage</td><td>VF</td><td>IF=20mA</td><td>-</td><td>3.2</td><td>3.5</td></tr>
<tr><td>LED
Forward Current</td><td>IF</td><td>-</td><td>-</td><td>20</td><td>25</td></tr>
</table></td></tr>
<tr><td>7B64PS 2706-
TX09D70VM1CBA-4
PAGE 6-1/2</td><td>6.1 OPTICAL CHARACTERISTICS OF LCD
Revised Brightness and Color Tone of SPEC</td></tr>
<tr><td>May.13,'08</td><td>7B64PS 2712-
TX09D70VM1CBA-5
PAGE 12-1/1</td><td>12.2 Location of lot mark
Lot mark change: Print on FPC → Barcode label</td></tr>
</table>

3.GENERAL DATA

The specifications are applied to the following TFT-LCD (Transmissive with Micro Reflectance) module with Back-light unit.
Note : Driving circuit for LED, timing controller and power unit is not built in this module.

(1)	Part Name	TX09D70VM1CBA
(2)	Module Dimensions	64.0(W)mm x 86.0(H)mm x 3.12(D)mm typ. (Except FPC Area)
(3)	Effective Display Area	53.64(W)mm x 71.52(H)mm (Diagonal:9cm)
(4)	Dot Pitch	0.0745mm x 3(R,G,B)(W) x 0.2235(H)mm
(5)	Resolution	240 x 3(R,G,B)(W) x 320 (H) dots
(6)	Color Pixel Arrangement	R,G,B Vertical Stripe
(7)	LCD Type	Transmissive Color TFT LCD (Normally White)
(8)	Display Type	Active Matrix
(9)	Number of Colors	262^{K} Colors (R,G,B 6 Bit Digital each)
(10)	Backlight	Light Emitting Diode (LED) x 6
(11)	Weight	36g
(12)	Interface	50 pin C-MOS
(13)	Viewing Direction	6 O'clock (The direction it's hard to be discolored)

4. ABSOLUTE MAXIMUM RATINGS

4.1 ELECTRICAL ABSOLUTE MAXIMUM RATINGS OF LCD

ITEM			SYMBOL	MIN.	MAX.	UNIT	REMARKS
Power Supply for Logic			DVDD	-0.3	4.6	V	
Source	Power Supply for LCD		AVDD	-0.3	11.0	V	(1)
	Input Voltage	High	V_{IH}	-0.3	AVDD+0.3	V	(2)
		Low	V_{IL}	-0.3	DVDD+0.3	V	
Gate	Power Supply for Gate	High	V_{GH}	-0.3	V_{GL}+35	V	
		Low	V_{GL}	-10	+0.3	V	
	Input Voltage		V_{IG}	-0.3	DVDD+0.3	V	(3)
LED	Forward Current		IF	-	35	mA	(4)
	Pulse Forward Current		I_{FP}	-	100	mA	(5)
	Reverse Voltage		V_R	-	5	V	
Static Electricity			-	-	±2	kV	(6) (7)

Note (1) AVDD-0.2≧V0 , V9≧GND+0.2
(2) LOAD(CL1) , CL2 , R0~R5 , G0~G5 , B0~B5 , M , POL , STH
(3) CL3 , DISP , STV

(4)

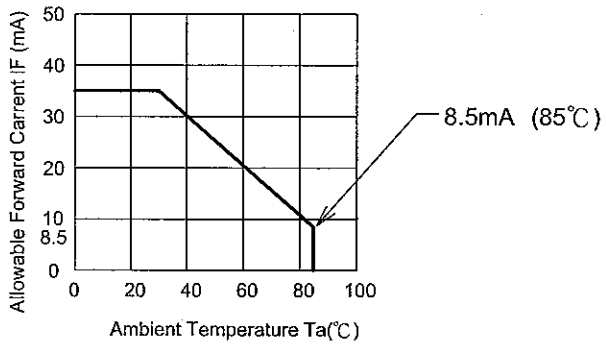

IFP Conditions : pulse width≦10ms and Duty≦1/10

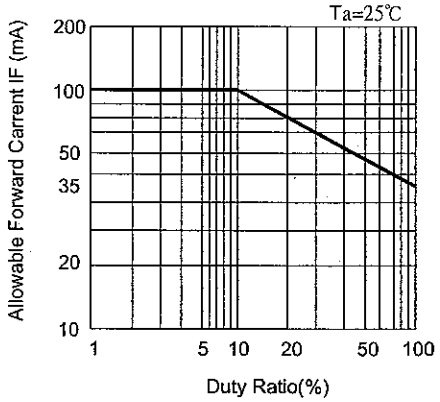

(6) Make certains you are grounded when handling LCM.
(7) Testing condition : 200pF - 0Ω, 25℃ - 70%RH.

4.2 ENVIRONMENTAL ABSOLUTE MAXIMUM RATINGS

ITEM	OPERATING		STORAGE		REMARKS
	Min.	Max.	Min.	Max.	
Ambient Temperature	-20℃	70℃	-30℃	80℃	(Note 2,3,6,7,9,10)
Humidity	(Note 1)		(Note 1)		Without condensation
Vibration	-	$2.45m/s^2$ (0.25G)	-	$11.76m/s^2$ (1.2G)	(Note 4,5)
Shock	-	$29.4m/s^2$ (3G)	-	$490m/s^2$ (50G)	(Note 5,8)
Corrosive Gas	Not Acceptable		Not Acceptable		

Note 1 : Ta≦40℃ : 85%RH max.
Ta＞40℃ : Absolute humidity must be lower than the humidity of 85%RH at 40℃.
Note 2 : For storage condition Ta at -30℃ < 48h , at 80℃ < 100h.
For operating condition Ta at -20℃ < 100h
Note 3 : Background color changes slightly depending on ambient temperature.
This phenomenon is reversible.
Note 4 : 5Hz~100Hz(Except resonance frequency)
Note 5 : This LCM will resume normal operation after finishing the test.
Note 6 : The response time will be slower as low temperature.
Note 7 : Only operation is guarantied at operating temperature. Contrast, response time, another display quality are evaluated at +25℃.
Note 8 : Pulse Width : 10ms
Note 9 : This is panel surface temperature , not ambient temperature.
Note 10 : When LCM be operated at high temperature , the life time of LED will be reduced .

5. ELECTRICAL CHARACTERISTICS

5.1 ELECTRICAL CHARACTERISTICS OF LCD

Ta=25℃

I T E M		SYMBOL	CONDITION	MIN.	TYP.	MAX.	UNIT
Power Supply for Logic		DVDD	-	2.3	3.3	3.6	V
Power Supply for LCD	Source	AVDD	-	7.5	8.48	9.5	V
	Gate	VGH	-	13.0	15.0	17.0	
		VGL	-	-8.0	-5.0	-2.0	
Power Supply Current		IDD	16 Vertical Gray scale	-	0.56	2.0	mA
		IAVDD		-	2.3	4.0	
		IGH		-	0.033	0.06	
		IGL		-	0.028	0.06	
Frame Frequency (Note 1)		fFLM	-	52	60	68	Hz

Note 1 : Need to make sure of flickering and rippling of display when setting the frame frequency in your set.

5.2 ELECTRICAL CHARACTERISTICS OF BACK LIGHT

ITEM	SYMBOL	CONDITION	MIN.	TYP.	MAX.	UNIT	REMARKS
LED Input Voltage	VF	IF=20mA	-	3.2	3.5	V	LED / Part
LED Forward Current	IF	-	-	20	25	mA	LED / Part
LED Reverse Current	IR	VR=5V	-	-	50	μA	LED / Part

6. OPTICAL CHARACTERISTICS

6.1 OPTICAL CHARACTERISTICS OF LCD (BACK LIGHT ON)

Ta=25℃

ITEM		SYMBOL	CONDITION	MIN.	TYP.	MAX.	UNIT	NOTE
Brightness		B	ϕ=0° θ=0°	-	(400)	-	cd/m^2	(1)
Uniformity		-	ϕ=0° θ=0°	70	-	-	%	(2),(3),(4)
Viewing Angle		θx	ϕ=0°,K≧5.0	-	(70)	-	deg	(5),(6)
		θx'	ϕ=180°,K≧5.0	-	(70)	-		
		θy	ϕ=90°,K≧5.0	-	(80)	-		
		θy'	ϕ=270°,K≧5.0	-	(60)	-		
Contrast Ratio		K	ϕ=0° θ=0°	180	300	-	-	(4)
Response Time (rise-fall)		tr+tf	ϕ=0° θ=0°	-	(30)	-	ms	(8)
Color Tone (Primary Color)	Red	x	ϕ=0° θ=0°	0.55	0.60	0.65	-	(4)
		y		0.29	0.34	0.39	-	
	Green	x		0.28	0.33	0.38	-	
		y		0.54	0.59	0.64	-	
	Blue	x		0.09	0.14	0.19	-	
		y		0.07	0.12	0.17	-	
	White	x		0.27	0.32	0.37	-	
		y		0.29	0.34	0.39	-	

(Measurement condition : HITACHI standard)

Note 1 : Active area center

Note (4)~(7) : See page 6-2/2

Note 2 : Driving Condition
Display Pattern : White Raster
LED Current : 20mA / Part
Measurement of the following
5 places on the display.

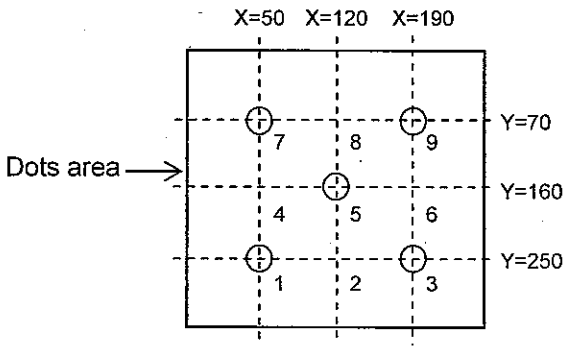

Note 3 : Definition of the brightness uniformity

$$\left(\frac{\text{Min. brightness}}{\text{Max. brightness}}\right) \times 100$$

Note 4 : Measurement Condition

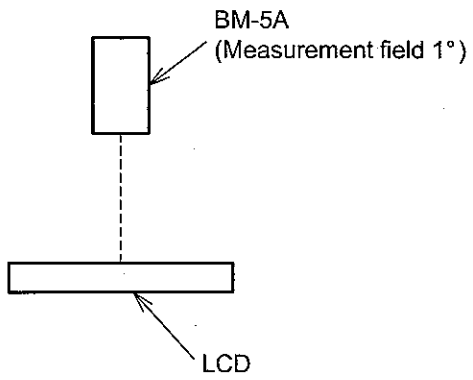

Note 5 : Definition of θ and ϕ

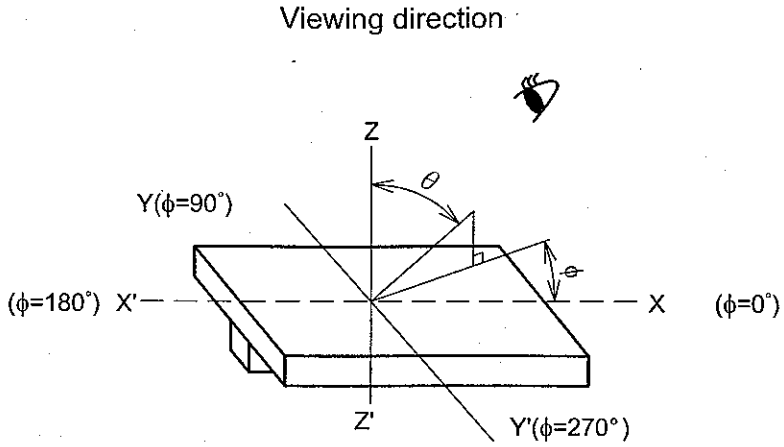

Note 6 : Definition of Viewing angle

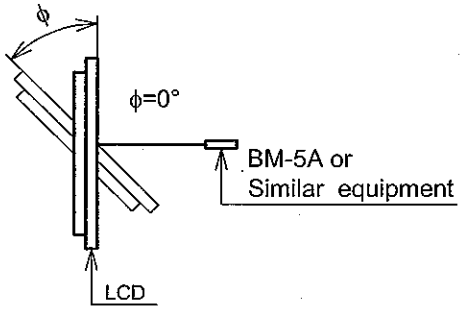

Note 7 : Definition of contrast "K"

$$K=\frac{\text{White Brightness}}{\text{Black Brightness}}$$

Note 8 : Definition optical response time

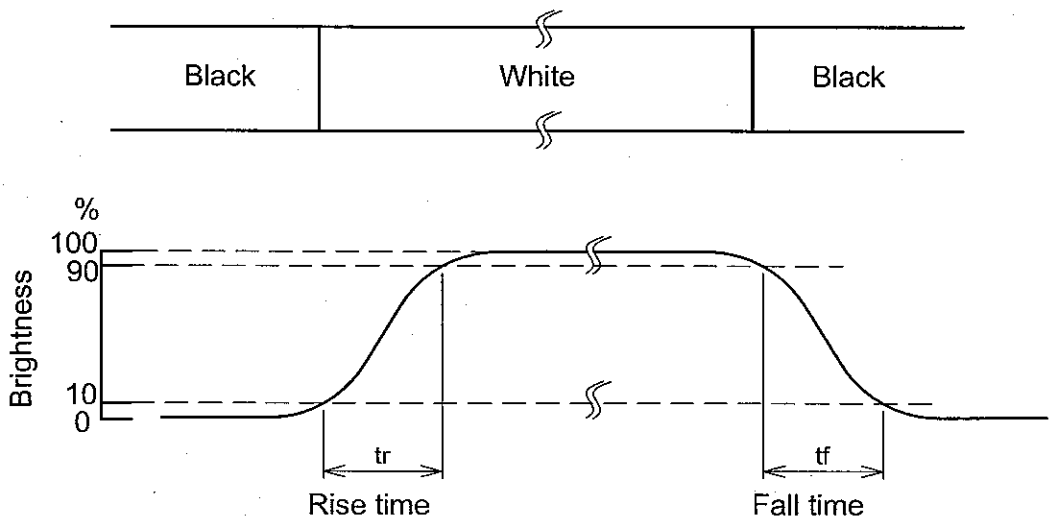

7. BLOCK DIAGRAM (REFERENCE ONLY)

Example 1

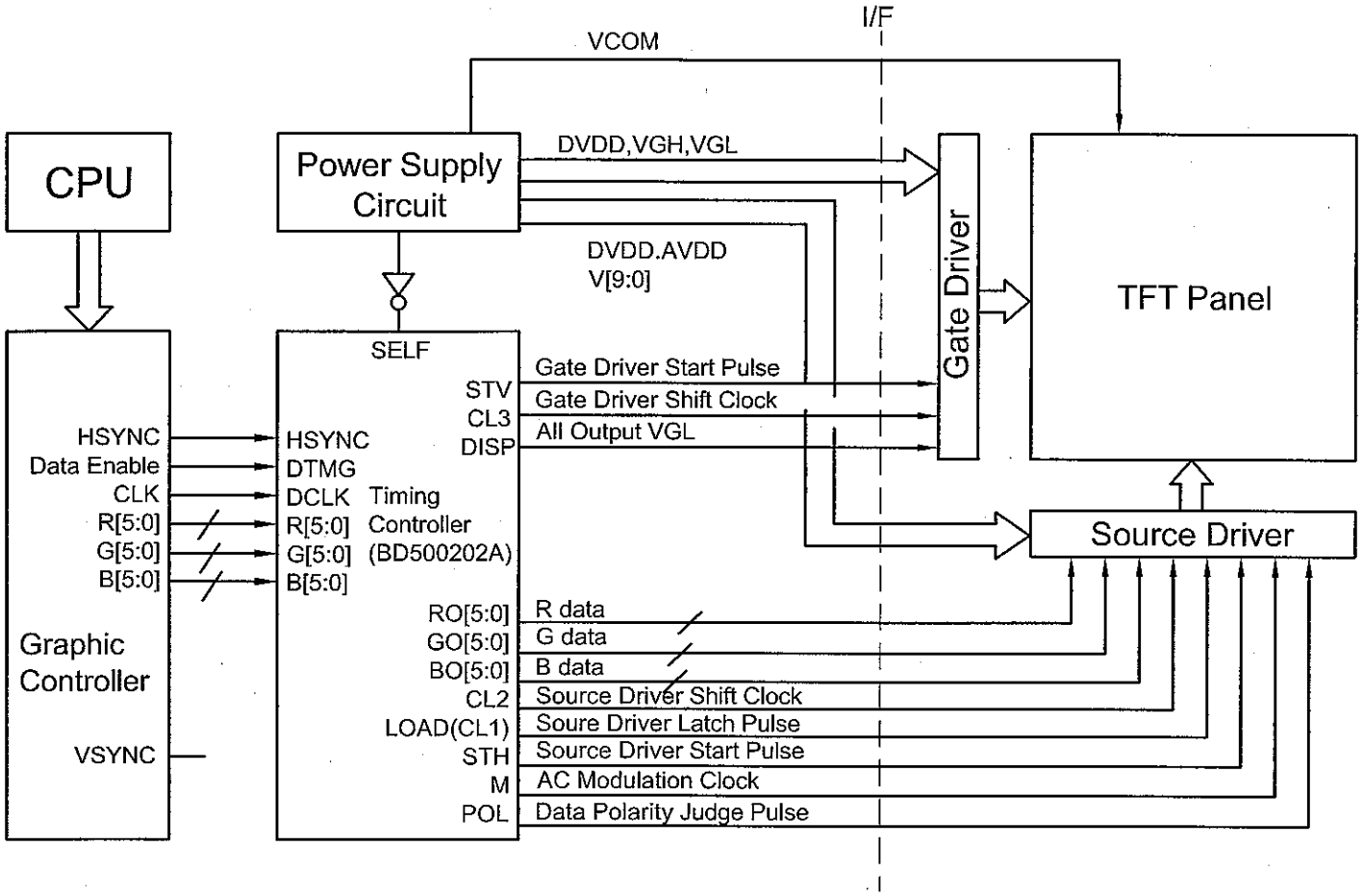

Example 2

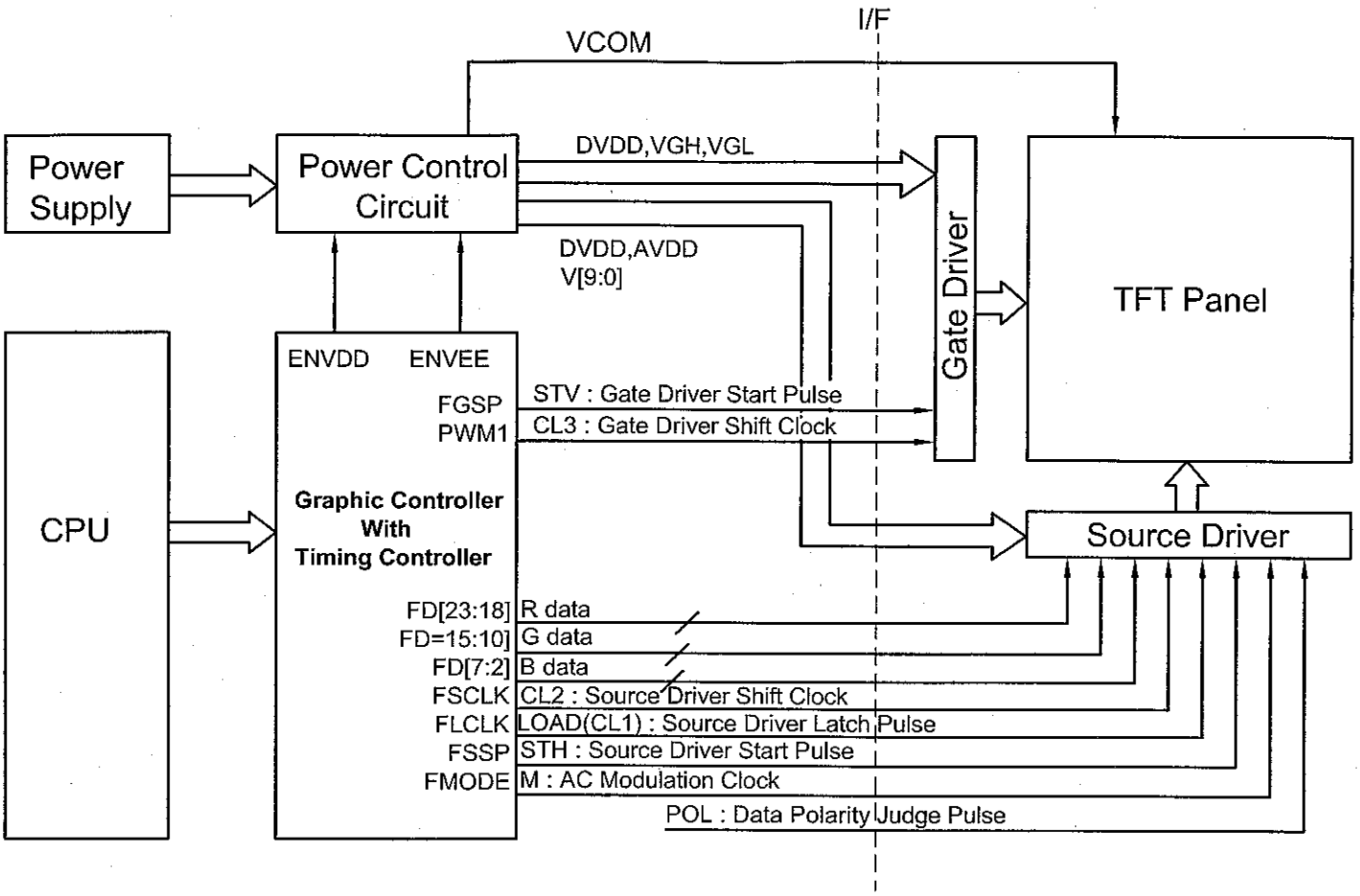
I/F
VCOM
Power Supply
Power Control Circuit
DVDD,VGH,VGL
DVDD,AVDD
V[9:0]
Gate Driver
TFT Panel
CPU
ENVDD
ENVEE
FGSP
PWM1
STV : Gate Driver Start Pulse
CL3 : Gate Driver Shift Clock
Graphic Controller With Timing Controller
Source Driver
FD[23:18] R data
FD=15:10] G data
FD[7:2] B data
FSCLK CL2 : Source Driver Shift Clock
FLCLK LOAD(CL1) : Source Driver Latch Pulse
FSSP STH : Source Driver Start Pulse
FMODE M : AC Modulation Clock
POL : Data Polarity Judge Pulse

8. INTERFACE TIMING

8.1 INTERFACE TIMING

	MIN.	TYP.	MAX.	UNIT	SYMBOL
Vertical Total	-	327	-	Line	T0
Vertical Sync Width	1	1	-	Line	T1
Vertical Sync Start	-	322	-	Line	T2
Vertical Sync End	-	323	-	Line	T3
Vertical Blank Time	5	7	-	Line	T4
Vertical Display End	-	320	-	Line	T5
Horizontal Total	258	273	509	Pixel Clock	T6
Horizontal Sync Width	4	5	10	Pixel Clock	T7
Horizontal Sync Start	246	251	307	Pixel Clock	T8
Horizontal Sync End	250	256	317	Pixel Clock	T9
Horizontal Blank Time	18	33	269	Pixel Clock	T10
Horizontal Display End	-	240	-	Pixel Clock	T11

Note : Vertical Total should be set to odd.

8.1.2 DRIVER TIMING

	Item	Symbol	Min.	Typ.	Max.	Unit.	Remark
Source Driver	Clock cycle time	Trate	100	-	-	ns	-
	Clock low level width	Tcwl	35	-	-	ns	-
	Clock high level width	Tcwh	35	-	-	ns	-
	Data set up time	Tds	25	-	-	ns	-
	Data hold time	Tdh	25	-	-	ns	-
	Start pulse set up time	Tss	25	-	-	ns	-
	Start pulse hold time	Tsh	25	-	-	ns	-
	CL1 high level width	Tcl1wh	10	-	-	us	-
	CL1 start pulse	Tscl1	100	-	-	ns	-
	STH start pulse	Tssth	100	-	-	ns	-
	M set up time	Tms	50	-	-	ns	-
	M hold time	Tmh	50	-	-	ns	-
Gate Driver	CL3 cycle time	Tcl3	2	3	-	us	-
	CL3 high level width	Tcl3wh	2	-	-	us	-
	CL3 low level width	Tcl3wl	2	-	-	us	-
	STV set up time	Tstvs	250	-	-	ns	-
	STV hold time	Tstvh	250	-	-	ns	-

8.2 TIMING CHART

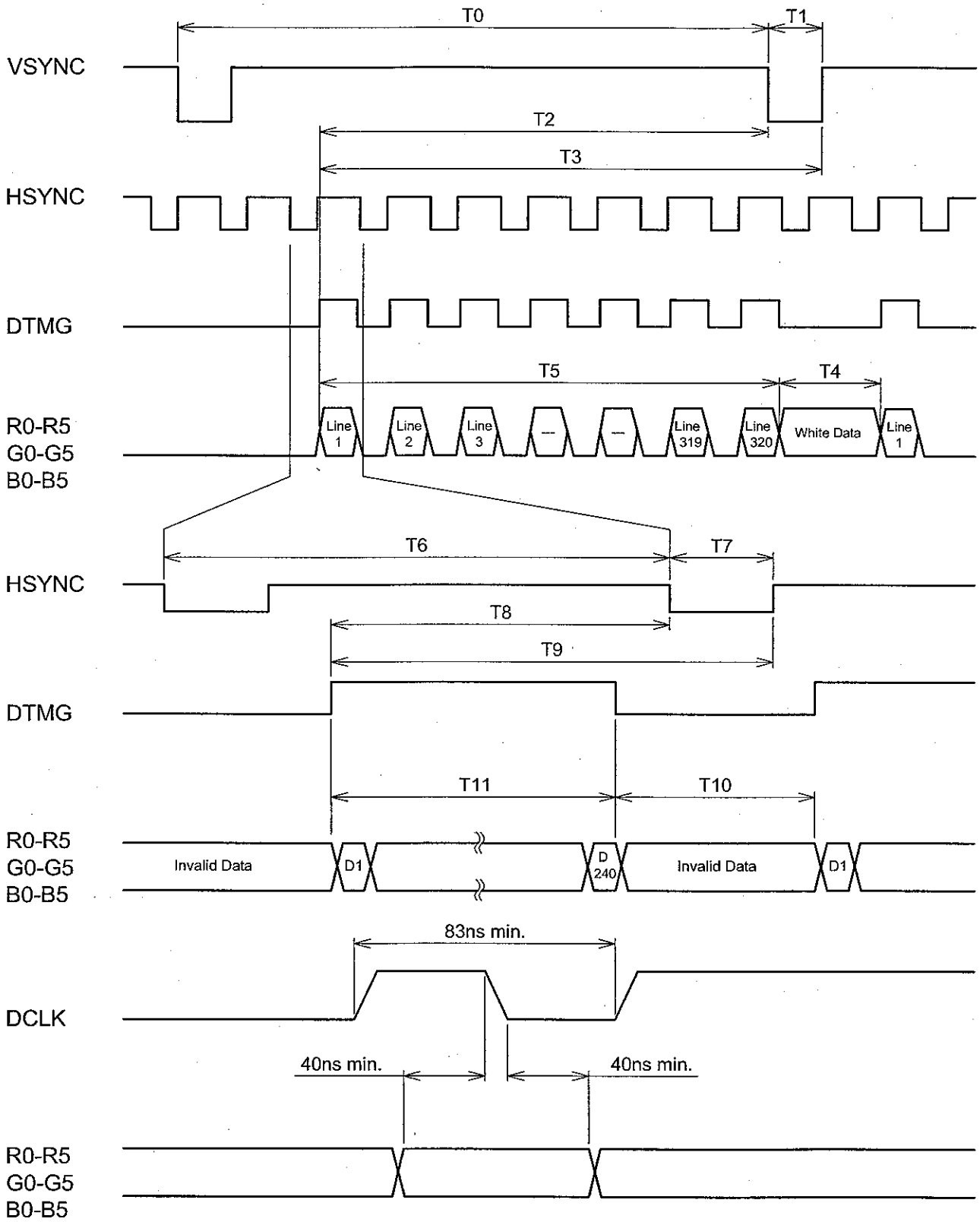

Fig1.Timing sequence for Graphic controller

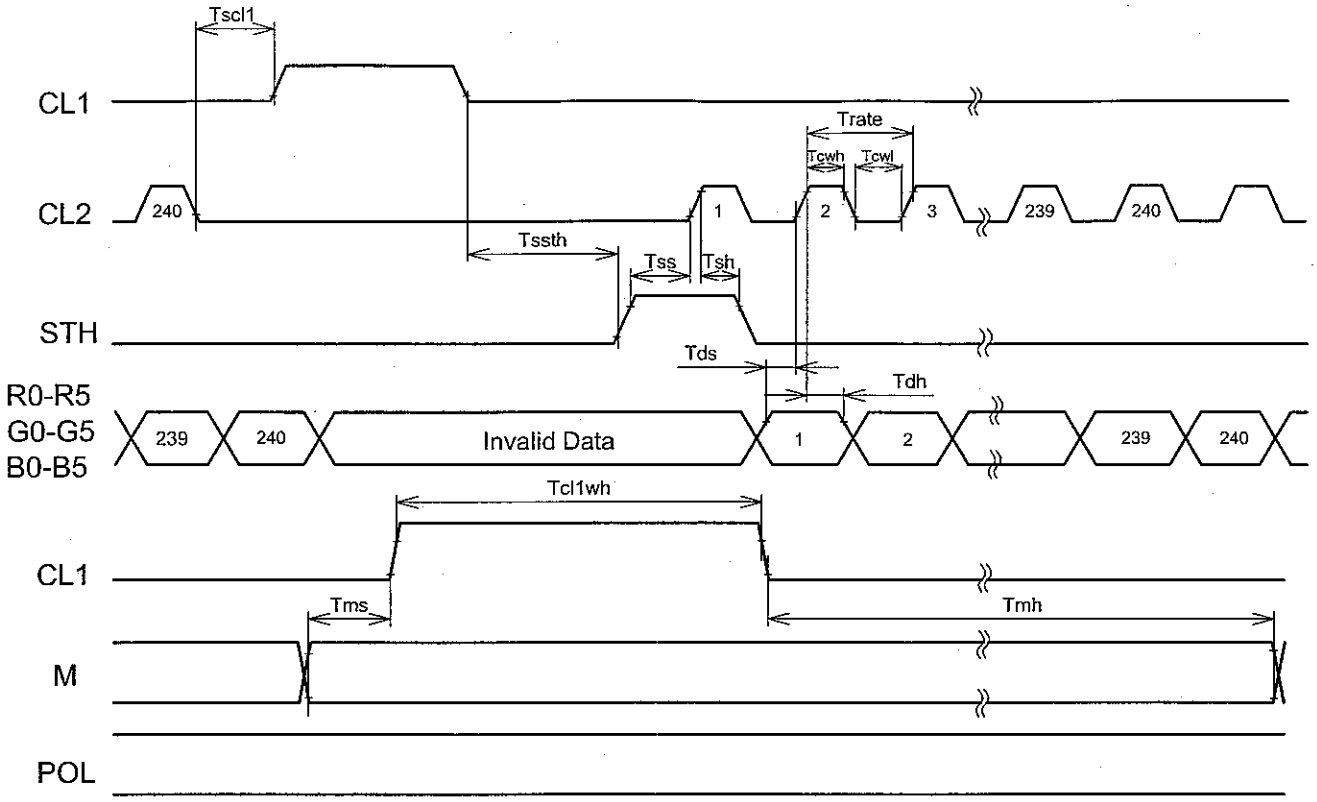

Fig2 . Horizontal Timing Sequence for non Tcon

Note: 0.8xDVDD 0.2xDVDD

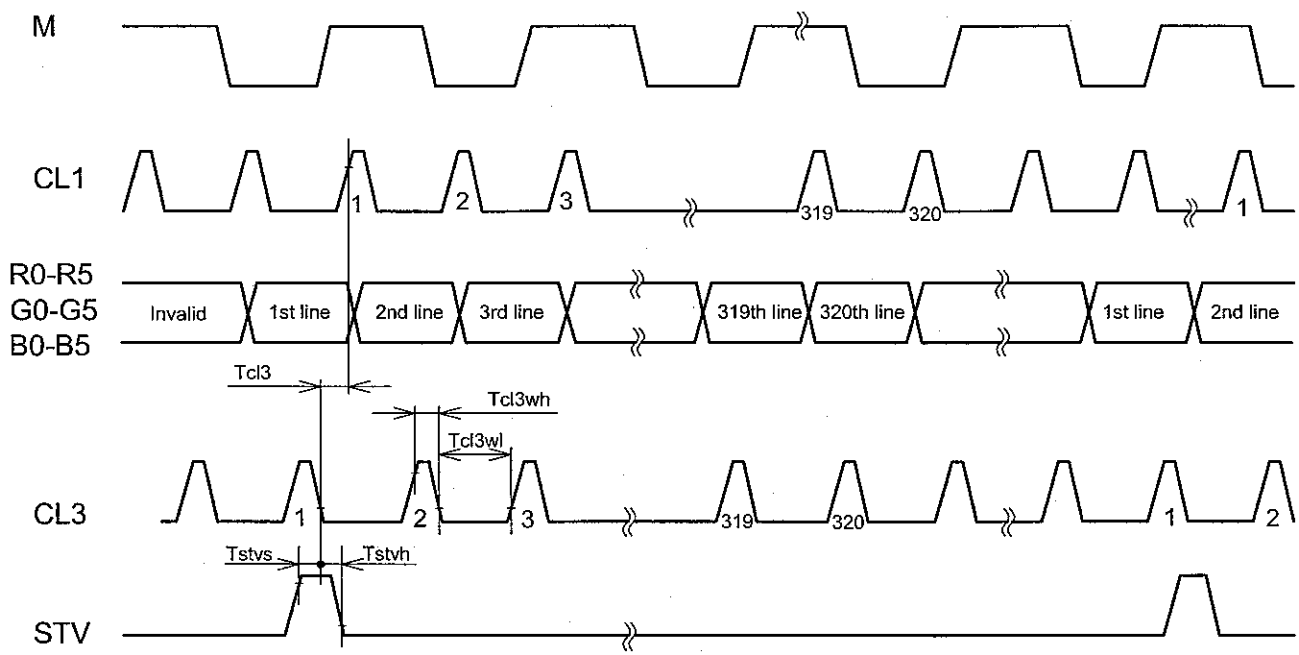

Fig3 . Vertical Timing Sequence for non Tcon

Note: 0.8xDVDD 0.2xDVDD

8.3 POWER ON/OFF SEQUENCE

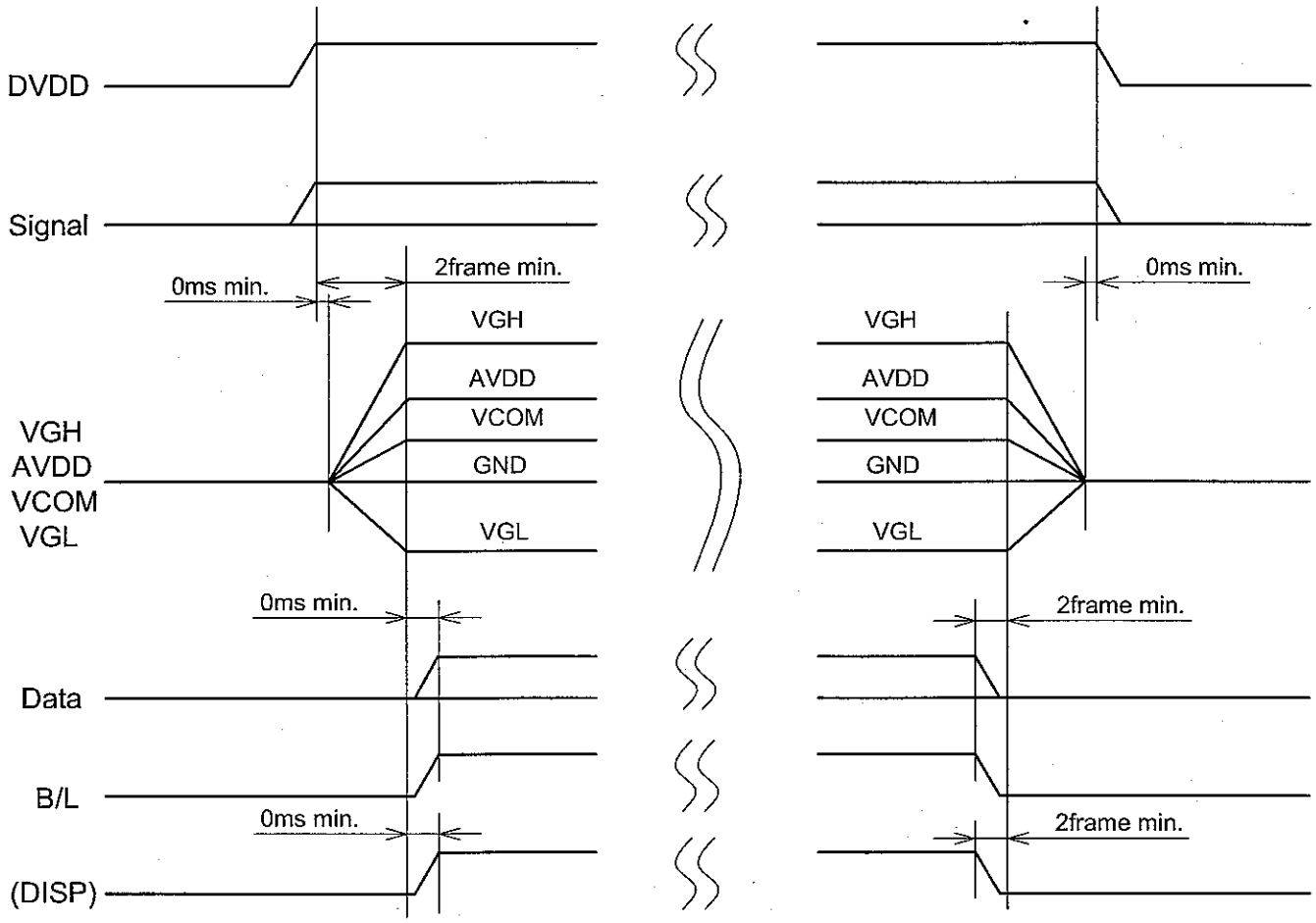

8.4 RELATIONSHIP BETWEEN DISPLAYED COLOR AND INPUT DATA

8.4.1 DISPLAY COLORS

color	Input	Red Data						Green Data						Blue Data					
		R5	R4	R3	R2	R1	R0	G5	G4	G3	G2	G1	G0	B5	B4	B3	B2	B1	B0
		MSB					LSB	MSB					LSB	MSB					LSB
Basic Color	Black	0	0	0	0	0	0	0	0	0	0	0	0	0	0	0	0	0	0
	Red(0)	1	1	1	1	1	1	0	0	0	0	0	0	0	0	0	0	0	0
	Green(0)	0	0	0	0	0	0	1	1	1	1	1	1	0	0	0	0	0	0
	Blue(0)	0	0	0	0	0	0	0	0	0	0	0	0	1	1	1	1	1	1
	Cyan	0	0	0	0	0	0	1	1	1	1	1	1	1	1	1	1	1	1
	Magenta	1	1	1	1	1	1	0	0	0	0	0	0	1	1	1	1	1	1
	Yellow	1	1	1	1	1	1	1	1	1	1	1	1	0	0	0	0	0	0
	White	1	1	1	1	1	1	1	1	1	1	1	1	1	1	1	1	1	1
Red	Black	0	0	0	0	0	0	0	0	0	0	0	0	0	0	0	0	0	0
	Red(62)	0	0	0	0	0	1	0	0	0	0	0	0	0	0	0	0	0	0
	Red(61)	0	0	0	0	1	0	0	0	0	0	0	0	0	0	0	0	0	0
	:	:	:	:	:	:	:	:	:	:	:	:	:	:	:	:	:	:	:
	:	:	:	:	:	:	:	:	:	:	:	:	:	:	:	:	:	:	:
	Red(2)	1	1	1	1	0	1	0	0	0	0	0	0	0	0	0	0	0	0
	Red(1)	1	1	1	1	1	0	0	0	0	0	0	0	0	0	0	0	0	0
	Red(0)	1	1	1	1	1	1	0	0	0	0	0	0	0	0	0	0	0	0
Green	Black	0	0	0	0	0	0	0	0	0	0	0	0	0	0	0	0	0	0
	Green(62)	0	0	0	0	0	0	0	0	0	0	0	1	0	0	0	0	0	0
	Green(61)	0	0	0	0	0	0	0	0	0	0	1	0	0	0	0	0	0	0
	:	:	:	:	:	:	:	:	:	:	:	:	:	:	:	:	:	:	:
	:	:	:	:	:	:	:	:	:	:	:	:	:	:	:	:	:	:	:
	Green(2)	0	0	0	0	0	0	1	1	1	1	0	1	0	0	0	0	0	0
	Green(1)	0	0	0	0	0	0	1	1	1	1	1	0	0	0	0	0	0	0
	Green(0)	0	0	0	0	0	0	1	1	1	1	1	1	0	0	0	0	0	0
Blue	Black	0	0	0	0	0	0	0	0	0	0	0	0	0	0	0	0	0	0
	Blue(62)	0	0	0	0	0	0	0	0	0	0	0	0	0	0	0	0	0	1
	Blue(61)	0	0	0	0	0	0	0	0	0	0	0	0	0	0	0	0	1	0
	:	:	:	:	:	:	:	:	:	:	:	:	:	:	:	:	:	:	:
	:	:	:	:	:	:	:	:	:	:	:	:	:	:	:	:	:	:	:
	Blue(2)	0	0	0	0	0	0	0	0	0	0	0	0	1	1	1	1	0	1
	Blue(1)	0	0	0	0	0	0	0	0	0	0	0	0	1	1	1	1	1	0
	Blue(0)	0	0	0	0	0	0	0	0	0	0	0	0	1	1	1	1	1	1

8.4.2 DATA ADDRESS

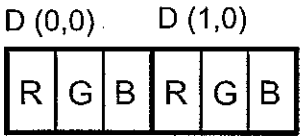

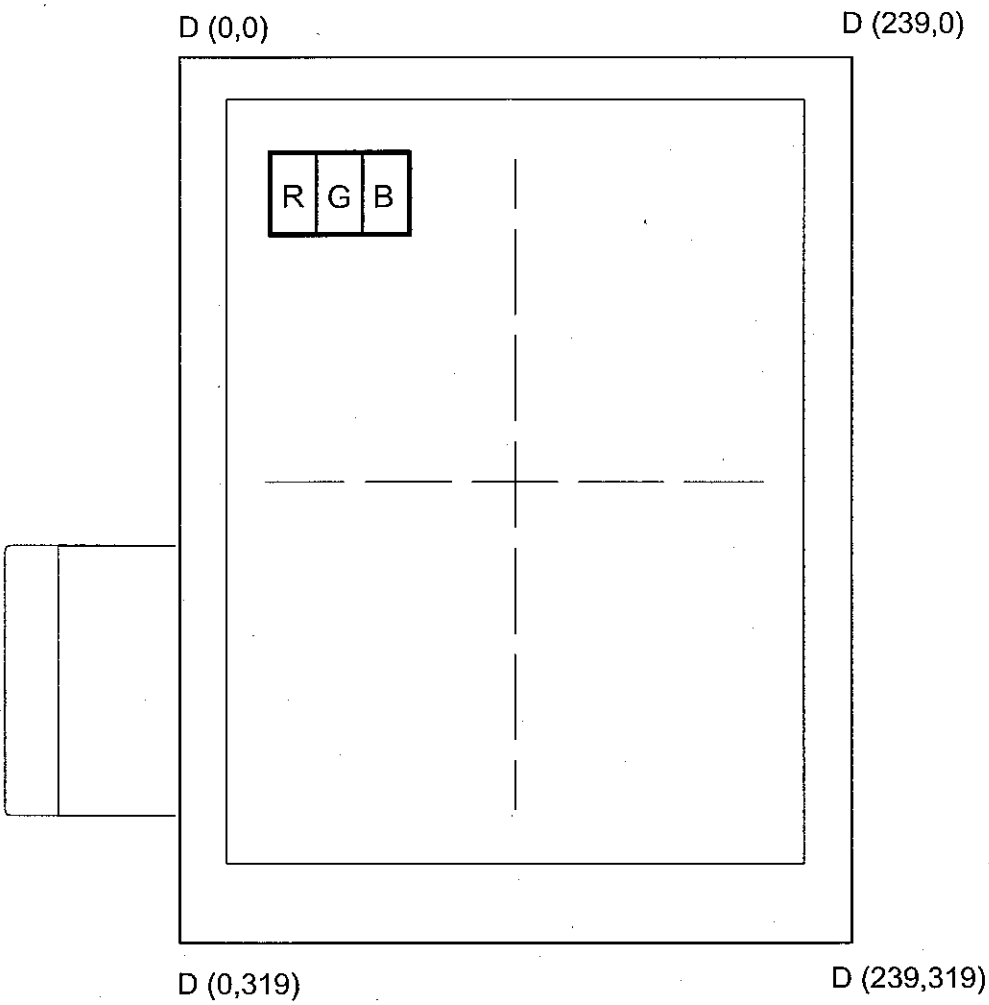

Top View

8.5 POWER SUPPLY CIRCUIT FOR LCD (REFERENCE ONLY)

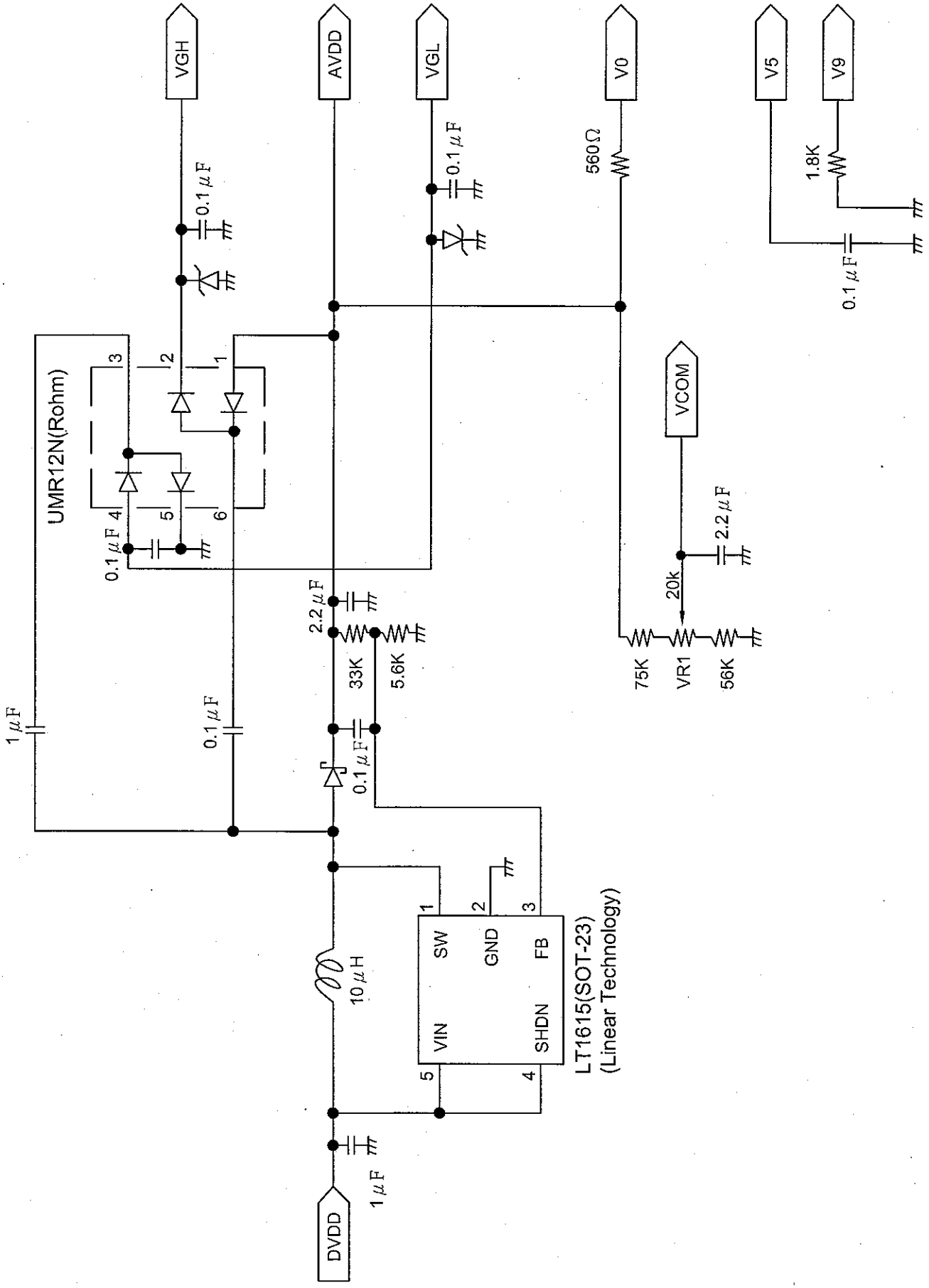

8.6 POWER SUPPLY CIRCUIT FOR LED BL (REFERENCE ONLY)

Example 1.
LED B/L

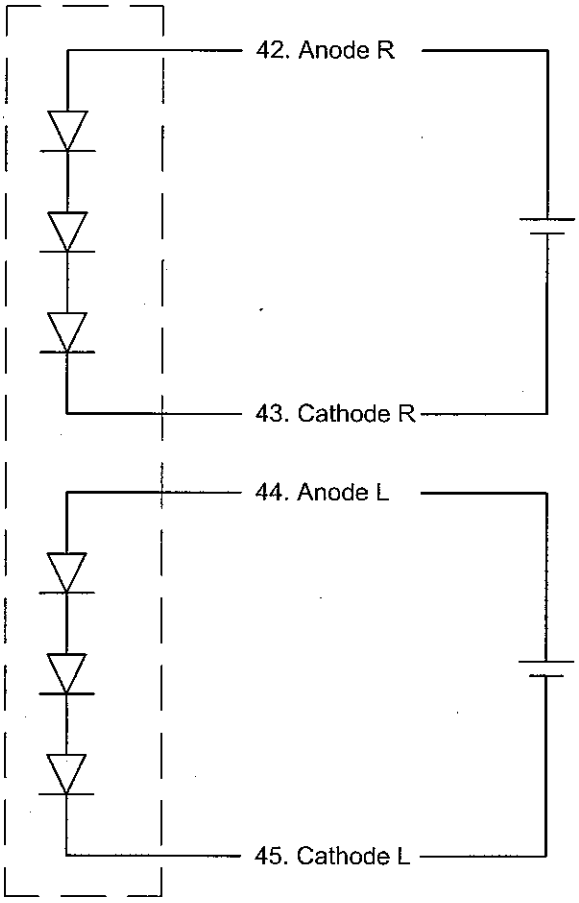

Example 2.
LED B/L

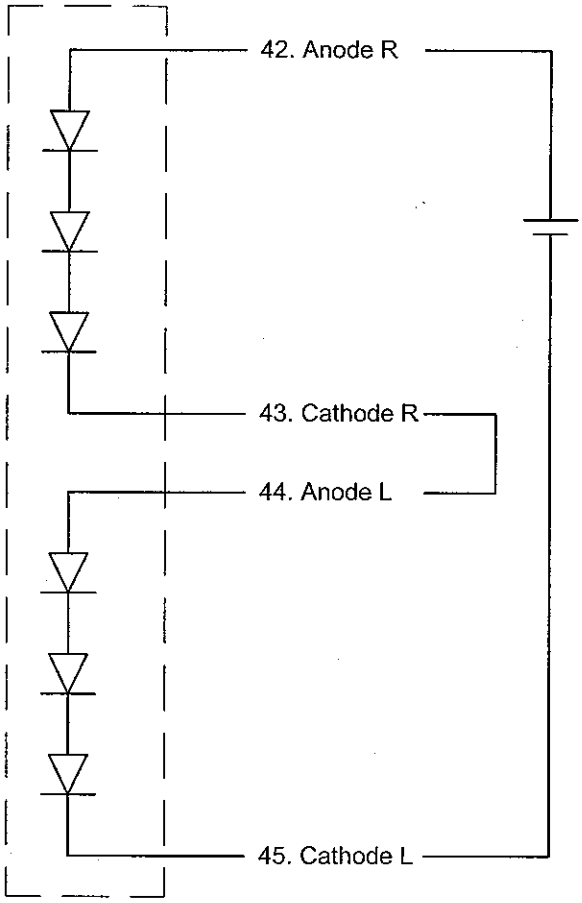

8.7 INTERNAL PIN CONNECTION

Suitable connector : FH12-50S-0.5P

No	SYMBOL	FUNCTION	No	SYMBOL	FUNCTION
1	VGH	Power Supply for Gate Driver (High)	26	B5	Blue Data
2	DISP	Display on/off (Note1.)	27	POL	Data Polarity Judge pulse(Note2)
3	CL3	Gate Driver Shift Clock	28	M	AC Modulation Clock
4	STV	Gate Driver Start Pulse	29	LOAD (CL1)	Source Driver Latch Pulse
5	VSS	GND	30	CL2	Source Driver Shift Clock
6	VGL	Power Supply for Gate Driver (Low)	31	V0	Gray Scale Voltage
7	VSS	GND	32	V4	No Conncetion (Note3.)
8	STH	Source Driver Start Pulse	33	AVDD	Power Supply for Source Driver
9	R0	Red Data	34	AVDD	Power Supply for Source Driver
10	R1	Red Data	35	V5	Gray Scale Voltage
11	R2	Red Data	36	V9	Gray Scale Voltage
12	R3	Red Data	37	DVDD	Power Supply for Logic
13	R4	Red Data	38	DVDD	Power Supply for Logic
14	R5	Red Data	39	VCOM	Common Voltage
15	G0	Green Data	40	VCOM	Common Voltage
16	G1	Green Data	41	VSS	GND
17	G2	Green Data	42	Anode R	LED Power Supply (+)
18	G3	Green Data	43	Cathode R	LED Power Supply (-)
19	G4	Green Data	44	Anode L	LED Power Supply (+)
20	G5	Green Data	45	Cathode L	LED Power Supply (-)
21	B0	Blue Data	46	VSS	GND
22	B1	Blue Data	47	NC	No Connection
23	B2	Blue Data	48	NC	No Connection
24	B3	Blue Data	49	NC	No Connection
25	B4	Blue Data	50	NC	No Connection

Note1. If you don't use Tcon IC, please follow page 8-5/10 to set the DISP's timing.
Note2. If you don't use Tcon IC, the POL must be connected to GND.
Note3. Keep open electrically, please follow the page 8-8/10.

9. DIMENSIONAL OUTLINE

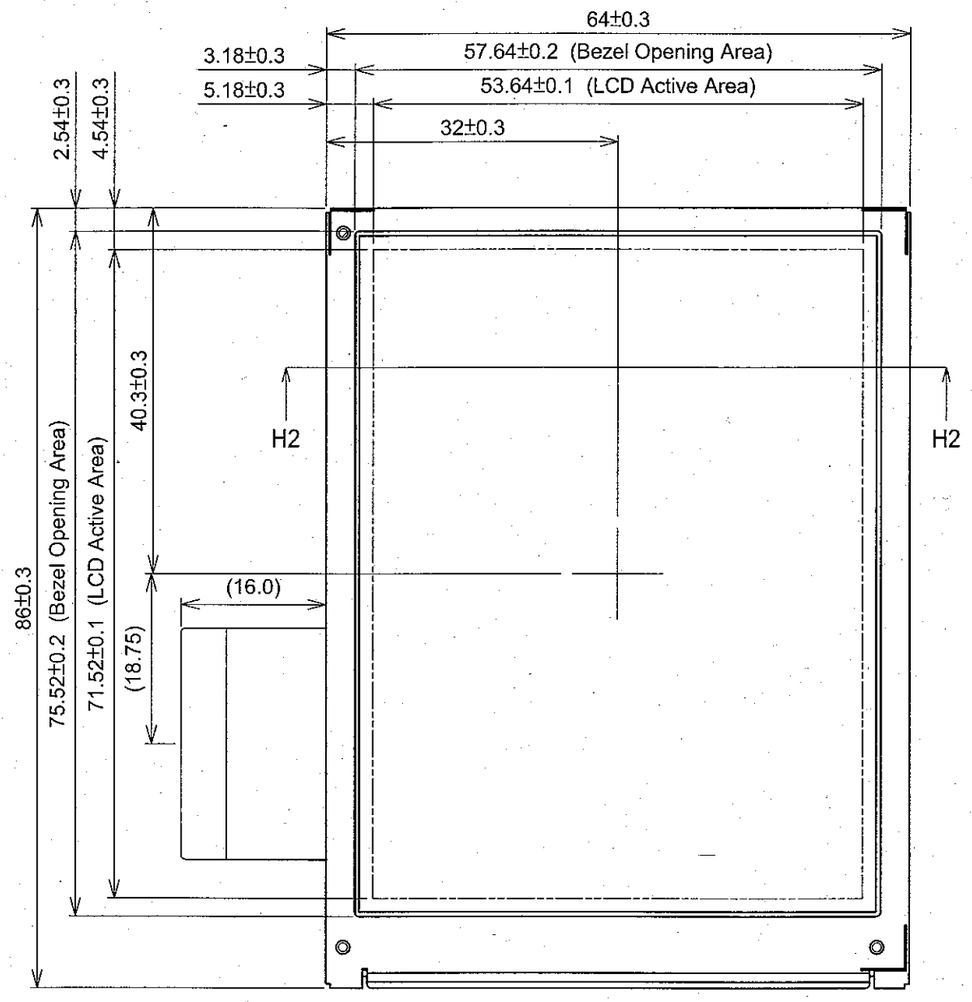

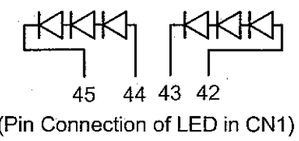

(Pin Connection of LED in CN1)

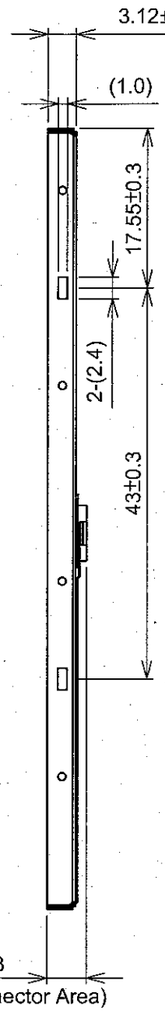

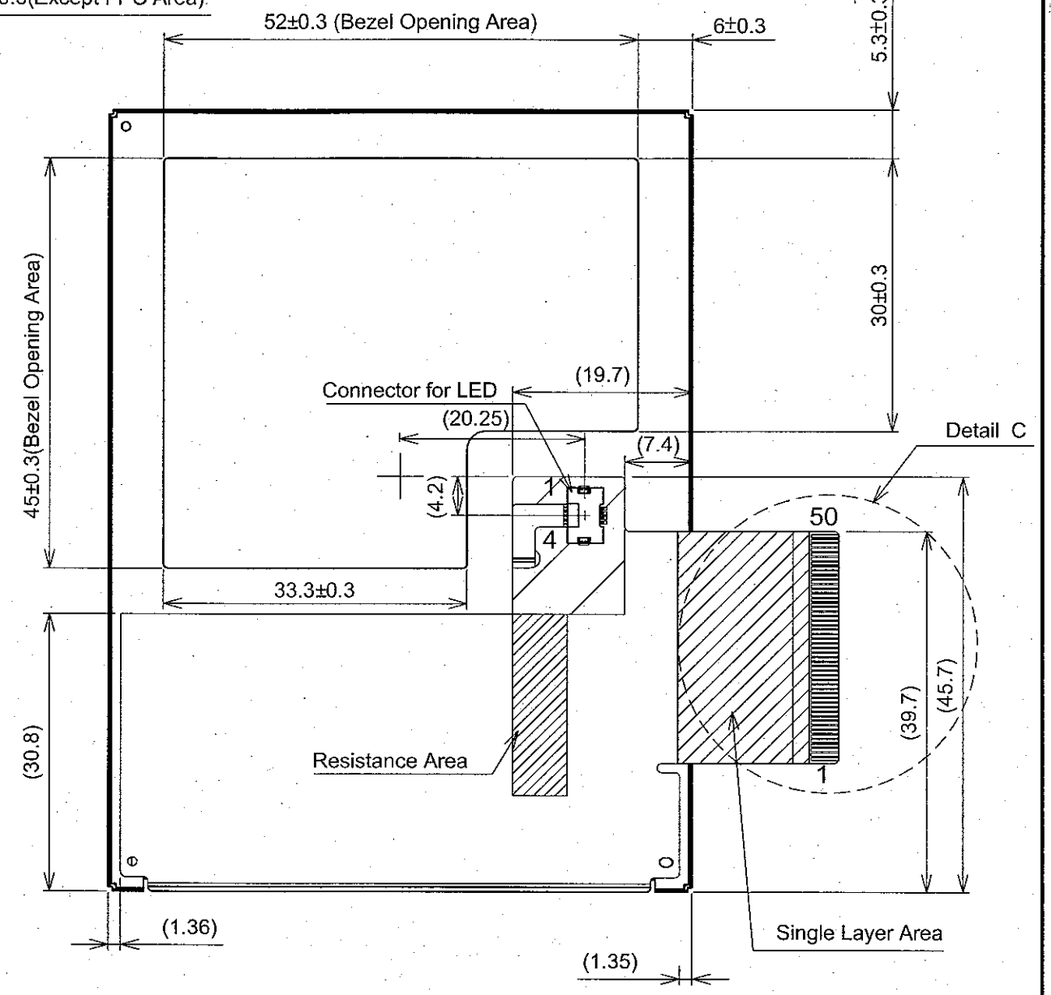

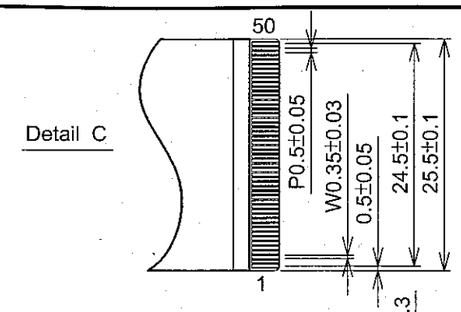

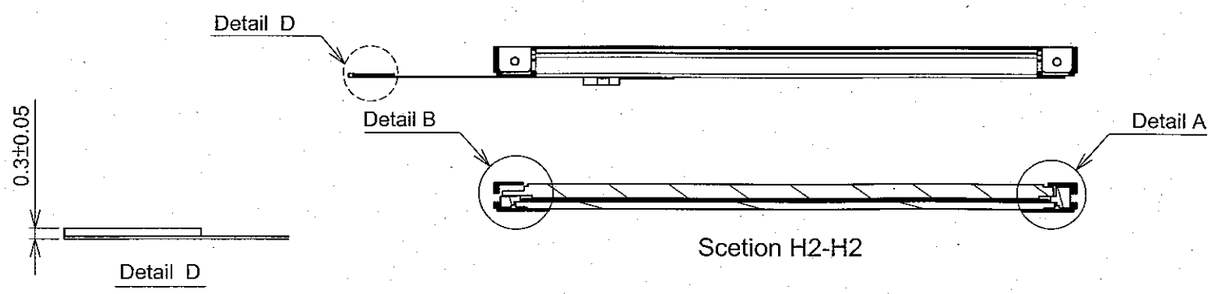

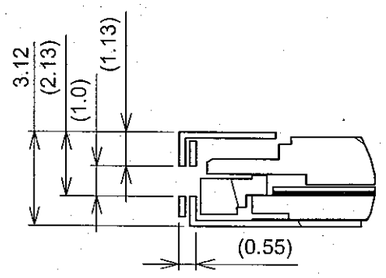

Detail B

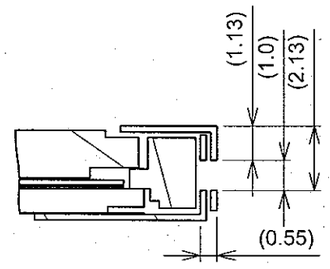

Detail A

Scale : NTS
Unit : mm

KAOHSIUNG HITACHI ELECTRONICS CO.,LTD.	DATE	May.13,'08	Sh. No.	7B63PS 2709-TX09D70VM1CBA-5	PAGE	9-1/1

10. APPEARANCE STANDARD

10.1 APPEARANCE INSPECTION CONDITION

Visual inspection should be done under the following condition.

(1) The inspection should be done in a dark room.(More than 1000(lx) and non-directive)
(2) The distance between eyes of an inspector and the LCD module is 30cm.
(3) The viewing zone is shown the figure.
Viewing angle≦25°

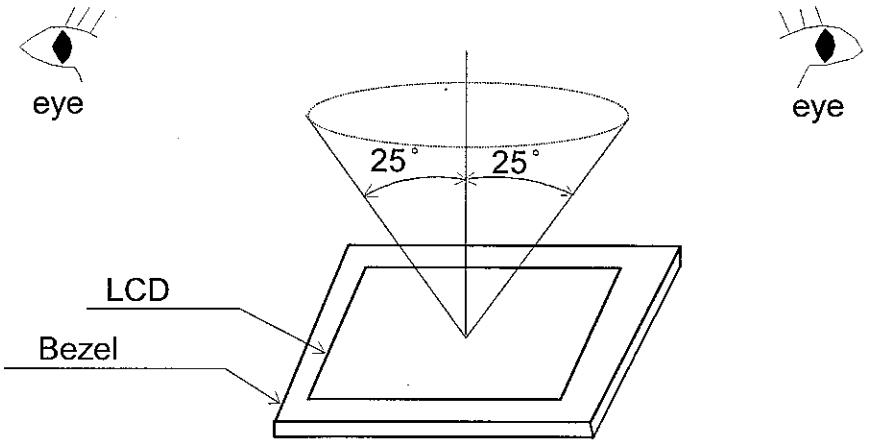

10.2 DEFINITION OF ZONE

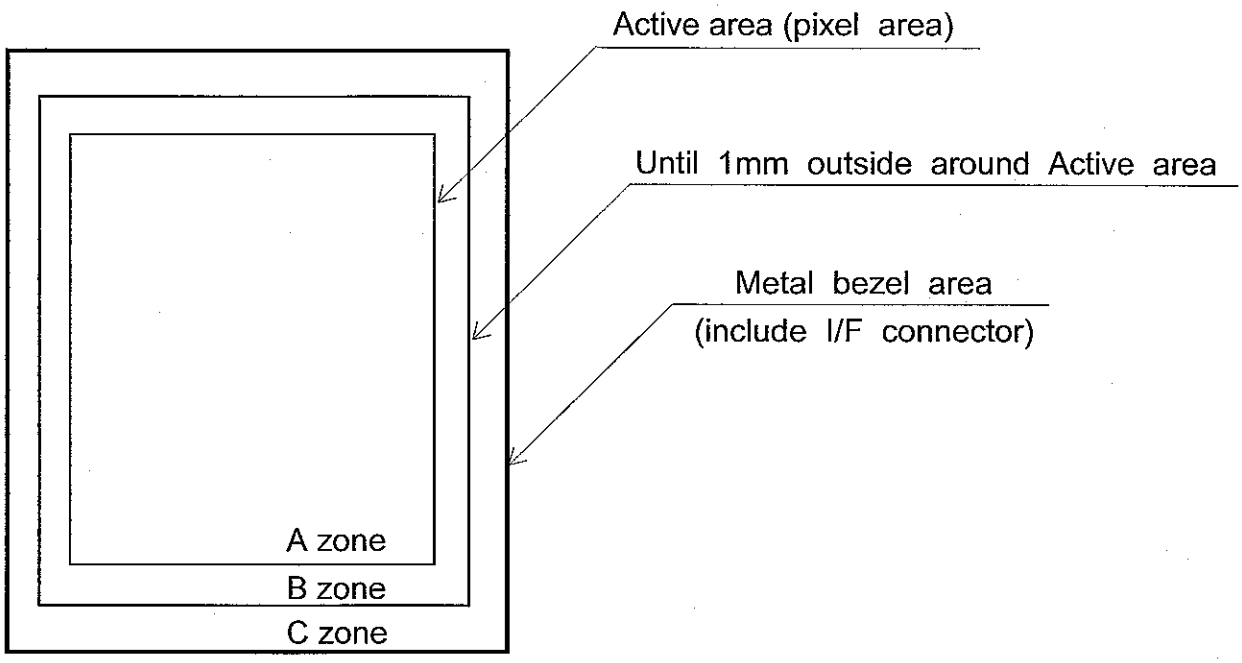

10.3 APPEARANCE SPECIFICATION

(1)LCD Appearance

*) If the problem related to this section occurs about this item , the responsible persons of both party (Customer and HITACHI) will discuss the matter in detail.

No.	ITEM	CRITERIA			APPLIED ZONE
LCD	Scratches	Length L(mm)	Width W(mm)	Maximum number acceptable	A,B
		L≦2.0	W≦0.03′	ignored	
		L≦2.0	0.03<W≦0.05	4	
		L>2.0	0.05<W	none	
	Dent	Distinguished one is acceptable (To be judged by HITACHI standard)			A
	Wrinkles in Polarizer	Same as above			A
	Bubbles	Average diameter D(mm)		Maximum number acceptable	A
		D≦0.3		2	
		0.3<D		none	
	Stains Foreign Materials	Filamentous (Line shape)			A,B
		Length L(mm)	Width W(mm)	Maximum number acceptable	
		L<2.0	W≦0.05	4	
	Dark spot	L≦1.0	0.05<W≦0.1	2	
		Round(Dot shape)			A,B
		Average diameter D(mm)		Maximum number acceptable	
		D≦0.15		6	
		0.15<D≦0.2		4	
		0.2<D		none	
		The total number		Filamentous + Round=9	
		Those wiped out easily are acceptable			
	Color Tone	To be judged by HITACHI STANDARD			A
	Color Uniformity	Same as above			A
	Dot Defect			Maximum number acceptable	A , B
		Sparkle mode	1 dot	4	
			2 dots	2(sets)	
			Total	4	
		Black mode	1 dot	4	
			2 dots	2(sets)	
			Total	4	
		Sparkle mode & Black mode	2 dots	2(sets)	
			Total	6	

Note 1 : Definition of average diameter (D)

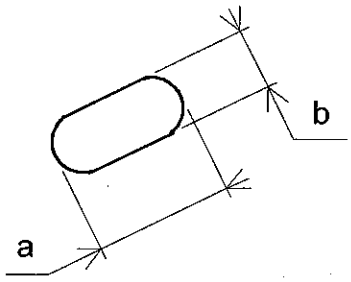

$$D = \frac{a+b}{2}$$

Note 2 : Definition of length (L) and width (W)

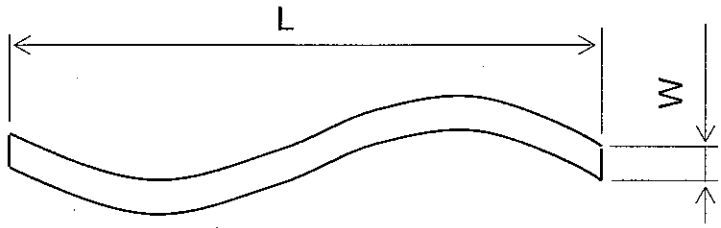

Note 3 : Definition of dot defect

(a) Dot Defect : Defect Area > 1/2 dot

(b) Sparkle mode : Brightness of dot is more than 30% at Black raster.

(c) Black mode : Brightness of dot is less than 70% at R.G.B raster.

(d) 1 dot : Defect dot is isolated , not attached to other defect dot.

(e) N dot : N defect dots are consecutive.

(N means the number of defect dots.)

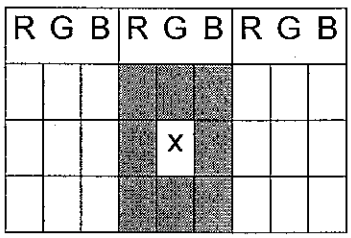

2 dots defect included defect dot "X" is defined as follows.

Adjacent dots to defect dot "X" :

(f) Counting definition of adjacent dots(1 sets) : same as 1 dot defect.

(g) Those wiped out easily are acceptable

11. PRECAUTION IN DESIGN

11.1 PRECAUTIONS AGAINST ELECTROSTATIC DISCHARGE

As this module contains C-MOS LSIs, it is not strong against electrostatic discharge. Make certain that the operator's body is connected to the ground through a list band , etc.
And don't touch I/F pins directly.

11.2 HANDLING PRECAUTIONS

(1) As the adhesives used for adhering upper/lower polarizer's and frame are made of organic substances which will be deteriorated by a chemical reaction with such chemicals as acetone, toluene, ethanol and isopropyl alcohol. The following are recommended for use :
normal hexane

Please contact with us when it is necessary for you to use chemicals other than the above.

(2) Lightly wipe to clean the dirty surface with absorbent cotton or other soft material like chamois, soaked in the recommended chemicals without scrubbing it hardly.
Always wipe the surface horizontally or vertically. Never give a wipe in a circle.
To prevent the display surface from damage and keep the appearance in good state, it is sufficient, in general, to wipe it with absorbent cotton.

(3) Immediately wipe off saliva or water drop attached on the display area because it may cause deformation or faded color.

(4) Fogy dew deposited on the surface may cause a damage, stain or dirt to the polarizer.
When you need to take out the LCD module from some place at low temperature for test, etc.
It is required to be warmed them up to temperature higher than room temperature before taking them out.

(5) Touching the display area or I/F pins with bare hands or contaminating them are prohibited, because the stain on the display area and poor insulation between terminals are often caused by being touched with bare hands.
(Some cosmetics are detrimental to polarizer's.)

(6) In general, the glass is fragile so that, especially on its periphery, tends to be cracked or chipped in handling. Please not give the LCD module sharp shocks by falling , etc.

(7) Maximum pressure to the surface must be less than 1.96×10^4 Pa.
And if the pressure area is less than $1cm^2$, maximum pressure must be less than 1.96N.

(8) Since the metal width is narrow on these locations (see page 9-1/1), please careful with handling.

(9) Top sheets shall be cleaned gently using a soft cloth such as those used for glasses.
Hard wiping accumulated dust will leave scars on the surface even using a cloth.

11.3 OPERATION PRECAUTION

(1) Using a LCM module beyond its maximum ratings may result in its permanent destruction.
LCM module's should usually be used under recommended operating conditions shown in chapter 5. Exceeding any of these conditions may adversely affect its reliability.

(2) Response time will be extremely delayed at lower temperature than the specified operating temperature range and on the other hand LCD's shows dark blue at higher temperature.
However those phenomena do not main defects of the LCD module. Those phenomena will disappear in the specified operating temperature range.

(3) If the display area is pushed hard during operation, some display patterns will be abnormally display.

(4) A slight dew depositing on terminals may cause electrochemical reaction which leads to terminal open circuit. Please operate the LCD module under the relative condition of 40℃ 85%RH.

11.4 STORAGE

In case of storing LCD module for a long period of time (for instance, for years) for the purpose of replacement use, the following precautions necessary.

(1) Store the LCD modules in a dark place; do not expose them to sunlight or ultraviolet rays.

(2) Keep the temperature between -30℃ and 80℃ at normal humidity.

(3) Store the LCD modules in the container which is used for shipping from us.

(4) No articles shall be left on the surface over an extended period of time.

12.DESIGNATION OF LOT MARK

12.1 LOT MARK

Lot mark is consisted of 4 dight for production lot 6 digits for production control..

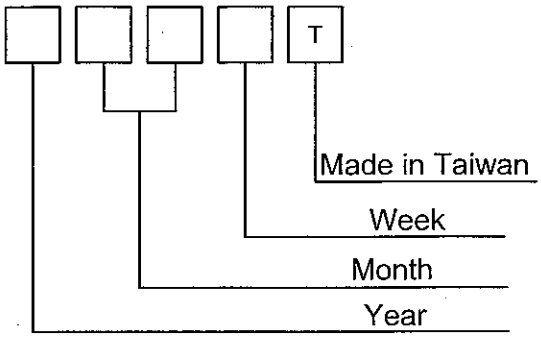

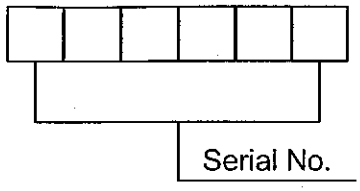

Year	Mark
2008	8
2009	9
2010	0
2011	1
2012	2

Month	Jan.	Feb.	Mar.	Apr.	May	Jun.
Mark	01	02	03	04	05	06
Month	Jul.	Aug.	Sep.	Oct.	Nov.	Dec.
Mark	07	08	09	10	11	12

Week (Day In Calendar)	Figure In Lot Mark
01~07	1
08~14	2
15~21	3
22~28	4
29~31	5

12.2 Location of lot mark : On the FPC

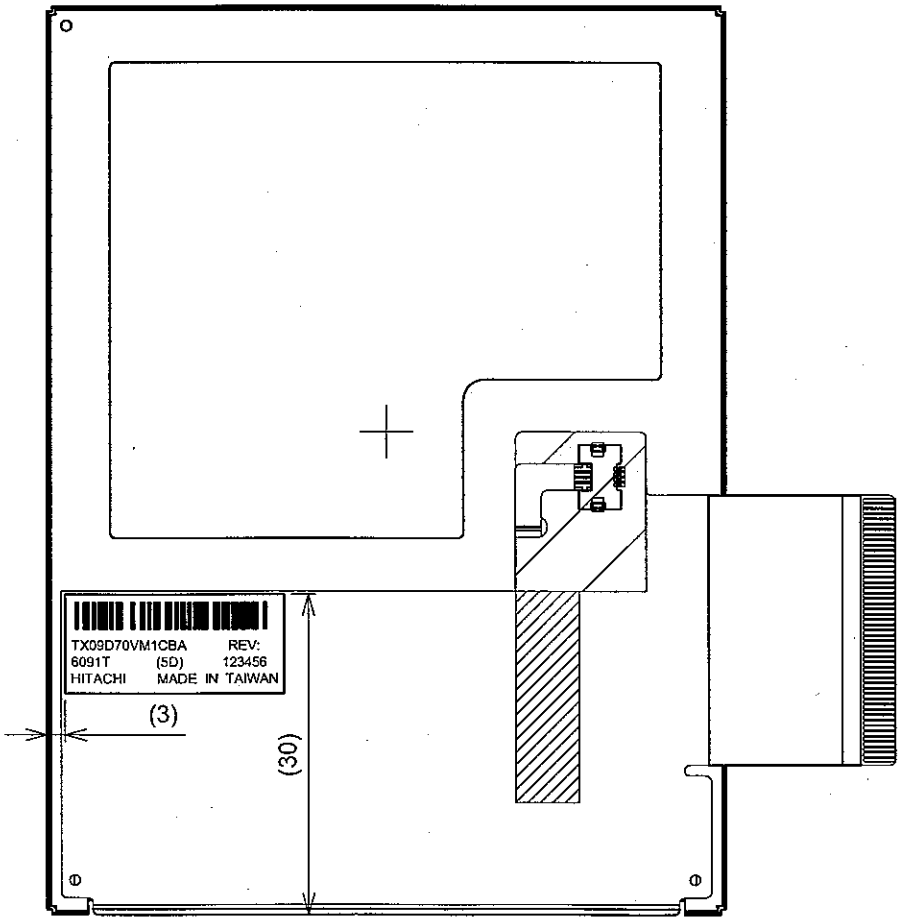

13. PRECAUTION FOR USE

(1) A limit sample should be provided by the both parities on an occasion when the both parties agree to its necessity.
Judgement by a limit sample shall take effect after the limit sample has been established and confirmed by the both parties.

(2) On the following occasions, the handling of the problem should be decided through discussion and agreement between responsible persons of the both parties.

1) When a question is arisen in the specifications.

2) When a new problem is arisen which is not specified in this specifications.

3) When an inspection specifications change or operating condition change by customer is reported to HITACHI, and some problem is arisen in the specification due to the change.

4) When a new problem is arisen at the customer's operating set for sample evaluation.

(3) Regarding the treatment for maintenance and repairing, both parties will discuss it in six months later after latest delivery of this product.

The precaution that should be observed when handling LCM have been explained above.
If any points are unclear or if you have any requests , please contact with HITACHI.