QG030-303/12

DC tangential blower

forward curved

ebm-papst St. Georgen GmbH & Co. KG
Hermann-Papst-Straße 1
74673 St. Georgen
Phone: +49 7724 81-0
Fax: +49 7724 81-1309
www.ebmpapst.com
info2@de.ebmpapst.com

Nominal data

Type	QG030-303/12	
Nominal voltage	[VDC]	12
Power input	[W]	8.7
Min. ambient temperature	[°C]	-20
Max. ambient temperature	[°C]	60
Air flow	[m³/h]	140
Sound pressure level	[dB(A)]	51

ml = max. load · me = max. efficiency · rfa = running at free air · cs = customer specs · cu = customer unit
Subject to alterations

DC tangential blower

forward curved

Technical features

General description	Cross flow fan with high air flow. Large outflow surface. Electronic commutation completely integrated.
Locked-rotor protection	Blocking and overload protection
Direction of protection	Right, looking at rotor
Bearing	Motor with ball bearing system. Impeller bracket with sliding bearings.
Lifetime L10 at 40 °C	30000 h
Lifetime L10 at maximum temperature	10000 h
Mass	0.380 kg
Housing material	Aluminum, housing side parts of plastic.
Material of impeller	Aluminum
Motor protection	Protected against reverse polarity and locking.
Approval	VDE, CSA, UL, CE

ebm-papst St. Georgen GmbH & Co. KG · Hermann-Papst-Straße 1 · 74673 St. Georgen · Phone: +49 7724 81-0 · Fax: +49 7724 81-1309 · www.ebmpapst.com · info2@de.ebmpapst.com

DC tangential blower

forward curved

Product drawing

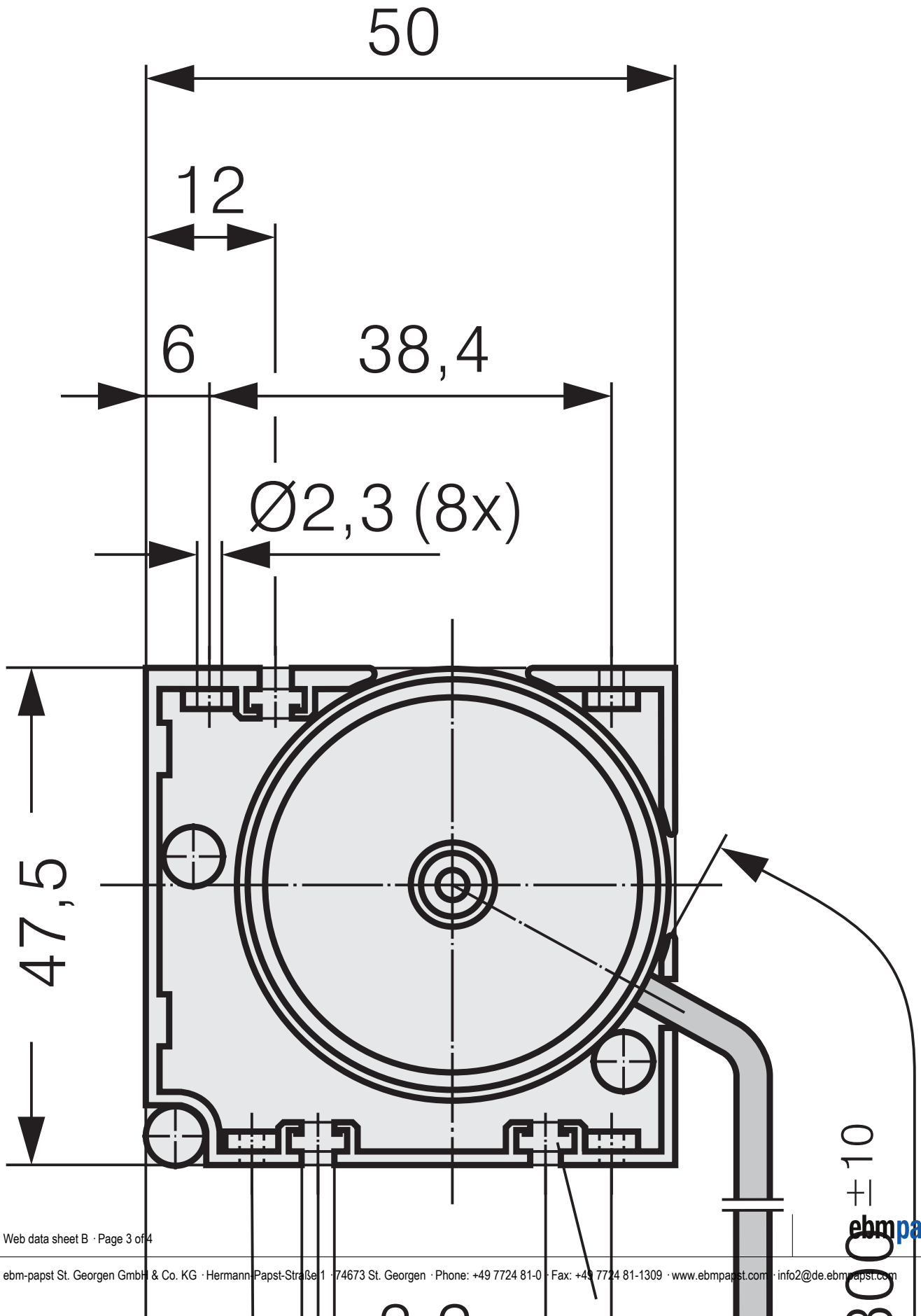

ebm-papst St. Georgen GmbH & Co. KG · Hermann-Papst-Straße 1 · 74673 St. Georgen · Phone: +49 7724 81-0 · Fax: +49 7724 81-1309 · www.ebmpapst.com · info2@de.ebmpapst.com

DC tangential blower

forward curved

Charts: Speed

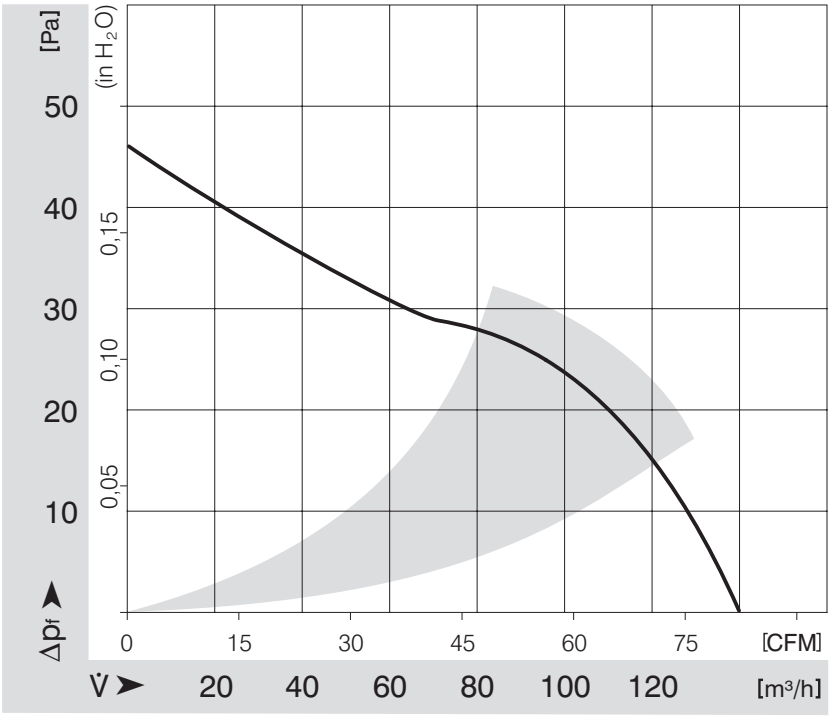

ebm-papst St. Georgen GmbH & Co. KG · Hermann-Papst-Straße 1 · 74673 St. Georgen · Phone: +49 7724 81-0 · Fax: +49 7724 81-1309 · www.ebmpapst.com · info2@de.ebmpapst.com