PRELIMINARY SPEC

Part Number: L-7701C4SURC-G

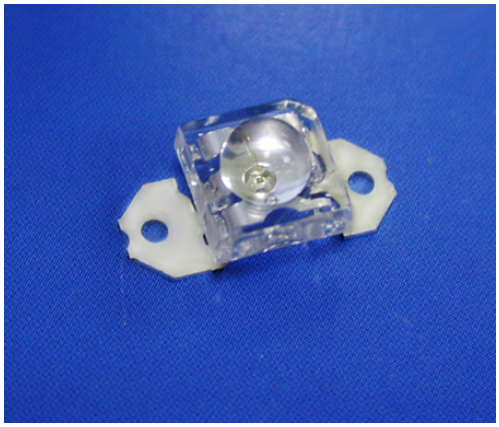

Technical Data

Features

* HIGH LUMINANCE OUTPUT.
* DESIGN FOR HIGH CURRENT OPERATION.
* SOLDERLESS MOUNTING TECHNIQUE.
* LOW POWER CONSUMPTION.
* LOW THERMAL RESISTANCE.
* LOW PROFILE.
* PACKAGED IN TUBES FOR USE WITH AUTOMATIC INSERTION EQUIPMENT.
* RoHS COMPLIANT.

Benefits

*Rugged Lighting Products.
*Electricity savings.
*Maintenance savings.
*Environmental Conformance.

Typical Applications

*Automotive Exterior Lighting.
*Solid State Lighting and Signaling.

Outline Drawings

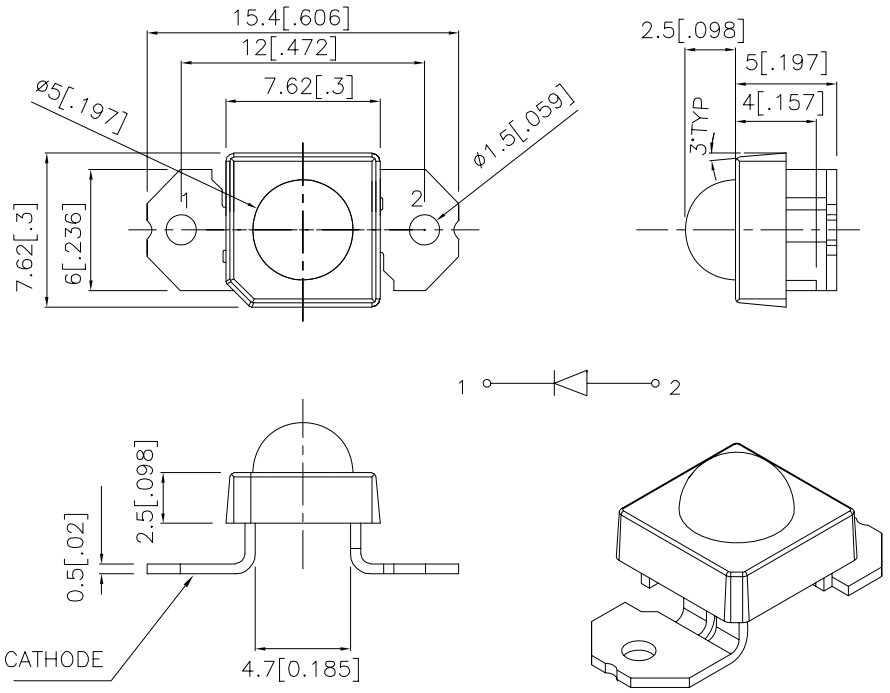

Notes:
1. All dimensions are in millimeters (inches).
2. Tolerance is ±0.25(0.01") unless otherwise noted.
3. Lead spacing is measured where the leads emerge from the package.
4. Specifications are subject to change without notice.

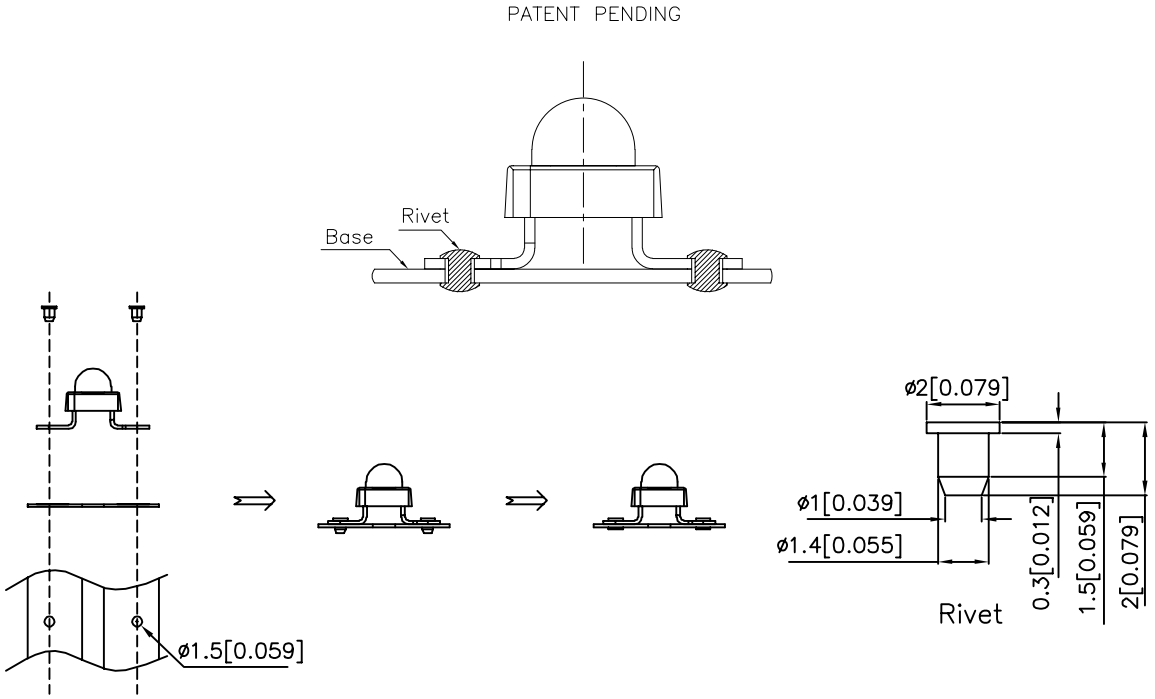

Absolute Maximum Ratings at TA=25°C

PARAMETER	SUR-G	UNITS
DC Forward Current	70	mA
Power dissipation	182	mW
Reverse Voltage	5	V
Operating Temperature	-40 To +85	˚C
Storage Temperature	-55 To +85	˚C

Selection Guide

Part No.	LED COLOR	Iv(mcd)[1] @70mA MIN.	TYP.	Viewing Angle[2] 2θ1/2 Typ.
L-7701C4SURC-G	HYPER RED (InGaAlP)	2800	4100	50°

Notes:
1.Luminous intensity is measured with an integrating sphere after the device has stabilized. Luminous Intensity/ Luminous Flux: +/-15%
2.θ1/2 is the angle from optical centerline where the luminous intensity is 1/2 the optical centerline value.

Optical Characteristics at TA=25°C
I_F=70mA $R_{\theta j\text{-}a}$=200°C/W

DEVICE TYPE	PEAK WAVELENGTH λPEAK (nm) TYP.	DOMINANT[1] WAVELENGTH λDOM (nm) TYP.	SPECTRAL LINE WAVELENGTH Δλ1/2(nm) TYP.
L-7701C4SURC-G	640	630	22

Note:
1.The dominant wavelength is derived from the CIE Chromaticity Diagram and represents the perceived color of the device. Wavelength: +/-1nm

Electrical Characteristics at TA=25°C

DEVICE TYPE	FORWARD VOLTAGE V_F(VOLTS)[1] @ I_F=70mA MIN.	TYP.	MAX.	REVERSE CURRENT I_R (uA) @ V_R=5V MAX.	CAPACITANCE C (pF) @ V_F=0V F=1MHZ TYP.	THERMAL RESISTANCE Rθj-pin °C/W TYP.
L-7701C4SURC-G	2.1	2.3	2.6	10	45	125

Note:
1. Forward Voltage: +/-0.1V.

Figures

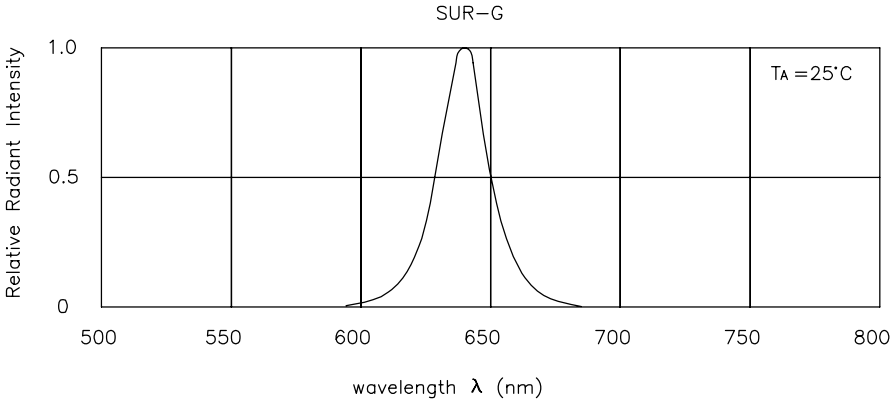

RELATIVE INTENSITY Vs. WAVELENGTH

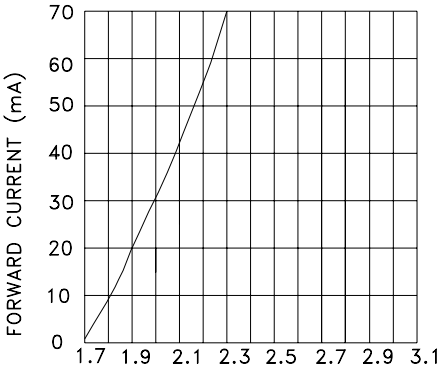

FORWARD CURRENT Vs.
FORWARD VOLTAGE

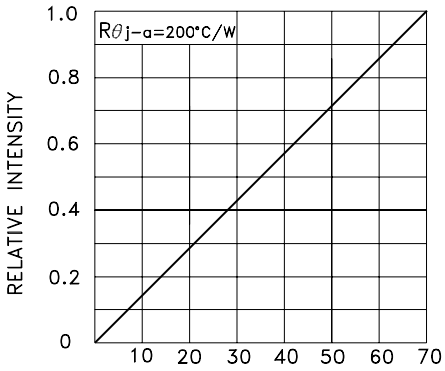

RELATIVE INTENSITY Vs.
FORWARD CURRENT

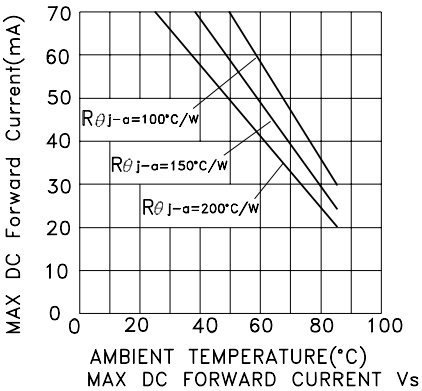

MAX DC FORWARD CURRENT Vs
AMBIENT TEMPERATURE

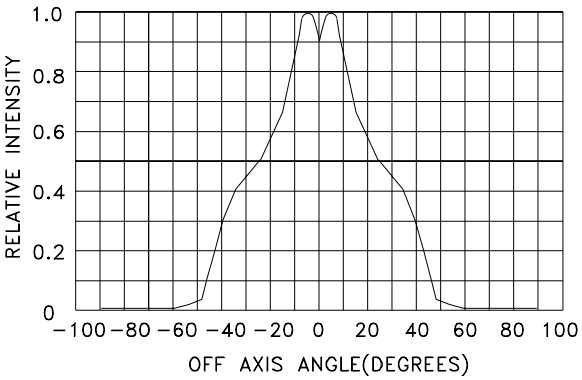

RELATIVE INTENSITY VS OFF AXIS ANGLE