National Semiconductor

July 31, 2008

LM3421, LM3423
N-Channel Controllers for Constant Current LED Drivers

General Description

The LM3421/LM3423 devices are versatile high voltage LED driver controllers. With the capability to be configured in a Buck, Boost, Buck-Boost (Flyback), or SEPIC topology, and an input operating voltage rating of 75V, these controllers are ideal for illuminating LEDs in a very diverse, large family of applications.

Adjustable high-side current sense with a typical sense voltage of 100mV allows for tight regulation of the LED current with the highest efficiency possible. Output LED current regulation is based on peak current-mode control with predictive Off-Time Control. This method of control eases the design of loop compensation while providing inherent input voltage feed-forward compensation.

The LM3421/LM3423 include a high-voltage startup regulator that operates over a wide input range of 4.5V to 75V. The internal PWM controller is designed for adjustable switching frequencies of up to 2.0MHz, thus enabling compact solutions. Additional features include: “zero” current shutdown, precision reference, logic compatible DIM input suitable for fast PWM dimming, cycle-by-cycle current limit, and thermal shutdown.

The LM3423 also includes an LED output status flag, a fault flag, a programmable fault timer, and a logic input to select the polarity of the dimming output driver.

Features

- V_{IN} range from 4.5V to 75V
- 2% Internal reference voltage (1.235V)
- Current sense voltage adjustable from 20mV
- High-side current sensing
- 2Ω MOSFET gate driver
- Dimming MOSFET gate driver
- Input under-voltage protection
- Over-voltage protection
- Low shutdown current, I_Q < 1µA
- Fast (50kHz) PWM dimming
- Cycle-by-cycle current limit
- Programmable switching frequency
- LED output status flag (LM3423 only)
- Fault timer pin (LM3423 only)
- TSSOP EP 16-lead package (LM3421)
- TSSOP EP 20-lead package (LM3423)

Applications

- LED Drivers
- Constant-Current Buck-Boost Regulator
- Constant-Current Boost Regulator
- Constant-Current Flyback Regulator
- Constant-Current SEPIC Regulator
- Thermo-Electric Cooler (Peltier) Driver

Typical Application Circuit

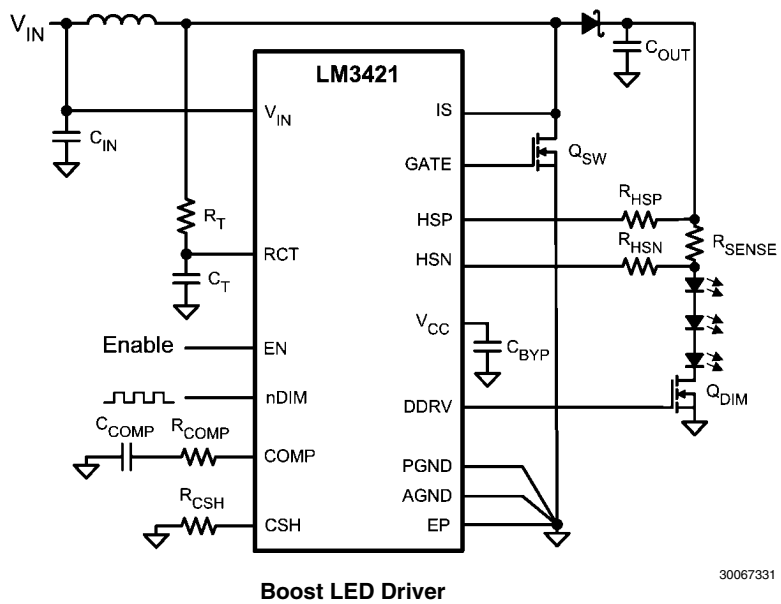

Boost LED Driver

© 2008 National Semiconductor Corporation

Connection Diagrams

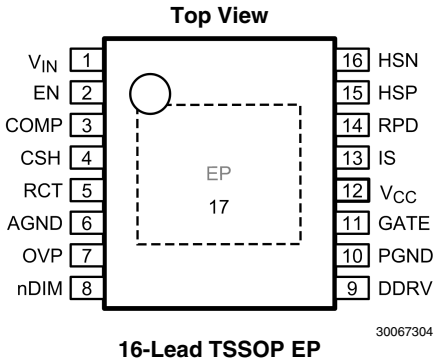

16-Lead TSSOP EP
NS Package Number MXA16A

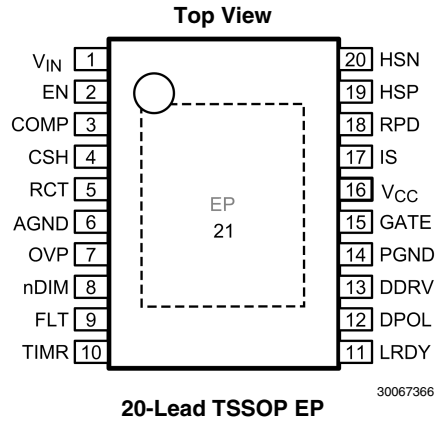

20-Lead TSSOP EP
NS Package Number MXA20A

Ordering Information

Order Number	Spec.	Package Type	NSC Package Drawing	Supplied As
LM3421MH	NOPB	TSSOP-16 EP	MXA16A	92 Units, Rail
LM3421MHX	NOPB	TSSOP-16 EP	MXA16A	2500 Units, Tape and Reel
LM3423MH	NOPB	TSSOP-20 EP	MXA20A	73 Units, Rail
LM3423MHX	NOPB	TSSOP-20 EP	MXA20A	2500 Units, Tape and Reel

Pin Descriptions

LM3423	LM3421	Name	Function
1	1	V_{IN}	Power supply input (4.5V-75V). Bypass with 100nF capacitor to AGND as close to the device as possible in the circuit board layout.
2	2	EN	Enable: Pull to ground for zero current shutdown. Tie directly to V_{IN} for automatic startup at 4.1V.
3	3	COMP	Compensation: PWM controller error amplifier compensation pin. This pin connects through a series resistor-capacitor network to AGND.
4	4	CSH	Current Sense High: Output of the high side sense amplifier and input to the main regulation loop error amplifier.
5	5	RCT	Resistor Capacitor Timing: External RC network sets the predictive “off-time” and thus the switching frequency. The RC network should be placed as close to the device as possible in the circuit board layout.
6	6	AGND	Analog Ground: The proper place to connect the compensation and timing capacitor returns. This pin should be connected via the circuit board to the PGND pin through the EP copper circuit board pad.
7	7	OVP	Over-Voltage Protection sense input: 1.24V threshold with hysteresis that is user programmable by the selection of the OVP Over-Voltage Lock-Out (OVLO) resistor divider network.
8	8	nDIM	Not DIM input: Dual function pin. Primarily used as the Pulse Width Modulation (PWM) input. When driven with a resistor divider from V_{IN}, this pin also functions as a user programmable V_{IN} Under-Voltage Lock-Out (UVLO) with 1.24V threshold and programmable hysteresis by the UVLO resistor divider network. The PWM and UVLO functions can be performed simultaneously.
9	-	FLT	Fault flag: This is an N-channel MOSFET open drain output. The FLT pin transitions to the high (open) state once the Fault Timer has timed out and latched the controller off.

LM3423	LM3421	Name	Function
10	-	TIMR	Fault Timer: The fault timer is comprised of an external capacitor, an internal charging current source, an internal discharge N-channel MOSFET, and a comparator that latches the fault condition when the threshold voltage (1.24V) is exceeded.
11	-	LRDY	LED Ready status flag: This is an N-channel MOSFET open drain output which pulls down whenever the LED current is not in regulation.
12	-	DPOL	Dim Polarity: Selects the polarity of the DIM driver output. Tie to V_{CC} or leave open for low side dimming, tie to ground for high side dimming.
13	9	DDRV	External Dimming MOSFET Gate Drive: Gate driver output responding to nDIM input.
14	10	PGND	Power Ground: GATE and DDRV gate drive ground current return pin. This pin should be connected via the circuit board to the AGND pin through the EP copper circuit board pad.
15	11	GATE	Main switching MOSFET gate drive output.
16	12	V_{CC}	Internal Regulator Bypass: 6.9V low dropout linear regulator output. Bypass with a 2.2µF–3.3µF, ceramic type capacitor to PGND.
17	13	IS	Main Switch Current Sense input: This pin is used for current mode control and cycle-by-cycle current limit. This pin can be tied to the drain of the main N-channel MOSFET switch for $R_{DS(ON)}$ sensing or tied to a sense resistor installed in the source of the same device.
18	14	RPD	Resistor Pull-Down: This is an open drain N-channel MOSFET which is used to pull-down the low side of all external resistor dividers (V_{IN} UVLO, OVP). This pin allows for system “zero-current” shutdown.
19	15	HSP	High Side Sense Positive: LED current sense positive input. An external resistor sets a reference current flowing into this pin from the programmed high-side sense voltage. Although the current into this pin can be set to values ranging from 10µA through 1mA, a value of 100µA is recommended. This pin is a virtual ground whose potential is set by the voltage on the HSN pin.
20	16	HSN	High Side Sense Negative: This pin sets the reference voltage for the HSP input. An external resistor of the same value as that used on the HSP pin should be connected from this pin to the negative side of the current sense resistor.
EP (21)	EP (17)	EP	EP: Star ground, connecting AGND and PGND. For thermal considerations please refer to (Note 4) of the Electrical Characteristics table.

Absolute Maximum Ratings (Notes 1, 2)

If Military/Aerospace specified devices are required, please contact the National Semiconductor Sales Office/ Distributors for availability and specifications.

V_{IN}, EN, RPD, nDIM	-0.3V to 76.0V -1mA continuous
OVP, HSP, HSN, LRDY, FLT, DPOL	-0.3V to 76.0V -100µA continuous
RCT	-0.3V to 76.0V -1mA to +5mA continuous
IS	-0.3V to 76.0V -2V for 100ns -1mA continuous
V_{CC}	-0.3V to 8.0V
TIMR	-0.3V to 7.0V -100µA to +100µA Continuous
COMP, CSH	-0.3V to 6.0V -200µA to +200µA Continuous
GATE, DDRV	-0.3V to V_{CC} -2.5V for 100ns V_{CC}+2.5V for 100ns -1mA to +1mA continuous
PGND	-0.3V to 0.3V -2.5V to 2.5V for 100ns
Maximum Junction Temperature (Internally Limited)	165°C
Storage Temperature Range	–65°C to +150°C
Maximum Lead Temperature (Soldering) (Note 5)	300°C
Continuous Power Dissipation (Notes , 4)	Internally Limited
ESD Susceptibility (Note 6)	
Human Body Model	2kV
Machine Model	200V
Charge Device Model	500V

Operating Conditions (Notes 1, 2)

Operating Junction Temperature Range (Note 7)	–40°C to +150°C
Input Voltage V_{IN}	4.5V to 75V

Electrical Characteristics (Note 2)

Specifications in standard type face are for T_J = 25°C and those with **boldface type** apply over the full **Operating Temperature Range** (T_J = –40°C to +125°C). Minimum and Maximum limits are guaranteed through test, design, or statistical correlation. Typical values represent the most likely parametric norm at T_J = +25°C, and are provided for reference purposes only. Unless otherwise stated the following condition applies: V_{IN} = +14V.

Symbol	Parameter	Conditions	**Min**(Note 7)	**Typ**(Note 8)	**Max**(Note 7)	Units
STARTUP REGULATOR						
V_{CCREG}	V_{CC} Regulation	I_{CC} = 0mA	**6.30**	6.90	**7.35**	V
I_{CCLIM}	V_{CC} Current Limit	V_{CC} = 0V	**20**	25		mA
I_Q	Quiescent Current	EN = 3.0V, Static		2	**3**	mA
I_{SD}	Shutdown Current	EN = 0V		0.1	1.0	µA
V_{CC} SUPPLY						
V_{CCUV}	V_{CC} UVLO Threshold	V_{CC} Increasing		4.17	**4.50**	V
		V_{CC} Decreasing	**3.70**	4.08		V
V_{CCHYS}	V_{CC} UVLO Hysteresis			0.1		V
EN THRESHOLDS						
EN_{ST}	EN Startup Threshold	EN Increasing		1.75	**2.40**	V
		EN Decreasing	**0.80**	1.63		V
EN_{STHYS}	EN Startup Hysteresis			0.1		V
R_{EN}	EN Pulldown Resistance	EN = 1V	**0.45**	0.82	**1.30**	MΩ
CSH THRESHOLDS						
	CSH High Fault	CSH Increasing		1.6		V
	CSH Low Condition on LRDY Pin (LM3423 only)	CSH increasing		1.0		V
OV THRESHOLDS						
OVP_{CB}	OVP OVLO Threshold	OVP Increasing	**1.185**	1.240	**1.285**	V
OVP_{HYS}	OVP Hysteresis Source Current	OVP Active (high)	**20**	23	**25**	µA
DPOL THRESHOLDS						
$DPOL_{THRESH}$	DPOL Logic Threshold	DPOL Increasing	**2.0**	2.3	**2.6**	V

Symbol	Parameter	Conditions	**Min**(Note 7)	**Typ**(Note 8)	**Max**(Note 7)	Units
R_{DPOL}	DPOL Pullup Resistance			500	**1200**	KΩ
FAULT TIMER						
V_{FLTTH}	Fault Threshold		**1.185**	1.240	**1.285**	V
I_{FLT}	Fault Pin Source Current		**10**	11.5	**13**	µA
ERROR AMPLIFIER						
V_{REF}	CSH Reference Voltage	With Respect to AGND	**1.210**	1.235	**1.260**	V
	Error Amplifier Input Bias Current		-0.6	0	0.6	µA
	COMP Sink / Source Current		**22**	30	**35**	
	Transconductance			100		µA/V
	Linear Input Range	(Note 9)		±125		mV
	Transconductance Bandwidth (Note 9)	-6dB Unloaded Response	0.5	1.0		MHz
OFF TIMER						
	Minimum Off-time	RCT = 1V through 1kΩ		35	**75**	ns
R_{RCT}	RCT Reset Pull-down Resistance			36	**120**	Ω
V_{RCT}	V_{IN}/25 Reference Voltage	V_{IN} = 14V	**540**	565	**585**	mV
f	Continuous Conduction Switching Frequency	2.2nF > C_T > 470pF		$25/(C_T R_T)$		Hz
PWM COMPARATOR						
	COMP to PWM Offset		**700**	800	**900**	mV
CURRENT LIMIT (IS)						
I_{LIM}	Current Limit Threshold		**200**	245	**300**	mV
	I_{LIM} Delay to Output			35	**75**	ns
	Leading Edge Blanking Time		**115**	210	**325**	
HIGH SIDE TRANSCONDUCTANCE AMPLIFIER						
	Input Bias Current			11.5		µA
	Transconductance		**20**	119		mA/V
	Input Offset Current		**-1.5**	0	**1.5**	µA
	Input Offset Voltage		**-7**	0	**7**	mV
	Transconductance Bandwidth (Note 9)	I_{CSH} = 100µA	250	500		kHz
GATE DRIVER (GATE)						
$R_{SRC(GATE)}$	GATE Sourcing Resistance	GATE = High		2.0	**6.0**	Ω
$R_{SNK(GATE)}$	GATE Sinking Resistance	GATE = Low		1.3	**4.5**	
DIM DRIVER (DIM, DDRV)						
$nDIM_{VTH}$	nDIM / UVLO Threshold		**1.185**	1.240	**1.285**	V
$nDIM_{HYS}$	nDIM Hysteresis Current		**20**	23	**25**	µA
$R_{SRC(DDRV)}$	DDRV Sourcing Resistance	DDRV = High		13.5	**30.0**	Ω
$R_{SNK(DDRV)}$	DDRV Sinking Resistance	DDRV = Low		3.5	**10.0**	
PULL-DOWN N-CHANNEL MOSFETS						
R_{RPD}	RPD Pull-down Resistance			145	**300**	Ω
R_{FLT}	FLT Pull-down Resistance			145	**300**	
R_{LRDY}	LRDY Pull-down Resistance			135	**300**	
THERMAL SHUTDOWN						
T_{SD}	Thermal Shutdown Threshold			165		°C
T_{HYS}	Thermal Shutdown Hysteresis			25		
THERMAL RESISTANCE						

Symbol	Parameter	Conditions	**Min**(Note 7)	**Typ**(Note 8)	**Max**(Note 7)	Units
θ_{JA}	Junction to Ambient (Note 4)	16L TSSOP EP		37.4		°C/W
		20L TSSOP EP		34.0		
θ_{JC}	Junction to Exposed Pad (EP)	16L TSSOP EP		2.3		°C/W
		20L TSSOP EP		2.3		

Note 1: Absolute maximum ratings are limits beyond which damage to the device may occur. Operating Ratings are conditions for which the device is intended to be functional, but device parameter specifications may not be guaranteed. For guaranteed specifications and test conditions, see the Electrical Characteristics.

Note 2: All voltages are with respect to the potential at the AGND pin, unless otherwise specified.

Note 3: Internal thermal shutdown circuitry protects the device from permanent damage. Thermal shutdown engages at T_J=165°C (typical) and disengages at T_J=140°C (typical).

Note 4: Junction-to-ambient thermal resistance is highly board-layout dependent. The numbers listed in the table are given for an reference layout wherein the 16L TSSOP package has its EP pad populated with 9 vias and the 20L TSSOP has its EP pad populated with 12 vias. In applications where high maximum power dissipation exists, namely driving a large MOSFET at high switching frequency from a high input voltage, special care must be paid to thermal dissipation issues during board design. In high-power dissipation applications, the maximum ambient temperature may have to be derated. Maximum ambient temperature (T_{A-MAX}) is dependent on the maximum operating junction temperature ($T_{J-MAX-OP}$ = 125°C), the maximum power dissipation of the device in the application (P_{D-MAX}), and the junction-to ambient thermal resistance of the package in the application (θ_{JA}), as given by the following equation: $T_{A-MAX} = T_{J-MAX-OP} - (\theta_{JA} \times P_{D-MAX})$. In most applications there is little need for the full power dissipation capability of this advanced package. Under these circumstances, no vias would be required and the thermal resistances would be 104 °C/W for the 16L TSSOP and 86.7 °C/W for the 20L TSSOP. It is possible to conservatively interpolate between the full via count thermal resistance and the no via count thermal resistance with a straight line to get a thermal resistance for any number of vias in between these two limits.

Note 5: Refer to National's packaging website for more detailed information and mounting techniques. http://www.national.com/packaging/

Note 6: Human Body Model, applicable std. JESD22-A114-C. Machine Model, applicable std. JESD22-A115-A. Field Induced Charge Device Model, applicable std. JESD22-C101-C.

Note 7: All limits guaranteed at room temperature (standard typeface) and at temperature extremes (bold typeface). All room temperature limits are 100% production tested. All limits at temperature extremes are guaranteed via correlation using standard Statistical Quality Control (SQC) methods. All limits are used to calculate Average Outgoing Quality Level (AOQL).

Note 8: Typical numbers are at 25°C and represent the most likely norm.

Note 9: These electrical parameters are guaranteed by design, and are not verified by test.

Typical Performance Characteristics

Taken from the standard evaluation board

Boost Efficiency vs. Input Voltage (6 White LEDs, ~20V at 1A)

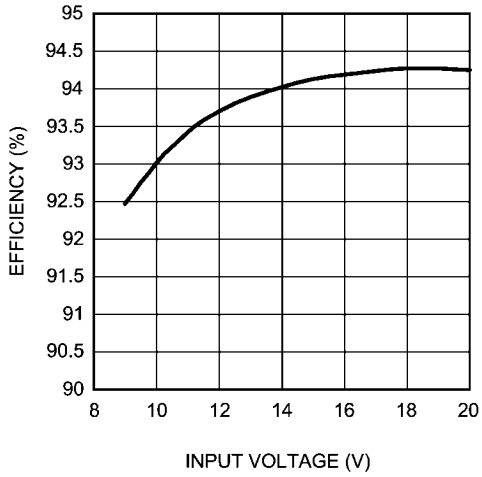

30067323

Buck/Boost Efficiency vs. Input Voltage (6 White LEDs, ~20V at 1A)

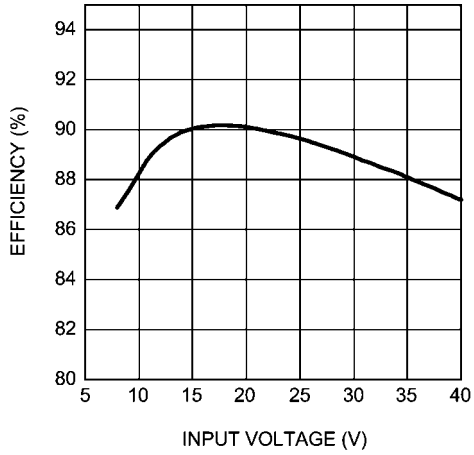

30067322

Boost Efficiency vs. Input Voltage (11 White LEDs, ~46V at 1A)

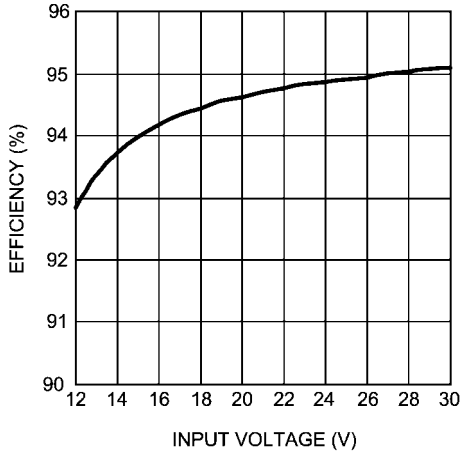

30067321

Average LED Current vs. PWM DIM Duty Cycle (V_{IN} = 12V, 6 White LEDs, ~20V at 1A)

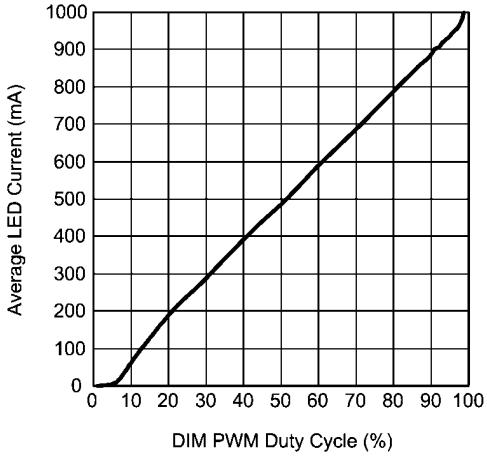

30067318

LED Current vs. Ambient Temperature (V_{IN} = 12V, Nominal LED Current Set at 1A)

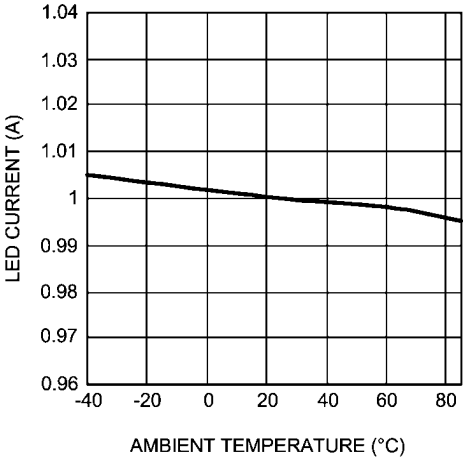

30067319

LED Current vs. Input Voltage (Boost, 6 White LEDs, ~20V at 1A)

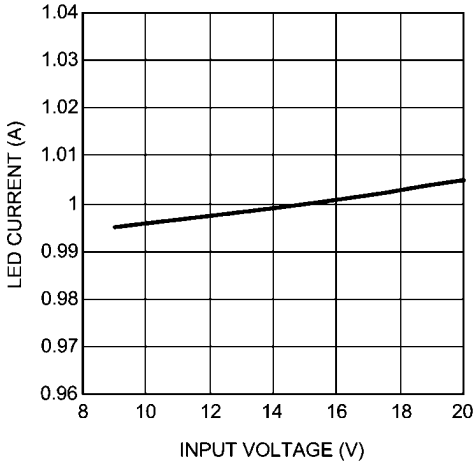

30067324

30kHz PWM Dimming (95% Duty Cycle ON)

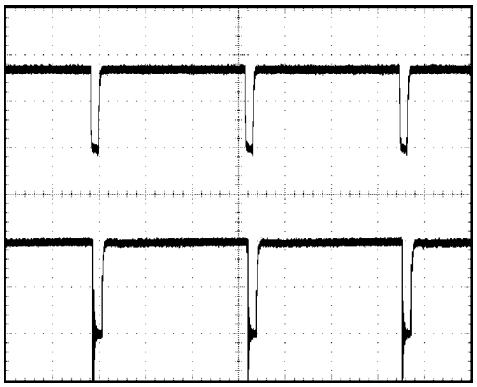

30067369

I_{LED} = 1A nominal, V_{IN} = 12V, $V_{LED(s)}$ = 20V
Top trace: nDIM input, 2V/div, DC
Bottom trace: I_{LED}, 500mA/div, DC
T = 10µs/div

30kHz PWM Dimming (10% Duty Cycle ON)

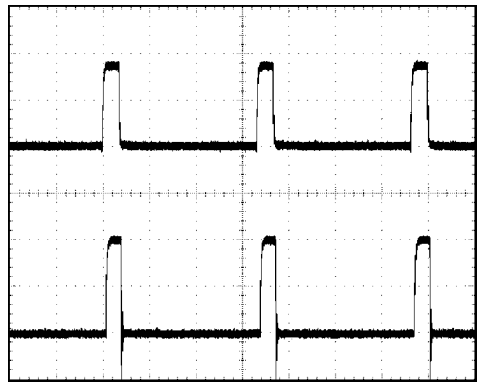

30067370

I_{LED} = 1A nominal, V_{IN} = 12V, $V_{LED(s)}$ = 20V
Top trace: nDIM input, 2V/div, DC
Bottom trace: I_{LED}, 500mA/div, DC
T = 10µs/div

30kHz PWM Dimming (5% Duty Cycle ON)

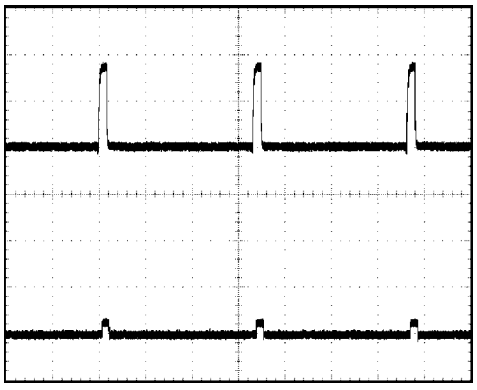

30067371

I_{LED} = 1A nominal, V_{IN} = 12V, $V_{LED(s)}$ = 20V
Top trace: nDIM input, 2V/div, DC
Bottom trace: I_{LED}, 500mA/div, DC
T = 10µs/div

As shown in the *Average LED Current vs. PWM DIM Duty Cycle* curve the current drops at very low duty cycle. This is due to the fact that the switcher is shut off during the LED off time. At low duty cycle the choke does not have time to get the current up to the control setpoint. This can be looked on as an advantage in that it allows a wider PWM control range, albeit not linear under about 7.5% duty cycle (this transition point can be set over a limited range by component value selection).

Block Diagram

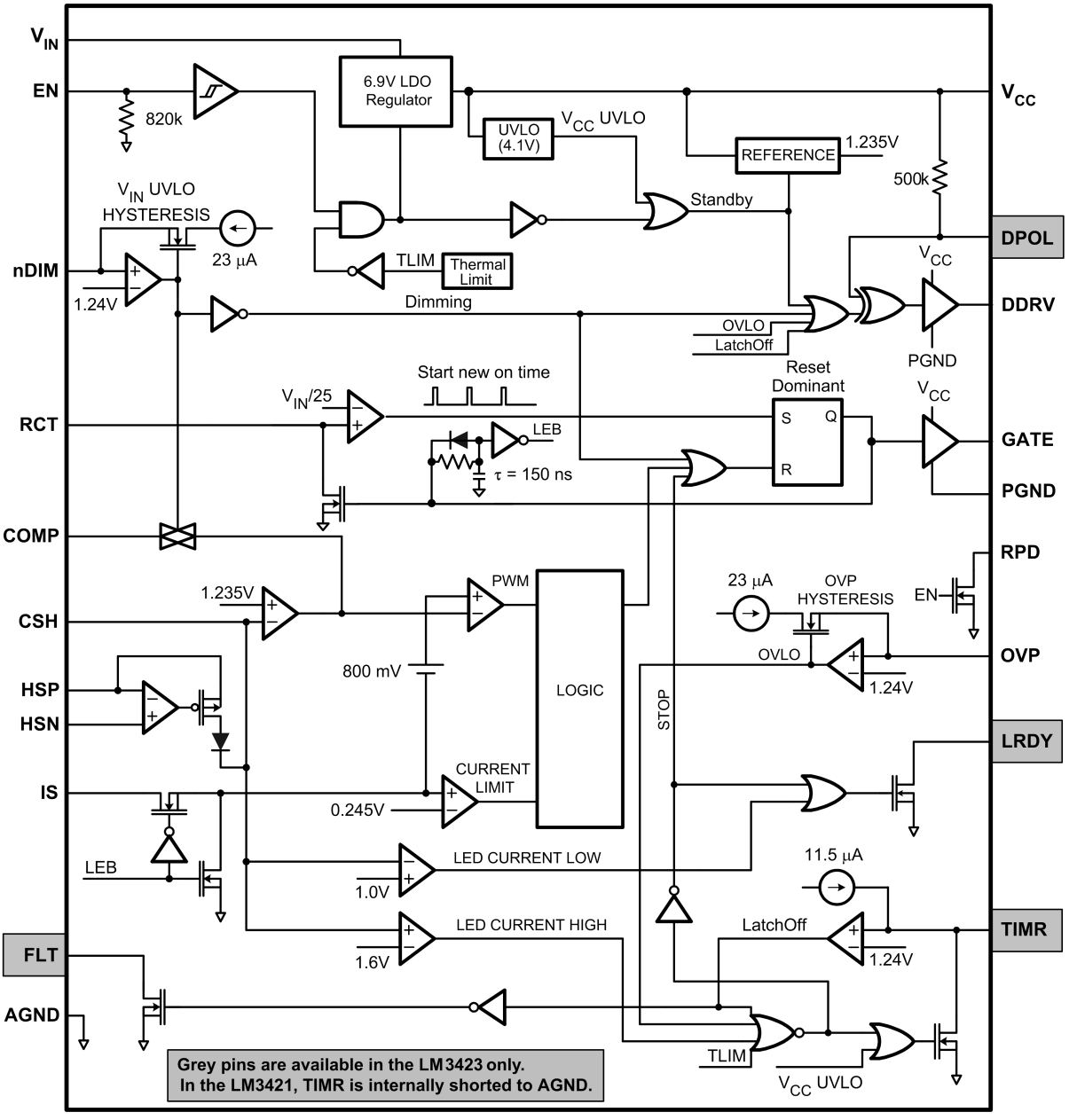

Functional Description

ENABLE

The LM3421/LM3423 devices impliment "zero-current" shutdown via the EN and RPD pins. When pulled low, the EN pin places the devices into a near-zero current draw state in which only leakage currents will be observed flowing into the pins of the LM3421/LM3423.

The RPD pin connects to an open drain N-channel MOSFET that is only enabled when the device is enabled. Tying the bottom resistor of external resistor dividers, namely V_{IN} Under-Voltage Lock-Out (UVLO) and Over-Voltage Lock-Out (OVLO), allows them to float during shutdown, thus removing their current paths. In this way, the LED module can be designed to draw zero current from the V_{IN} input supply line when disabled. All other internal pin functions are also disabled and draw zero current.

The EN pin should be tied to V_{IN} if the low current disable function is not desired. This pin, being a micro-power enable, is not a precision comparator input and is not appropriate for implementing UVLO. The nDIM pin may be used for an accurate V_{IN} UVLO function, as discussed in detail below in the section titled *External Under-Voltage Protection*.

STARTUP REGULATOR (V_{CC} LDO)

The LM3421/LM3423 devices include a high voltage, low dropout (LDO) bias regulator. When power is applied and the EN pin is high, the regulator is enabled and sources current into an external capacitor connected to the V_{CC} pin. The output voltage is 6.9V nominally and the supply is internally current limited to 20mA minimum. The recommended bypass capacitance range for the V_{CC} regulator is 2.2µF to 3.3µF.

The output of the V_{CC} regulator is monitored by an internal UVLO circuit. The purpose of V_{CC} UVLO is to protect the device during startup, normal operation, and shutdown from attempting to operate with insufficient supply voltage. During startup, the V_{CC} UVLO circuitry ensures that the device does not begin switching until the V_{CC} voltage exceeds the upper threshold in the hysteretic band of the V_{CC} UVLO threshold. When V_{IN} is low, the low dropout regulator will drive V_{CC} to within several hundred millivolts of V_{IN}. If during normal operation V_{CC} falls below the V_{CC} UVLO threshold for any reason, the V_{CC} UVLO circuitry will disable the device. In this case, the device will not resume operation until the V_{CC} UVLO release threshold voltage is exceeded. On-chip filtering prevents intermittent transient dips that are common in high speed switching regulators from triggering V_{CC} UVLO.

EXTERNAL UNDER-VOLTAGE PROTECTION

The nDIM pin is a dual-function input that features an accurate 1.24V threshold with programmable hysteresis. This pin functions as both the PWM input for fast dimming of the LEDs and as a V_{IN} UVLO. When the pin voltage rises and exceeds the 1.24V threshold, 23µA (typical) of current is driven out of the nDIM pin into the resistor divider providing programmable hysteresis. To calculate the amount of V_{IN} hysteresis achieved, simply multiply the top resistor in the divider (R1 in *Figure 1*) by 23µA (for a two resistor system) or the Thevenin resistance by 23µA for any other network. Note that if the Thevenin resistance is used in the calculation the result is the amount of voltage hysteresis observed at the nDIM pin. This quantity must be gained up by the appropriate resistor divider attenuation factor to calculate the actual V_{IN} hysteresis observed.

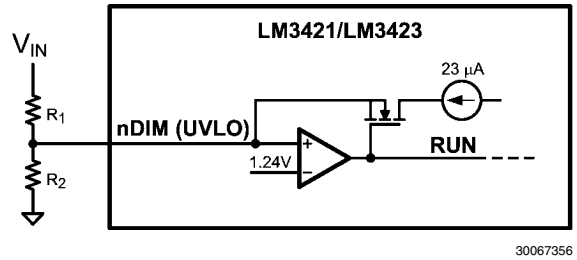

FIGURE 1. Under-Voltage Lock-Out Circuitry

Cycling the EN Pin Causes Escape from UVLO

When the EN and RPD pins are used together to implement the "zero-current" shutdown function, they allow the resistor divider (R1 and R2) on the nDIM to pull the pin up to V_{IN}. This will appear as a legal operating voltage (nDIM > 1.24V). This condition is removed as soon as the EN pin is taken back to a high state. If the input voltage is inside the UVLO threshold hysteretic window and the controller is off, cycling the EN pin low and then high will start the controller even though the UVLO turn-on threshold has not been reached.

PROGRAMMING AVERAGE LED CURRENT

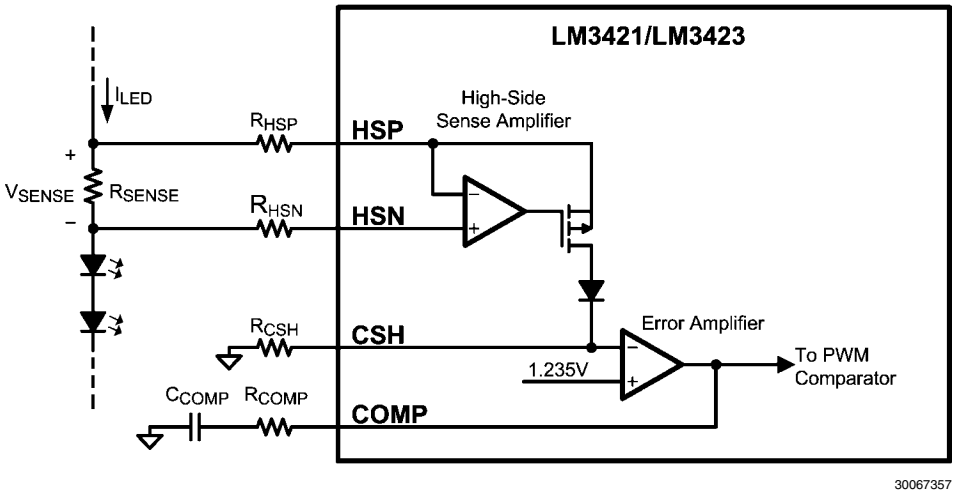

FIGURE 2. LED Current Sense Circuitry

This section serves to explain how the LM3421/LM3423 controllers use the high-side sense amplifier to regulate average LED current. Instructions for calculation of component values are also covered.

The voltage at the CSH pin is regulated by the error amplifier to be 1.235V. Understanding how average LED current is regulated requires understanding the relationship between the CSH voltage (V_{CSH}) and the sense voltage (V_{SENSE}). This is because V_{SENSE} and R_{SENSE} directly set the average LED current, I_{LED}.

The high side amplifier in *Figure 2* forces its input terminals to equal potential. Because of this, the V_{SENSE} voltage is forced across the differential voltages across R_{HSP} and R_{HSN}. In other words, the amplifier's output P-MOSFET transistor pulls current through R_{HSP} until $V_{HSP}=V_{HSN}$, and this occurs when the voltage ($|V_{RHSP}|$ - $|V_{RHSN}|$) is equal to V_{SENSE}. So the current flowing down to the CSH pin is given by:

$$I_{CSH} = \frac{V_{SENSE}}{R_{HSP}}$$

And the voltage at the CSH pin is then given by:

$$V_{CSH} = I_{CSH} \times R_{CSH} = V_{SENSE} \times \frac{R_{CSH}}{R_{HSP}}$$

So, the CSH voltage is the sense voltage (V_{SENSE}) gained up by the ratio of R_{CSH} to R_{HSP}. As stated previously, the control system's error amplifier regulates the CSH voltage (V_{CSH}) to V_{REF}. So, using the above equation with some slight substitution and rearranging, we can conclude the following:

$$V_{SENSE} = V_{REF} \times \frac{R_{HSP}}{R_{CSH}}$$

This leads to the final equation that can be used to calculate average LED current given any combination of resistor values:

$$I_{LED} = \frac{V_{SENSE}}{R_{SENSE}} = \frac{V_{REF}}{R_{SENSE}} \times \frac{R_{HSP}}{R_{CSH}}$$

The equation above shows how current in the LED relates to the regulated voltage V_{REF}, which is 1.235V for the LM3421/LM3423.

The selection of resistors is not arbitrary; for matching and noise performance we suggest that the CSH current is 100µA. This current does not flow in the LEDs and will not affect either the off state LED current or the regulated LED current. The CSH current can be above or below this value, but the high side amplifier offset characteristics may be affected slightly. In addition, to hold an initial 5% tolerance on the LED current, R_{SENSE} should be selected to have at least 50mV across it at the desired LED current (R_{SENSE} greater than or equal to 50mV / I_{LED}). The power dissipated in the sense resistor (P_{SENSE}) is directly proportional to the sense voltage and the sense resistor value: $P_{SENSE} = I_{LED}^2 \times R_{SENSE}$.

Design Example: The user desires 1A of average LED current. 100mV is a typical starting point for V_{SENSE}, providing an R_{SENSE} of 100mV/1A = 100mΩ. This will limit the power dissipation in R_{SENSE} to 100mW while providing good regulation. Once a standard component value has been selected for R_{SENSE}, the value of the resistor in series with the HSP pin (R_{HSP}) can be calculated. The signal current set up by R_{HSP} should be set for approximately 100µA at the desired LED current.

$$R_{HSP} = I_{LED} \times \frac{R_{SENSE}}{I_{CSH}} = 1A \times \frac{100\ m\Omega}{100\ \mu A} = 1\ k\Omega$$

A resistor of equal value should be placed in series with the HSN pin to cancel out the effects of the input bias current (~10µA) of both inputs of the high side sense amplifier. The signal current (100µA) set up by the HSP resistor flows into the HSP pin and is translated down to appear as a source current from the CSH pin. The resistor from the CSH pin to ground (R_{CSH}) would nominally be 12.4kΩ. This value is chosen to convert the 100µA signal current representing the average LED current to a voltage very close to 1.235V, the

error amplifier's internally programmed reference voltage (V_{REF}).

So, given the values selected, the final average LED current can be calculated using the above equations:

$$I_{LED} = \frac{1.235V}{100\ m\Omega} \times \frac{1\ k\Omega}{12.4\ k\Omega} = 996\ mA$$

If it is desirable to use the CSH pin as a low side current sense input regulated to the 1.235V feedback voltage, simply tie both HSP and HSN to ground to disable the high side sense amplifier. An internal diode prevents reverse current flow to the HSP and HSN pins.

CURRENT SENSE/CURRENT LIMIT

The LM3421/LM3423 devices provide current mode control using a comparator that monitors the MOSFET transistor current, comparing it with the COMP pin voltage. Further, in incorporates a cycle-by-cycle over-current protection function. Current limit is accomplished by a redundant internal current sense comparator. If the voltage at the current sense comparator input (IS) exceeds 245mV (typical), the on cycle is immediately terminated. The IS input pin has an internal N-channel MOSFET which pulls it down at the conclusion of every cycle. The discharge device remains on an additional 210ns (typical) after the beginning of a new cycle to blank the leading edge spike on the current sense signal.

The $R_{DS(ON)}$ of the main power MOSFET can be used as the current sense resistor; the IS pin was designed to withstand the high voltages present on the drain when the MOSFET is in the off state. A sense resistor located in the source of the MOSFET may be used for current sensing, but a low inductance resistor is required. When designing with a current sense resistor, all of the noise sensitive low power ground connections should be connected together local to the controller and a single connection should be made to the high current PGND (sense resistor ground point).

OVER-VOLTAGE PROTECTION

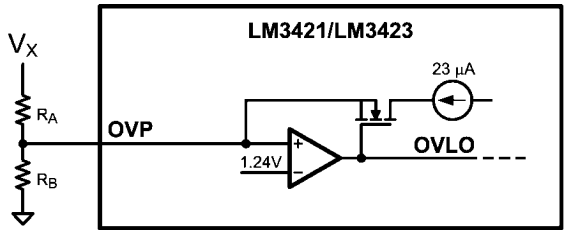

30067358

FIGURE 3. Over-Voltage Lock-Out Circuitry

The LM3421/LM3423 devices can be configured to detect either an input or an output over-voltage condition via the OVP pin. The pin features a precision 1.24V threshold with 23µA (typical) of hysteresis current. When the OVLO threshold is exceeded, the over-voltage state is entered and the GATE pin is immediately pulled low while the DDRV pin is pulled to the LED off state to prevent damage to the LEDs. A current source is turned on supplying 23µA of current out of the OVP pin to allow a user programmed lower threshold of the OVP hysteretic band (see *Figure 3*). To reduce the current consumption of the OVP voltage divider when in shutdown, the lower resistor may be tied to the RPD pin.

If the LEDs are referenced to a potential other than ground, as in the V_{IN} referenced flyback configuration, the output voltage (V_{LED}) is best sensed and translated to ground in order to use the OVLO function. This can be easily achieved using a single PNP-type bipolar transistor as shown in *Figure 4*.

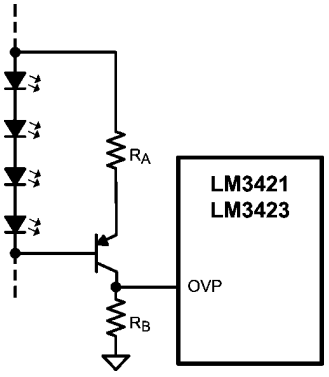

30067359

FIGURE 4. LED Forward Voltage OVP Sensing

Remember that the OVLO also protects the voltage on HSP and HSN so the circuit in *Figure 4* would not be appropriate in cases where the total output voltage is greater than 75V unless the sense resistor is imbedded within the LED string at a voltage lower than 75V.

This OVLO feature can cause some interesting results if the OVLO trip-point is set too close to the LED stack operating voltage. At turn-on, the converter has a modest amount of voltage overshoot before the control loop gains control of the average current. If this overshoot exceeds the OVLO threshold, the controller shuts down, but in doing so it opens the dimming MOSFET. This isolates the LED load from the converter and its output capacitors. With only the current flowing into the HSP and HSN pins, the output voltage droops very slowly and in approximately ½ second the output voltage drops below the OVLO threshold and the converter turns back on. An observer would see the LEDs blinking at about 2Hz. This mode can often be escaped if the input voltage is reduced. This is because the maximum current limit on the IS pin will limit the power intercepted by the converter at turn-on, thus preventing any overshoot. A detailed description of the turn-on overshoot and a simple solution are discussed in detail in the section titled *STARTUP INRUSH CURRENT*.

OVER-CURRENT PROTECTION

The LM3421/LM3423 devices also feature over-current protection. Switching action is disabled whenever the current in the LEDs is more than 30% above the regulation set point. The dimming MOSFET switch driver (DDRV) is not disabled however as this would immediately remove the fault condition and cause oscillatory behavior.

THERMAL SHUTDOWN

Both devices include thermal shutdown. If the die temperature reaches approximately 165°C the device will shut down until it cools to a safe temperature at which point the device will resume operation. If the adverse condition that is heating the device is not removed, the device will continue to cycle on and off to keep the die temperature below 165°C. Thermal shutdown has approximately 25°C of hysteresis. When in thermal shutdown, both the main regulator MOSFET (GATE) and the dimming MOSFET switch driver (DDRV) are disabled.

LM3423 ONLY: FAULT TIMER AND STATUS FLAGS

Among the LM3423's additional pins are TIMR and FLT which can be used in conjunction with an input disconnect MOSFET switch will protect the module from various fault conditions. An 11.5µA (typical) current is sourced from the TIMR pin whenever any of the following conditions exist: (1) LED current is above regulation by more than 30% (over-current protection has engaged as described above), (2) OVLO has engaged, or (3) thermal limit protection has engaged. An external capacitor on the TIMR pin acts to program the fault filter time. When the voltage on the TIMR pin reaches 1.24V, the device is latched off and the N-channel MOSFET open drain FLT pin transitions to a high impedance state. The TIMR pin will be immediately pulled to ground (reset) if the fault condition is removed at any point during the filter period.

If immediate latching is desired, simply use a 220pF timing cap on the TIMR pin. When using the EN and OVP pins in conjunction with the RPD pull-down pin, a race condition exists when exiting the disabled (EN low) state. When disabled, the OVP pin is pulled up to the output voltage because the RPD pull-down is disabled, and this will appear to be a real OVLO condition. The timer pin will immediately rise and latch the controller to the fault state. To protect against this behavior, a minimum capacitor should be populated from the TIMR pin to AGND of 220pF.

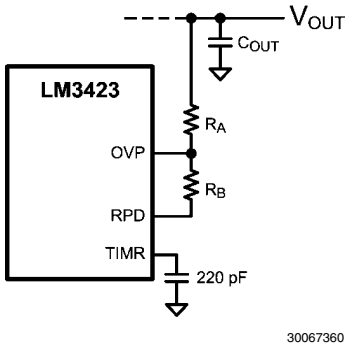

FIGURE 5. OVP Resistive Divider Grounded with RPD

If fault latching operation is not required, short the TIMR pin to ground. Note that if the TIMR pin is shorted to ground, the FLT flag function will also be disabled. When enabled, the FLT pin can be used in conjunction with an external P-channel MOSFET transistor to protect the module from shorts to ground on the output, as shown in the full featured application schematic (see *Figure 15*). A latched fault condition can be cleared by pulling the EN pin low long enough for the V_{CC} pin to drop below 4.1V (approximately 200ms), forcing the TIMR pin to ground, or by a complete power cycle.

The LM3423 also includes an LED Ready (LRDY) flag to notify the system that the LEDs are in proper regulation. The N-channel MOSFET open drain LRDY pin is pulled low whenever any of the following conditions are met: (1) V_{CC} UVLO has engaged, (2) LED current is below regulation by more than 20%, (3) LED current is above regulation by more than 30% (over-current protection has engaged), (4) overvoltage protection has engaged, (5) thermal limit protection has engaged, or (6) the part has been latched off because of a persistent fault condition. Note that the LRDY pin is pulled low during startup of the device and remains low until the LED current is in regulation.

Application Information

PREDICTIVE OFF-TIME TOPOLOGY

A History Lesson

Any clocked peak current mode converter has a right half plane zero when duty cycles exceed 50%, often referred to as “current mode instability” or “sub-harmonic oscillation”. In this context the word “clocked” should be considered to be a free running oscillator that starts a new “on” cycle with each tick. The right half plane zero manifests itself by a long on-time, short off-time cycle followed by a short on-time, long off-time cycle.

This instability leads to high stress in the components, creates large voltage and current ripple at half of the clocked frequency, and often becomes audible. Slope compensation is usually introduced into the control system to prevent this instability. As the required duty cycle approaches unity, the amount of required slope compensation increases accordingly. Further complicating the problem, a boost converter requires significantly more slope compensation than its buck counterpart, thus becoming impractical for large voltage transformation ratios. This translates to the necessity of limiting the maximum duty cycle in a boost converter and thus the voltage transformation ratio.

History Learned is Not Repeated

The LM3421/LM3423 controllers feature a different constant frequency control scheme, called predictive off-time control. This topology has several innate advantages:

- By not being clocked it has no current mode instability at any duty cycle.
- Allows duty cycles and thus voltage transformation ratios that would be impractical in a clocked current mode system, especially in a boost topology.
- Requires no slope compensation.

The only disadvantage is that synchronization to an external reference frequency is generally not available. Synchronization is “clocking” just like in an internal free running oscillator and would reintroduce the right half plane zero unless it is done with a phase locked loop.

SETTING THE SWITCHING FREQUENCY

For the boost, buck-boost, and SEPIC configurations, an external resistor connected between the RCT pin and the drain of the main switching transistor, V_{SW}, in combination with a capacitor C_T between the RCT and AGND pins, sets the switching frequency. To set the operational frequency (f), the R_T resistor and C_T capacitor can be calculated from:

$$f\ (\text{Hz}) = \frac{25}{(C_T R_T)}$$

We recommend a value of 1nF for CT and using that value, this simplifies the equation to:

$$R_T\ (\text{k}\Omega) = \frac{25}{f\ (\text{MHz})}$$

The R_T resistor and C_T capacitor should be located very close to the device.

Buck Configuration

When the device is used to implement the buck topology the control law is different. The internal circuitry of the device is designed to run constant frequency in a boost, buck-boost or

SEPIC application. When it is placed into a Buck converter a current is set charging the RCT pin set up by the PNP transistor and resistor network (see *Figure 13*) the Off Time T_{OFF} is controlled to be:

$$T_{OFF} = \frac{C_T \times R_T \times V_{IN}}{25 \times V_{OUT}}$$

This promotes a constant ripple converter were the ripple current magnitude is a function of the input voltage. There is no output capacitor and the Dimming control MOSFET is shunting the current away from the LEDs. As the converter is always in continuous conduction mode the duty factor is set by the input and output voltages. This fact allows us to give an equation for selecting the frequency setting components for the Buck converter. To select a timing resistor use this equation:

$$R_T = \frac{25 \times (V_{IN} \times V_{OUT} - V_{OUT}^2)}{C_T \times f \times V_{IN}^2}$$

In the above equation R_T is in kΩ, C_T is in nF, and f is in MHz. One could also select the timing resistor by setting their desired ripple current using the following equation:

$$R_T = \frac{25 \times I_{RIPPLE} \times L_{CHOKE}}{C_T \times V_{IN}}$$

For this equation R_T is in kΩ, C_T is in nF, L_{CHOKE} is in µH, and I_{RIPPLE} is in A.

The above describes a buck converter with constant ripple regardless of V_{LED} but that varies with V_{IN}. The LM3421/LM3423 can also be set up in a buck configuration where the ripple current varies with V_{LED} but remains constant over varying V_{IN}. See *Figure 14* for an example of how to implement constant ripple vs. V_{IN}.

INDUCTOR SELECTION

The inductor should be selected such that the switching regulator maintains continuous inductor current conduction over the input and output operating voltage and current ranges. The minimum inductor value is shown in the following equation for the non-Buck topologies:

$$L_{CHOKE} = \frac{K \times V_{IN} \times (V_{OUT} - V_{IN})}{2 \times f \times I_{LED} \times V_{OUT}}$$

In the above equation K should be a value between 3 and 5 depending on the most important application requirements. A lower value of K results in a smaller, lower cost inductor but also in higher ripple and lower efficiency. A higher value of K results in a larger, more costly inductor but will have lower ripple and higher efficiency.

For the Buck topology the inductor value is selected for a desired ripple current as shown in the previous section.

COMPENSATION

The controllers' error amplifier is a high output impedance, transconductance amplifier for easy, single-pin compensation. This controller is a current mode controller and the control loop feedback is monitoring the average output (LED) current. As such it would be expected that the compensation network could comprise a single capacitor to ground on the COMP pin. However, a two pole system results when an output capacitor is used to reduce the ripple current in the LEDs. Two pole systems can become unstable because the total phase shift approaches 180 degrees at unity gain crossover. A zero in the control compensation is needed; this takes the form of the resistor in series with the compensation capacitor. The value of this resistor should be designed to provide the same RC time constant with the compensation capacitor as the output capacitor has with the dynamic impedance of the LED string. If additional phase margin is desired, make the compensation time constant slower than the output time constant (larger value of resistor).

FAST PWM DIMMING CAPABILITY

These devices provide fast PWM LED dimming, thus enabling constant LED current for optimal color temperature. The DDRV pin is meant to drive the gate of an external dimming MOSFET. This drive will follow the PWM signal applied at the nDIM pin. The active low nDIM pin can be driven with a PWM signal up to 50kHz; the brightness of the LEDs can be varied by modulating the duty cycle of this signal. LED brightness is approximately proportional to the PWM signal duty cycle, so 30% duty cycle equals approximately 30% LED brightness. This function can be ignored if PWM dimming is not required by using nDIM solely as a V_{IN} UVLO input or by tying it directly to V_{CC} or V_{IN} (if less than 60VDC).

If high side dimming is implemented with a PMOS instead of an NMOS, the polarity of the dimming MOSFET driver must be reversed. The LM3423's DPOL pin is used to set the polarity of the DIM driver output, DDRV. Tying DPOL to ground causes the DDRV pin to be pulled up to V_{CC} during dim operation, and should be used when driving a PMOS dimming MOSFET. Note that when high side dimming, the high side PMOS gate protection zener's breakdown voltage should be selected to be roughly equal to the V_{CC} output voltage of approximately 7V. See *Figure 16* for further information. Tying DPOL to V_{CC} or leaving it open causes the DDRV pin to be low during dim operation and should be used when driving an NMOS dimming MOSFET.

A minimum on-time must be maintained in order for PWM dimming to operate in the linear region of its transfer function (see the graphs *Averege LED Current vs. PWM DIM Duty Cycle* and *30kHz PWM Dimming (5% Duty Cycle ON)*). Because the controller is disabled during dimming, the PWM pulse must be long enough such that the energy intercepted from the input is greater than or equal to the energy being put into the LEDs. For a boost and buck-boost regulator, the following condition must be maintained:

$$t_{PULSE} = \frac{2 \times I_{LED} \times V_{LED} \times L}{V_{IN}^2}$$

In the previous equation, t_{PULSE} is the length of the PWM pulse is seconds, I_{LED} is the average current in the LEDs in amperes, V_{LED} is the LED stack voltage in volts which is also often referred to as V_{OUT} or V_{BOOST}, L in the inductance in henries, and V_{IN} is the input voltage in volts.

BUCK HIGH SPEED DIMMING

These devices are able to implement a constant ripple buck converter. In this mode the PWM control of LED dimming is performed by shunting the current away from the LEDs and through a MOSFET. Please refer to *Figure 13* for the circuit details.

DETERMINING MAXIMUM NUMBER OF LEDS THAT CAN BE DRIVEN

The LM3421/LM3423 devices can drive any string of LEDs that will allow the current sense resistor to be below 75V. The sense resistor may be embedded within the string of LEDs to allow driving a stack of LEDs whose highest potential is above 75V. In this configuration, the IS pin must be tied to a source-side resistor; $R_{DS(ON)}$ sensing is not an option.

BOOST MODE INRUSH CURRENT

When configured as a boost converter, there is a "phantom" power path comprised of the inductor, the output diode, and the output capacitor. This path will cause two things to happen when power is applied. First, there will be a very large inrush of current to charge the output capacitor. Second, the energy stored in the inductor during this inrush will end up in the output capacitor, charging it to a higher potential than the input voltage. This voltage could, depending on the impedance of the source, reach a peak value determined by the following equation:

$$V_{PEAK} = V_{IN} \times \sqrt{L/C}$$

Depending on the state of the EN pin, the output capacitor would be discharged by:

1) EN < 1.3V, no discharge path (leakage only).

2) EN > 1.3V, the OVP divider resistor path, if present, and 10µA into each of the HSP & HSN pins. This output capacitor voltage could be higher than the OVP voltage. In this situation, the FLT pin (LM3423 only) is open and the PWM dimming MOSFET is turned off. This condition (the system appearing disabled) can persist for an undesirably long time; possible solutions include:

- Add an inrush diode from V_{IN} to the output. See *Figure 6*
- Add an NTC thermistor to prevent the inrush from overcharging the output capacitor so high.
- A current limited source supply.
- Raise the OVP threshold.

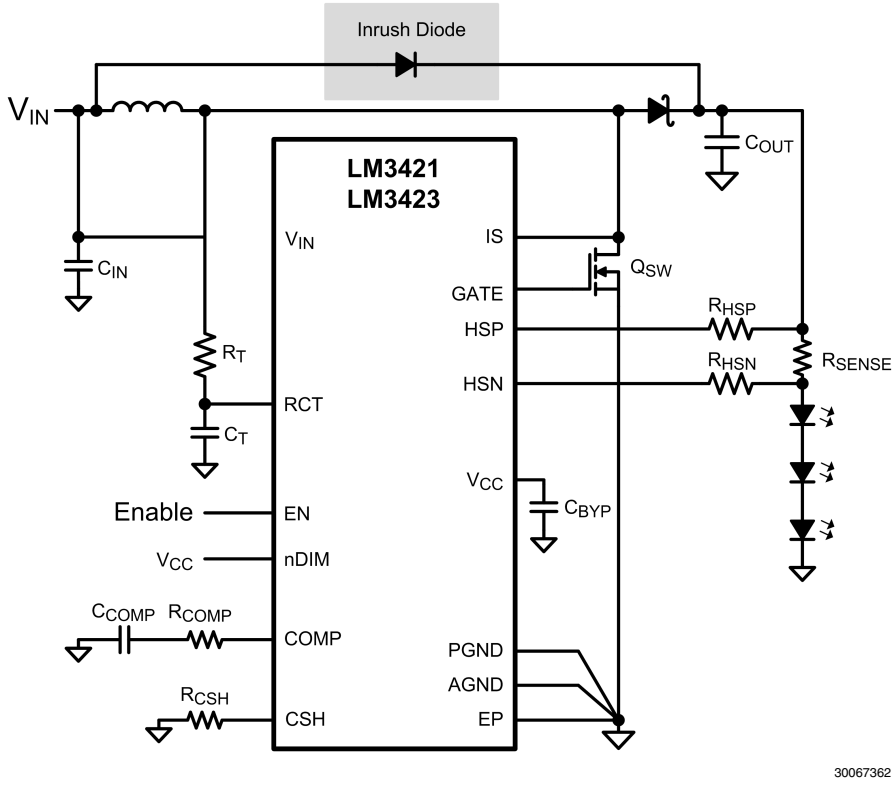

FIGURE 6. Boost Topology with Inrush Diode

STARTUP INRUSH CURRENT

The LM3421/LM3423 devices implement a true current source; they regulate current into a string of LEDs. When an output capacitor is used to reduce the ripple current into the LEDs, it is outside of the current control loop. During startup, an inrush current associated with charging the output capacitor up to the LED string "on" voltage is observed. During this inrush, there is little or no current flow in the LEDs so the error amplifier pulls the COMP pin up as high as it is able to. The input current rapidly reaches the current limit value set by the current limit comparator, 245mV (typical) across the main power switch or its source resistor depending on how the IS pin is configured. The input current stays "regulated" at that point until the voltage on the output capacitor rises high enough to drive current into the LED string. When the LED string exceeds the programmed current, the control loop forces the voltage on the COMP pin down until the output current into the LEDs is in regulation. This takes time and results in an overshoot in the LED current as the loop settles to its programmed value.

Regardless, this overshoot in LED current can, in some configurations, approach the 30% high over-current limit. As the input voltage increases, the power intercepted from the input source increases and therefore so does the associated overshoot. When the overshoot reaches 30%, the fault timer is activated and a race starts between the control loop acting to

bring the current down below the 30% high threshold and the fault timer interval. For short timer intervals, the controller simply shuts off in the fault lockdown mode. The user will observe the LEDs blink on once at power up should this condition exist. This overshoot of current can be prevented by adding a control zero into the system as detailed in *Figure 7*. Simply adding the shaded components eliminates this issue (see *Figure 8*). Note that for many configurations these components will not be required.

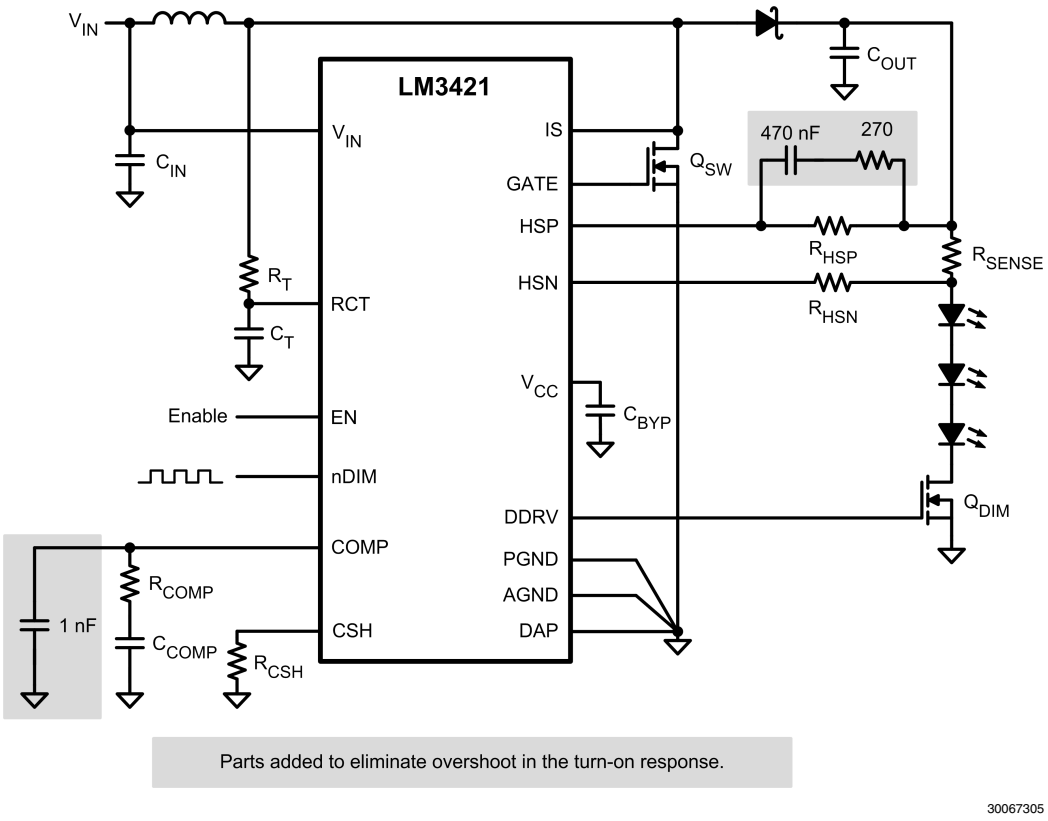

FIGURE 7. Boost LED Driver with Lead Compensation

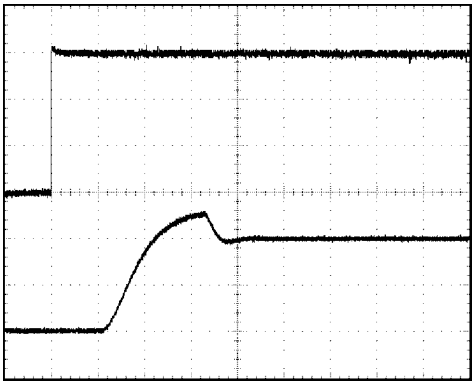

30067372

I_{LED} = 1A nominal, V_{IN} = 12V, $V_{LED(s)}$ = 20V, no lead compensation
Top trace: EN input, 1V/div, DC
Bottom trace: I_{LED}, 500mA/div, DC
T = 1ms/div

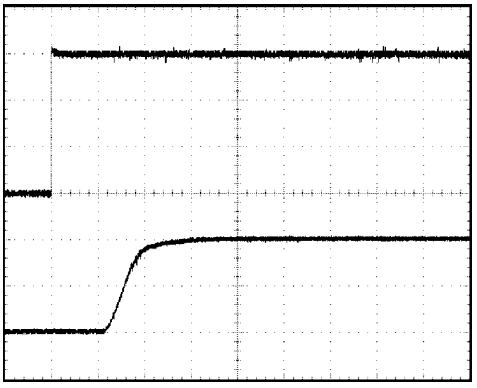

30067373

I_{LED} = 1A nominal, V_{IN} = 12V, $V_{LED(s)}$ = 20V, with lead compensation
Top trace: EN input, 1V/div, DC
Bottom trace: I_{LED}, 500mA/div, DC
T = 1ms/div

FIGURE 8. Scope Plots for Startup With and Without Lead Compensation

Another method of limiting the turn on overshoot is the selection of the R_{IS} Resistor that is between the IS pin and PGND. If the MOSFET channel resistance is used there is little that can be done, but by using a separate sense resistor placed in the source of the Mosfet (Please refer to *Figure 13* for circuit details) the peak input current can be set. Setting the peak current at the peak input voltage sets the peak power intercepted from the input during turn on. This sets the rate of rise of voltage on the output capacitor, and consequently the amount of overshoot seen as the control loop settles to its programmed value.

SLOW SHUTDOWN FEATURE (FADE OUT)

In some applications, particularly automotive interior lighting, it may be desirable for the LEDs to transition slowly to the off state rather than abruptly shutting off. This can be easily accomplished with a few small and inexpensive external components, as show in *Figure 9*.

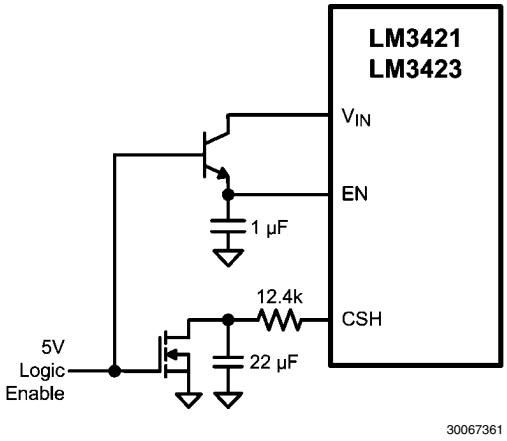

FIGURE 9. LM3421/LM3423 Slow Shutdown Circuit

This circuit simply delays the shutdown on the EN pin and slowly decreases the amount of current in the LEDs by decreasing the amount of current flowing out of the CSH pin, which is directly proportional to the LED current as previously discussed in the section titled *PROGRAMMING AVERAGE LED CURRENT*.

DESIGN EXAMPLES

The following set of schematics show the LM3421/LM3423 in various topology and feature set combinations. For more complete schematics and associated Bills of Materials (BoMs) and circuit board layouts, please see the application notes associated with the various demonstration boards that are available for these products.

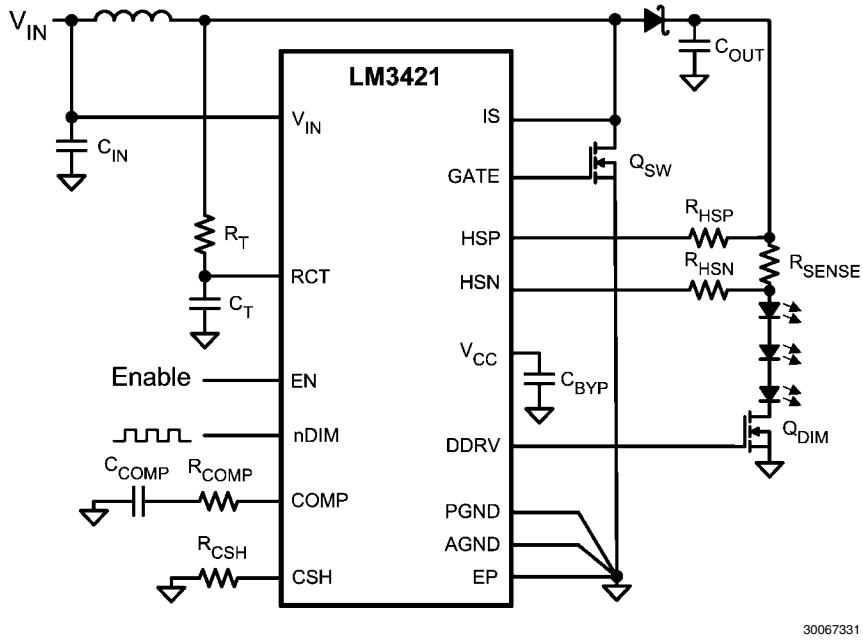

FIGURE 10. LM3421 Boost Topology with High Speed Dimming

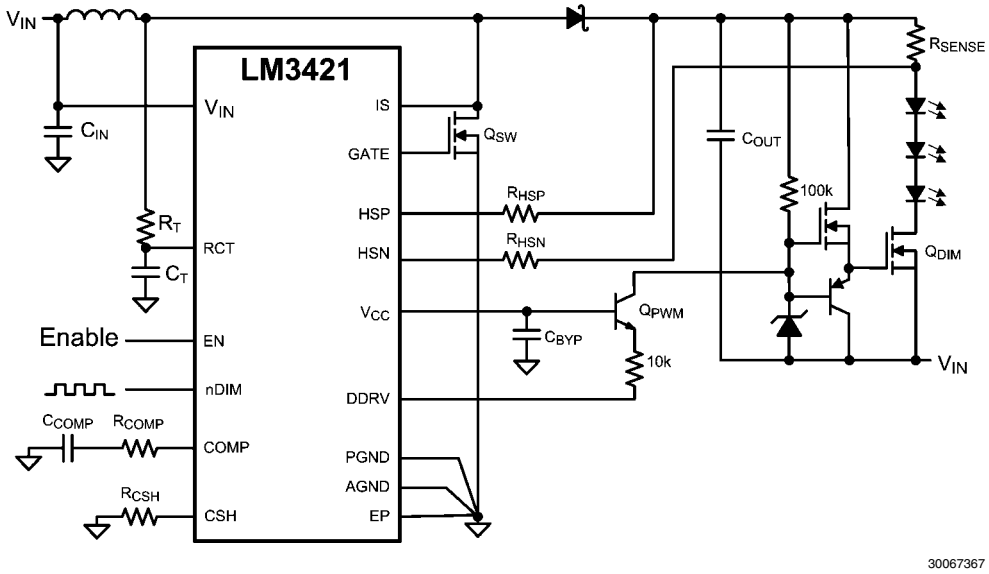

FIGURE 11. LM3421 Buck-Boost (Flyback) Topology with High Speed Dimming

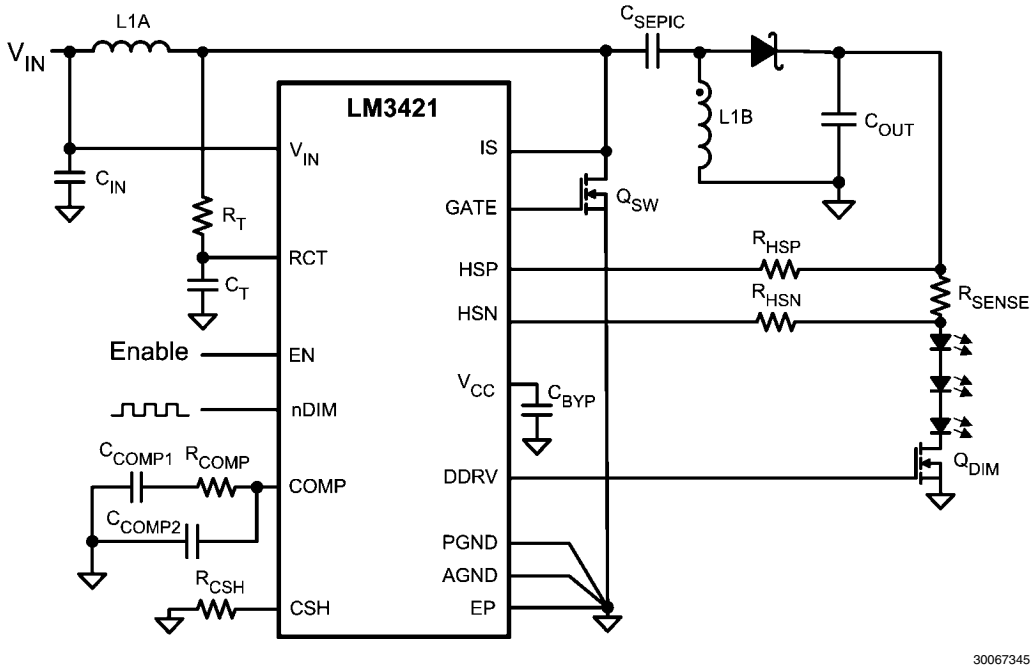

FIGURE 12. LM3421 SEPIC Topology with High Speed Dimming

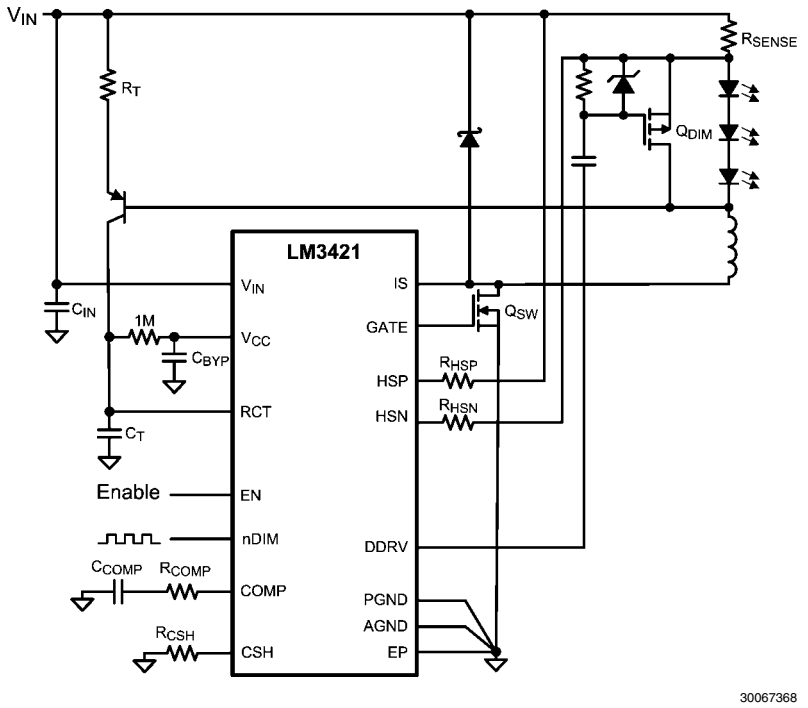

FIGURE 13. LM3421 Buck Topology with High Speed Shunt PWM Dimming and Constant Ripple Current vs. V_{LED}

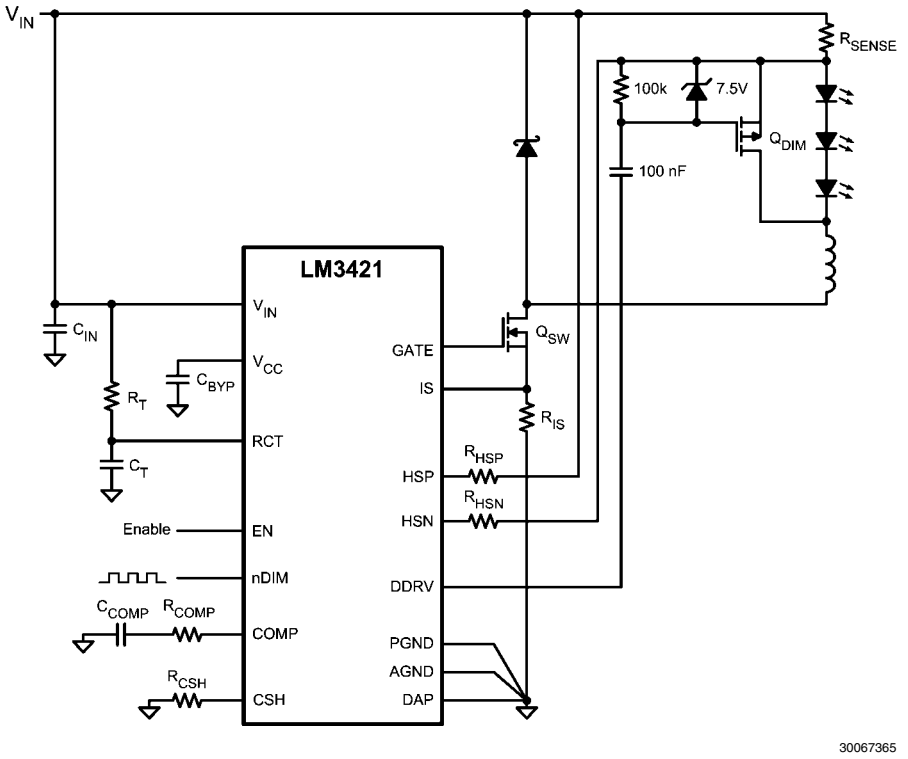

FIGURE 14. LM3421 Buck Topology with High Speed Shunt PWM Dimming and Constant Ripple Current vs. V_{IN}

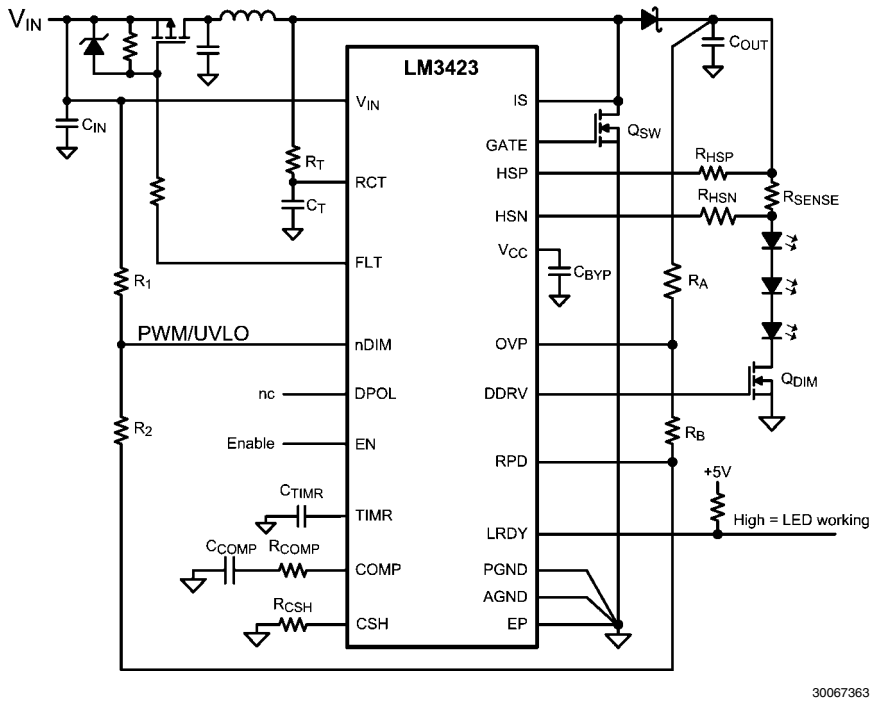

FIGURE 15. LM3423 Full Featured Application: Boost Topology, High Speed Dimming, Fault Detection, and Input Disconnect Switch

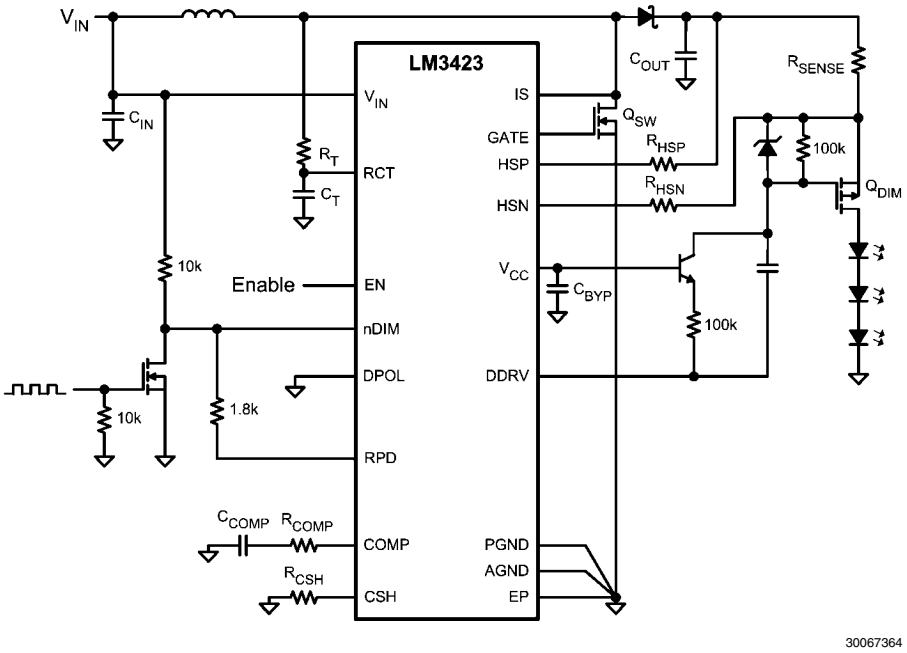

FIGURE 16. LM3423 Boost Topology with High-Side Dimming

Physical Dimensions inches (millimeters) unless otherwise noted

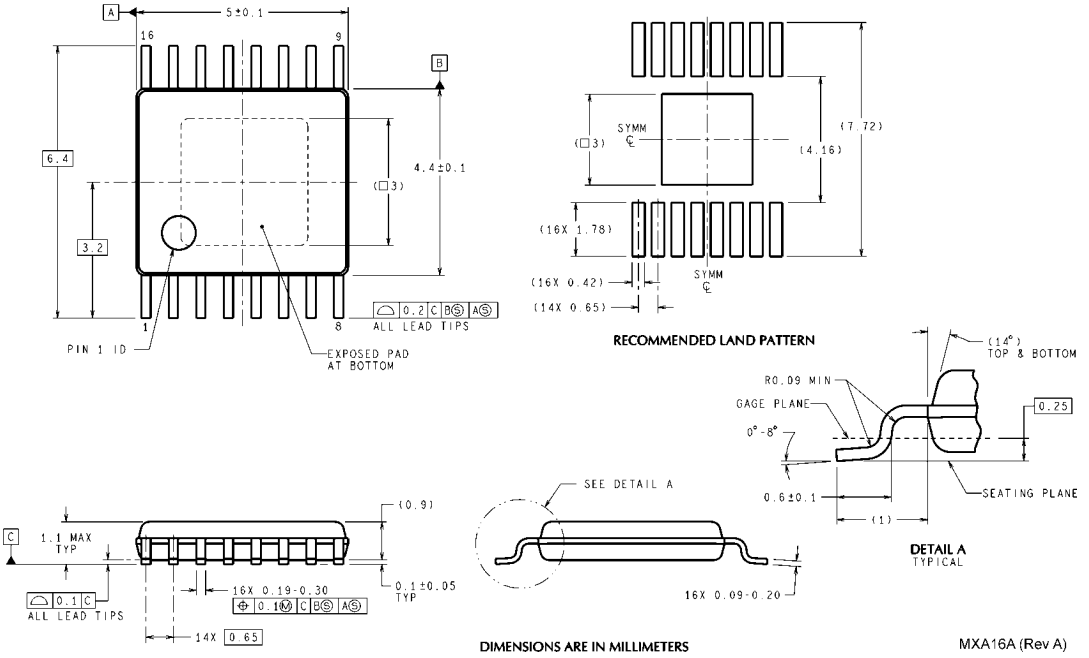

MXA16A (Rev A)

TSSOP-16 Pin EP Package (MXA)
For Ordering, Refer to Ordering Information Table
NS Package Number MXA16A

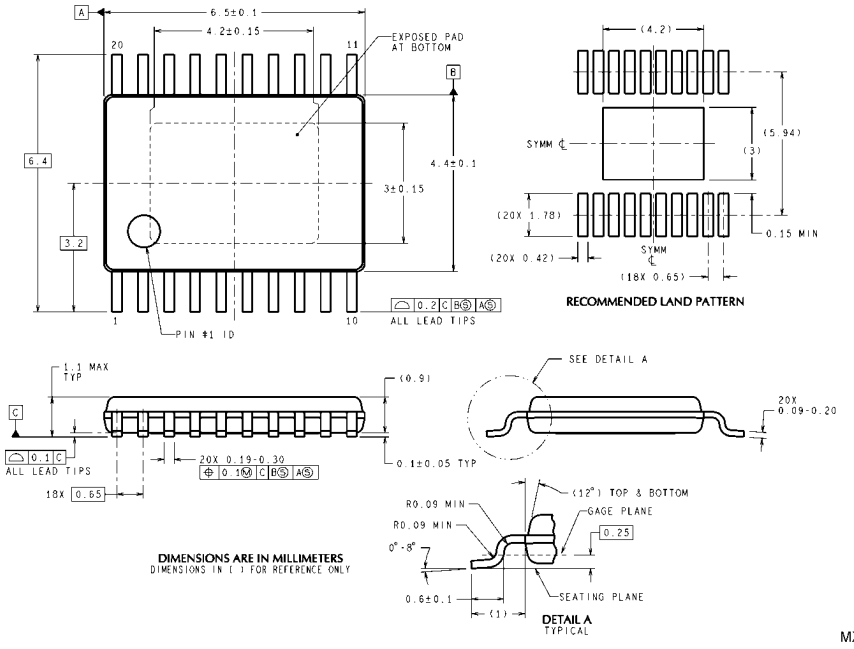

MXA20A (Rev C)

TSSOP-20 Pin EP Package (MXA)
For Ordering, Refer to Ordering Information Table
NS Package Number MXA20A

Notes

For more National Semiconductor product information and proven design tools, visit the following Web sites at:

Products		Design Support	
Amplifiers	www.national.com/amplifiers	WEBENCH	www.national.com/webench
Audio	www.national.com/audio	Analog University	www.national.com/AU
Clock Conditioners	www.national.com/timing	App Notes	www.national.com/appnotes
Data Converters	www.national.com/adc	Distributors	www.national.com/contacts
Displays	www.national.com/displays	Green Compliance	www.national.com/quality/green
Ethernet	www.national.com/ethernet	Packaging	www.national.com/packaging
Interface	www.national.com/interface	Quality and Reliability	www.national.com/quality
LVDS	www.national.com/lvds	Reference Designs	www.national.com/refdesigns
Power Management	www.national.com/power	Feedback	www.national.com/feedback
Switching Regulators	www.national.com/switchers		
LDOs	www.national.com/ldo		
LED Lighting	www.national.com/led		
PowerWise	www.national.com/powerwise		
Serial Digital Interface (SDI)	www.national.com/sdi		
Temperature Sensors	www.national.com/tempsensors		
Wireless (PLL/VCO)	www.national.com/wireless		

THE CONTENTS OF THIS DOCUMENT ARE PROVIDED IN CONNECTION WITH NATIONAL SEMICONDUCTOR CORPORATION ("NATIONAL") PRODUCTS. NATIONAL MAKES NO REPRESENTATIONS OR WARRANTIES WITH RESPECT TO THE ACCURACY OR COMPLETENESS OF THE CONTENTS OF THIS PUBLICATION AND RESERVES THE RIGHT TO MAKE CHANGES TO SPECIFICATIONS AND PRODUCT DESCRIPTIONS AT ANY TIME WITHOUT NOTICE. NO LICENSE, WHETHER EXPRESS, IMPLIED, ARISING BY ESTOPPEL OR OTHERWISE, TO ANY INTELLECTUAL PROPERTY RIGHTS IS GRANTED BY THIS DOCUMENT.

TESTING AND OTHER QUALITY CONTROLS ARE USED TO THE EXTENT NATIONAL DEEMS NECESSARY TO SUPPORT NATIONAL'S PRODUCT WARRANTY. EXCEPT WHERE MANDATED BY GOVERNMENT REQUIREMENTS, TESTING OF ALL PARAMETERS OF EACH PRODUCT IS NOT NECESSARILY PERFORMED. NATIONAL ASSUMES NO LIABILITY FOR APPLICATIONS ASSISTANCE OR BUYER PRODUCT DESIGN. BUYERS ARE RESPONSIBLE FOR THEIR PRODUCTS AND APPLICATIONS USING NATIONAL COMPONENTS. PRIOR TO USING OR DISTRIBUTING ANY PRODUCTS THAT INCLUDE NATIONAL COMPONENTS, BUYERS SHOULD PROVIDE ADEQUATE DESIGN, TESTING AND OPERATING SAFEGUARDS.

EXCEPT AS PROVIDED IN NATIONAL'S TERMS AND CONDITIONS OF SALE FOR SUCH PRODUCTS, NATIONAL ASSUMES NO LIABILITY WHATSOEVER, AND NATIONAL DISCLAIMS ANY EXPRESS OR IMPLIED WARRANTY RELATING TO THE SALE AND/OR USE OF NATIONAL PRODUCTS INCLUDING LIABILITY OR WARRANTIES RELATING TO FITNESS FOR A PARTICULAR PURPOSE, MERCHANTABILITY, OR INFRINGEMENT OF ANY PATENT, COPYRIGHT OR OTHER INTELLECTUAL PROPERTY RIGHT.

LIFE SUPPORT POLICY

NATIONAL'S PRODUCTS ARE NOT AUTHORIZED FOR USE AS CRITICAL COMPONENTS IN LIFE SUPPORT DEVICES OR SYSTEMS WITHOUT THE EXPRESS PRIOR WRITTEN APPROVAL OF THE CHIEF EXECUTIVE OFFICER AND GENERAL COUNSEL OF NATIONAL SEMICONDUCTOR CORPORATION. As used herein:

Life support devices or systems are devices which (a) are intended for surgical implant into the body, or (b) support or sustain life and whose failure to perform when properly used in accordance with instructions for use provided in the labeling can be reasonably expected to result in a significant injury to the user. A critical component is any component in a life support device or system whose failure to perform can be reasonably expected to cause the failure of the life support device or system or to affect its safety or effectiveness.

National Semiconductor and the National Semiconductor logo are registered trademarks of National Semiconductor Corporation. All other brand or product names may be trademarks or registered trademarks of their respective holders.

Copyright© 2008 National Semiconductor Corporation

For the most current product information visit us at www.national.com

National Semiconductor Americas Technical Support Center
Email: support@nsc.com
Tel: 1-800-272-9959

National Semiconductor Europe Technical Support Center
Email: europe.support@nsc.com
German Tel: +49 (0) 180 5010 771
English Tel: +44 (0) 870 850 4288

National Semiconductor Asia Pacific Technical Support Center
Email: ap.support@nsc.com

National Semiconductor Japan Technical Support Center
Email: jpn.feedback@nsc.com