Microtips Technology

Microtips Technology Inc.

台北縣汐止鎮康寧街169巷31號12樓
12F, No 31, Lane 169, Kang Ning St.
Hsi-Chih, Taipei Hsien, Taiwan, R.O.C.

WEB : http://www.microtips.com.tw
E-mail : Macros@microtips.com.tw
TEL: 886-2-2695-3133 FAX :886-2-2695-8625

LCD MODULE SPECIFICATION
FOR CUSTOMER'S APPROVAL

CUSTOMER : Standard

MODULE TYPE : MTG-S24064EFYHSAY

APPROVED BY: (FOR CUSTOMER USE ONLY)

Approved By	Checked By	Prepared By	MT File No	Date Issued

CONTENTS

ITEM	PAGE
FEATURES	3
LCD MODULE DRAWING	4
GENERAL SPECIFICATION	5
ABSOLUTE MAXIMUN RATING	5
ELECTRICAL CHARACTERISTICS	6
OPTICAL CHARACTERISTIC	6
MECHANICAL SPECIFICATION	7
INTERFACE PIN ASSIGNMENT	8
BLOCK DISGRAM	11
POWER SUPPLY	11
AC CHARACTERISTICS	12
TIMING CHART	12
DISPLAY CONTROL INSTRUCTIONS	13
THE RELATIONS BETWEEN LCD DISPLAY AND EVERY FACTOR:	17
DISPLAY MODE	18
INTERNAL CHARACTER GENERATOR PATTERNS AND CHARACTER CODES	19
RELIABILITY TEST	20
APPEARANCE CHECK	20
HANDLING PRECAUTIONS	21
LCD PRODUCT QUALITY STANDARD	22
REVISION HISTORY	23

SPECIFICATION FOR
LIQUID CRYSTAL DISPLAY MODULE
MODEL NO. : MTG-S24064EFYHSAY

View Direction	☑ 6 O'clock			☐ 12 O'clock	
LCD Type	☐ FSTN Positive			☐ FSTN Negative	
	☐ STN Gray	☑ STN Yellow Green		☐ STN Blue	
Rear Polarizer	☐ Reflective	☑ Transflective		☐ Transmissive	
Backlight Type	☑ LED	☐ Internal Power	☐ EL	☑ 5V input	
		☑ External Power	☐ CCFL	☐ 12V input	
Backlight Color	☐ White	☐ Amber	☐ Blue Green	☑ Yellow Green	☐ Other
Temperature Range	☐ Normal	☑ Wide		☐ Super Wide	
DC-to-DC Circuit	☐ Build-in	☑ Not Build-in			
EL Driver IC	☐ Build-in	☑ Not Build-in			
Touch Screen	☐ With	☑ Without			

TO BE VERY CAREFUL !

The LCD driver ICs are made of CMOS process, which is very easy to be damaged by static charge, make sure the user is grounded when handling the LCM.

REV.	DESCRIPTION	DRAWN	CHECK	APP'D	DATE

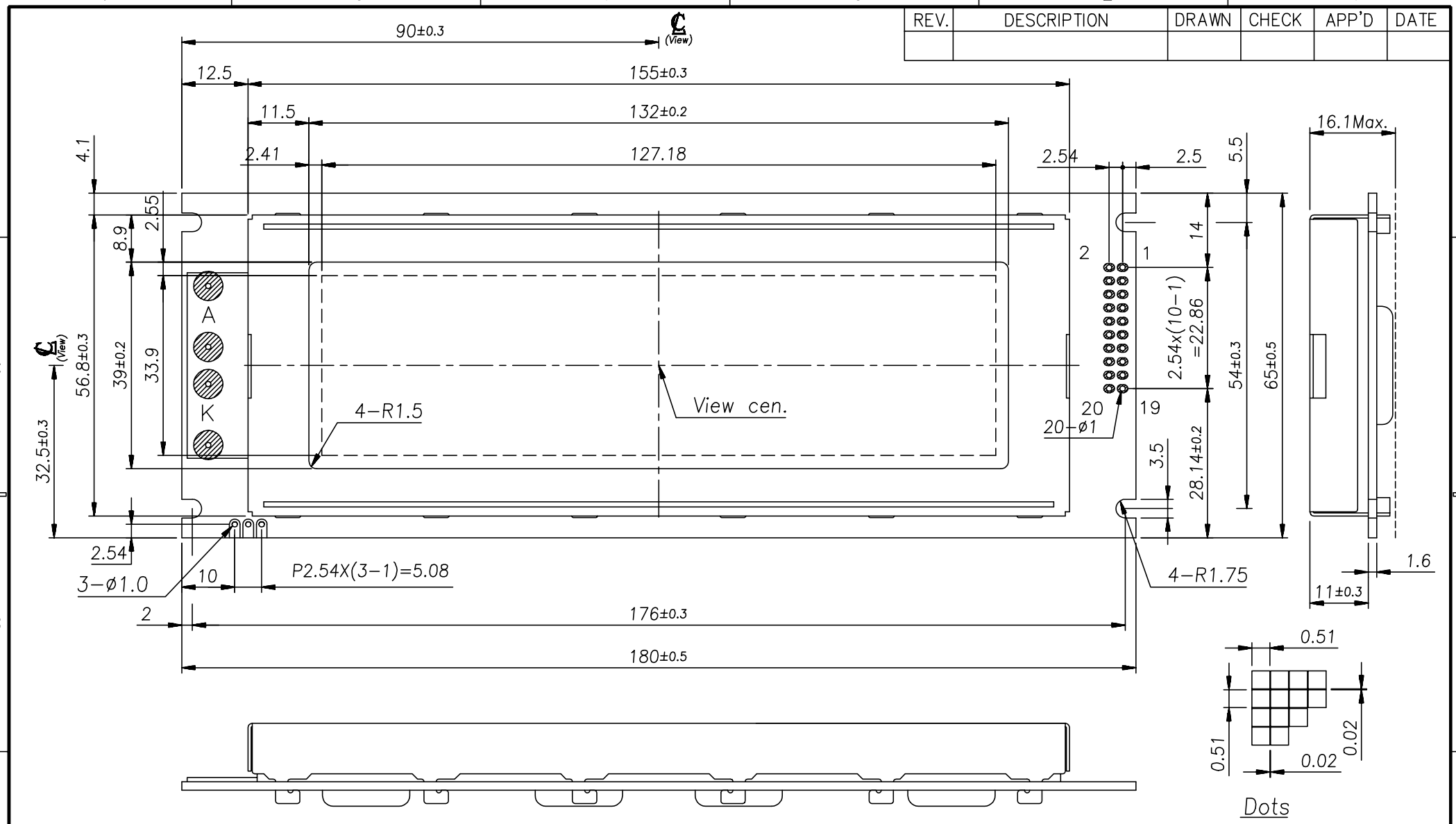

PIN ASSIGNMENT									
1.	VSS	5.	R/W	9.	DB2	13.	DB6	17.	VEE
2.	VDD	6.	E	10.	DB3	14.	DB7	18.	NC
3.	V0	7.	DB0	11.	DB4	15.	CS	19.	NC
4.	RS	8.	DB1	12.	DB5	16.	RES	20.	NC

NO.	M-24064XH PART NAME	Q'TY	04/12/00 DATE:	MATERIAL	FINISH

Microtips Technology	DRAWN	CHECK	APP'D	UNIT: MM	SCALE: 1/1	PRODUCT: MTG-24064E(H)
	Henry	Chris	Steele		UNLESS OTHERWISE SPECIFIED TOLERANCE ON FRACTIONS DECIMALS ANGLES 0.10 0.5°	DWG NO.: G24064E1
						FILE: DWG\MTG240\G24064E
						SHEET 1 / 1 Rev: A

GENERAL SPECIFICATION

Item	Content
Display Resolution	240(H)× 64(W)
Dimensional Outline(mm)	180.0 (W)× 65.0 (W)× 16.1(D) max
Display mode	Transflective Type
Circuit	Controller IC, Common-Driver IC, Segment-driver IC
Interface	V_{EE}, Data (DB0～DB7), RS, R/W, E, RES, CS, V_O.

ABSOLUTE MAXIMUN RATING

(1) Electrical Absolute Ratings

Item	Symbol	Min.	Max.	Unit	Note
Power Supply for Logic	V_{DD}-V_{SS}	-0.3	5.5	Volt	
Power Supply for LCD	V_{EE}-V_{SS}	0	26.0	Volt	
Input Voltage	V1	-0.3	V_{DD}	Volt	
Supply current for LED backlight	I_{LED}	-	1320	mA	

Note 1 : Operator should be grounded during handling LCM.

(2) Environmental Absolute Maximum Ratings

Item	Normal Temperature				Wide Temperature			
	Operating		Storage		Operating		Storage	
	Max,	Min.	Max,	Min.	Max,	Min.	Max,	Min.
Ambient Temperature	0℃	+50℃	-20℃	+70℃	-20℃	+60℃	-30℃	+70℃
Humidity(without condensation)	Note 2,4		Note 3,5		Note 4,5		Note 4,6	

Note 2 Ta≦50℃: 80% RH max
Ta>50℃: Absolute humidity must be lower than the humidity of 85%RH at 50℃
Note 3 Ta at -20℃ will be<48hrs at 70℃will be <120hrs when humidity is higher than 75%.
Note 4 Background color changes slightly depending on ambient temperature. This phenomenon is reversible.
Note 5 Ta≦70℃: 75RH max
Ta>70℃: absolute humidity must be lower than the humidity of 75%RH at 70℃
Note 6 Ta at -30℃ will be <48hrs, at 80 ℃ will be <120hrs when humidity is higher than 75%.

ELECTRICAL CHARACTERISTICS

Item	Symbol	Condition	Min.	Typ	Max.	Unit	note
Power Supply for Logic	V_{DD}-V_{SS}	-	4.5	5.0	5.5	Volt	
Input Voltage	V_{IL}	L level	V_{SS}	0.2 V_{DD}	-	Volt	
	V_{IH}	H level	0.8 V_{DD}	V_{DD}	-	Volt	
LCM Recommend LCD Module Driving Voltage	V_{DD} –V_o	Ta＝-20℃	-	-	-		
		Ta＝0℃	-	-	-	Volt	
		Ta＝25℃	12.4	12.8	13.2		
		Ta＝50℃	-	-	-		
Power Supply Current for LCM	I_{DD}	V_{DD} =5.0V V_{DD}-V_o =12.8V FLM=64Hz VLED=4.2V	-	12	15	mA	
	I_{EE}		-	1.5	3.0		
	I_{LED}			660	990		
	V_{EL}			100V/ 400Hz			AC

OPTICAL CHARACTERISTICS

Item	Symbol	Condition	Min.	Typ	Max.	Unit	note
Viewing angle range	Φf(12 o'clock)	When Cr≧2	-	34	-	Degree	9,10
	Φb(6 o'clock)		-	41	-		
	Φl(9 o'clock)		-	30	-		
	Φr(3 o'clock)		-	35	-		
Rise Time	Tr	V_{DD}-V_o =12.8V Ta=25℃		112		mS	
Fall Time	Tf			250			
Frame frequency	Frm		-	64	-	Hz	8,10
Contrast	Cr		-	4.2	-		7

MECHANICAL SPECIFICATIONS

ITEM	DESCRIPTION	
Product No.		MTG-S24064EFYHSAY
Module Size		180.0 (W)mm× 65.0(H)mm× 16.1(D)mm Max
Dot Size		0.51(W)mm× 0.51(H)mm
Dot Pitch		0.53(W)mm× 0.53(H)mm
Resolution		240(W)× 64(H) Dots Matrix
Duty Ratio		1/64 Duty
LCD Display Mode	STN	☐Gray Mode ☑Yellow Mode ☐Blue Mode
	FSTN	☐ Black & White(Normally White/Positive Image) ☐ Black & White(Normally White/Negative Image)
	Rear Polarizer:	☐ Reflective ☑ Transflective ☐ Transmissive ☐ Transflective(High Transmissive)
Viewing Direction		☑6 O'clock ☐12 O'clock ☐3 O'clock ☐9 O'clock
Backlight		☐W/O ☐CCFL ☐EL ☑LED
Controller		Sanyo LH7981 or compatible
DC/DC Converter		Without
EL Driver circuit		NA(Optional)

INTERFACE PIN ASSIGNMENT

PIN NO.	PIN OUT	FUNCTION DESCRIPTION
1	V_{SS}	GND
2	V_{DD}	Logic supply voltage
3	Vo	Power supply for LCD panel, tuned from V_{DD}-V_{EE}
4	RS	Register Select, Instruction Register for RS=1, Data Register for RS=0.
5	R/W	Read/Write. R/W=1 : MPU←LCM, Read R/W=0 : MPU→LCM, Write
6	E	Enable, Data is written at the fall of E and Data can be read while E=1.
7	DB0	3-state I/O Data Bus
8	DB1	
9	DB2	
10	DB3	
11	DB4	
12	DB5	
13	DB6	
14	DB7	
15	CS	Chip-select, active LOW.
16	RES	Reset, active LOW.
17	V_{EE}	LCD driver supply voltage
18	NC	No Connection
19	NC	No Connection
20	NC	No Connection

[Note 7] Definition of Operation Voltage (Vop)

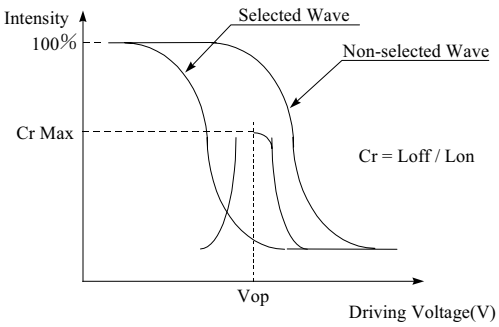

[positive type]

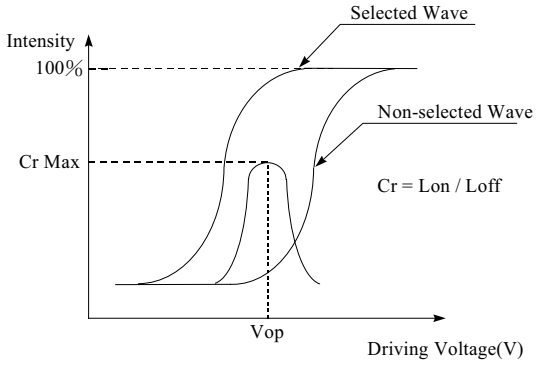

[Negative type]

[Note 8] Definition of Response Time (Tr, Tf)

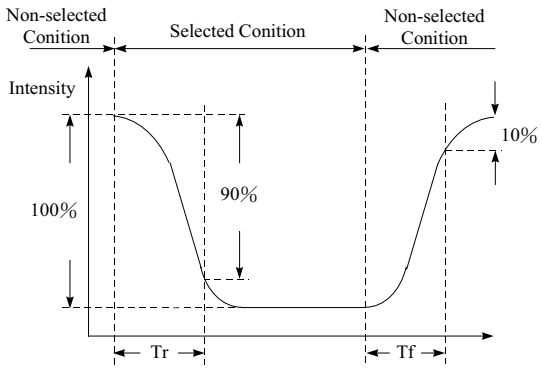

[positive type]

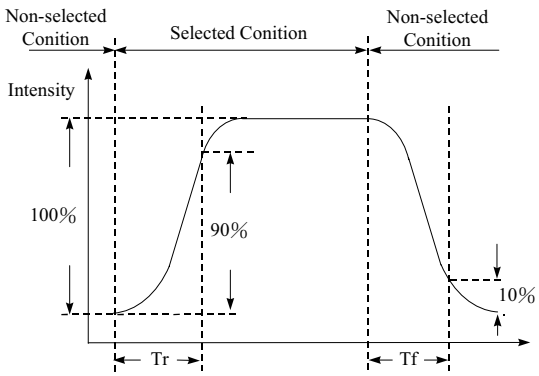

[Negative type]

Conditions:

Operating Voltage : Vop **Viewing Angle(θ, φ): 0°, 0°**

Frame Frequency : 64 Hz **Driving Wave form : 1/N duty, 1/a bias**

[Note 9] Definition of Viewing Direction

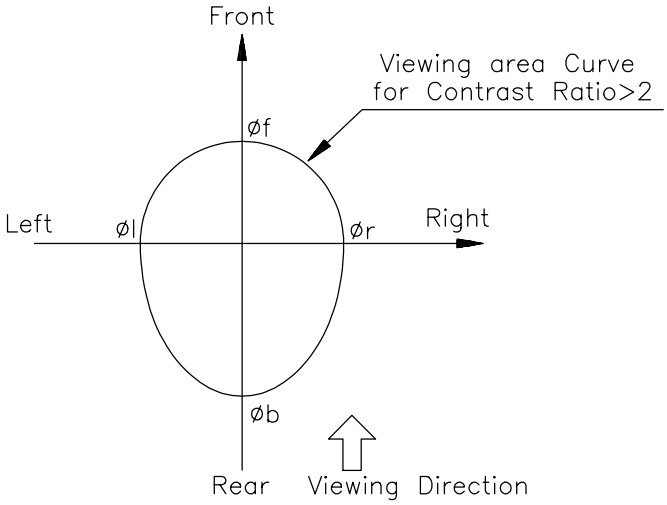

[Note 10] Definition of viewing angle

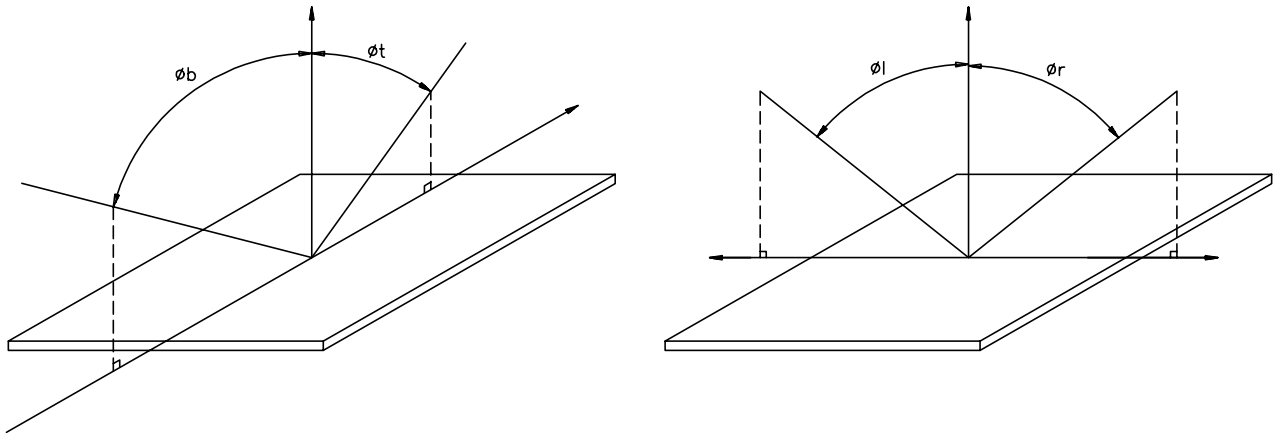

[Note 11] Description of Measuring Equipment

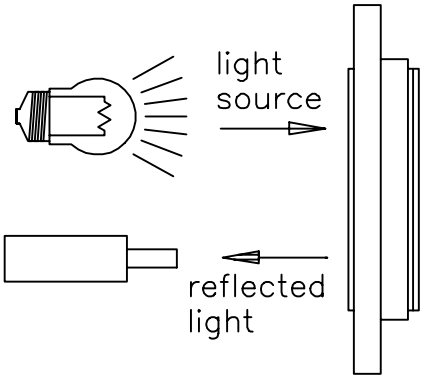

Reflective type

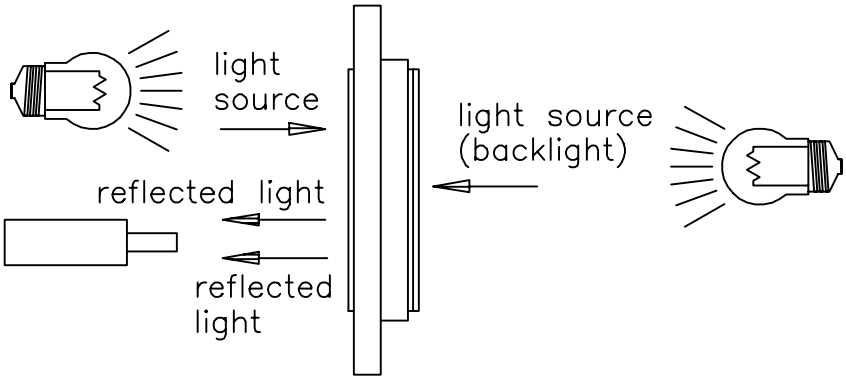

Transflective type

BLOCK DIAGRAM

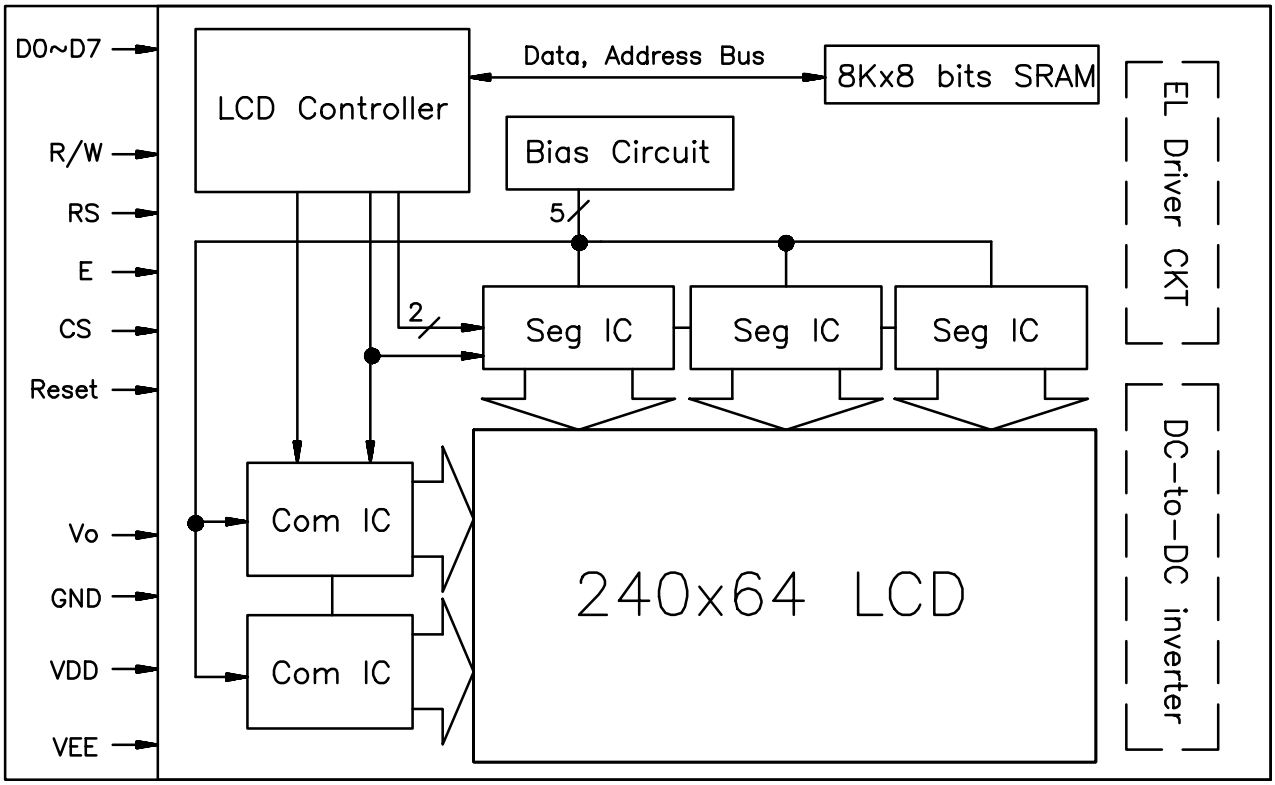

POWER SUPPLY

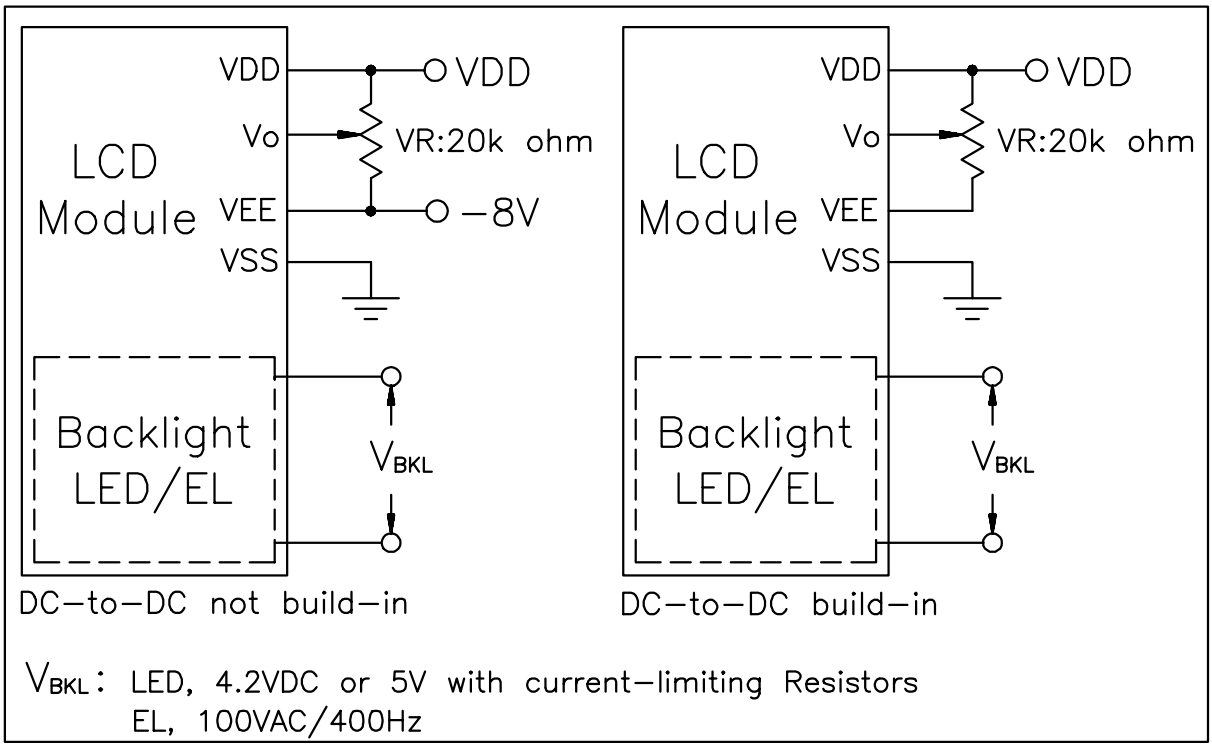

AC CHARACTERISTIC

(V_{DD}=5.0V± 10%, V_{SS}=0V, Ta=0 to 50℃)

Item	Symbol	Min.	Typ.	Max.	Unit
Enable cycle time	t_{CYC}	1.0	-	-	μs
Enable pulse high level width	t_{WEH}	0.45	-	-	μs
Enable pulse low level width	t_{WEL}	0.45	-	-	μs
Enable rise time	t_{Er}	-	-	25	ns
Enable fall time	t_{Ef}	-	-	25	ns
Setup time	t_{AS}	90	-	-	ns
Data setup time	t_{DSW}	220	-	-	ns
Data delay time	t_{DDR}	-	-	140	ns
Data hold time	t_{DHW}	10	-	-	ns
Address hold time	t_{AH}	10	-	-	ns
Output data hold time	t_{DH}	20	-	-	ns

Timing Chart

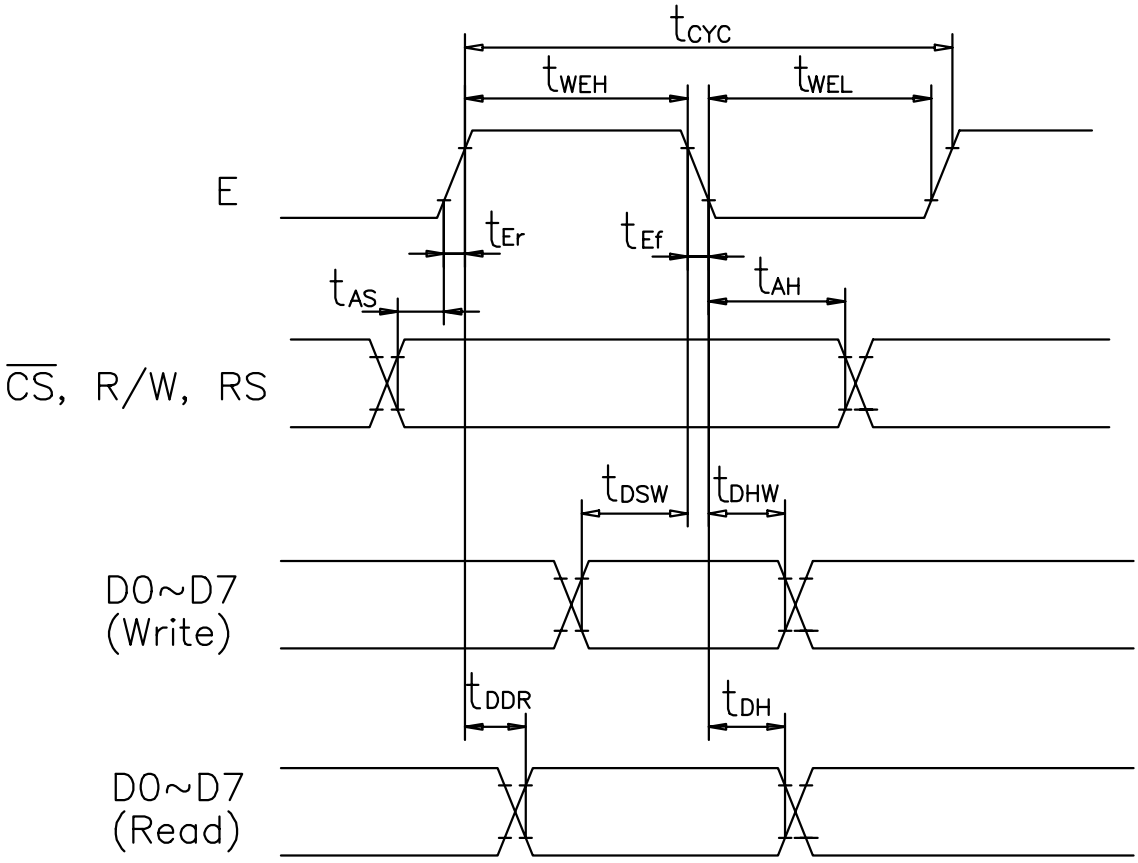

DISPLAY CONTROL INSTRUCTIONS

The display is controlled by writing data into the instruction register and 13 data registers. The RS signal distinguishes the instruction register from the data registers. 8-bit data is written into the instruction register with RS = 1, and the data register code is specified. After that, the 8-bit data is written in the data register and the specified instruction is executed with RS = 0. During the execution of the instruction, no new instruction can be accepted. Since the busy flag is set during this, read the busy flag and make sure it is 0 before writing the next instruction.

1. Mode control：

Writes code “00H”(in hexadecimal notation) in the instruction register and specify the mode control register.

Register	R/W	RS	DB7	DB6	DB5	DB4	DB3	DB2	DB1	DB0
Instruction register	0	1	0	0	0	0	0	0	0	0
Mode control register	0	0	0	0	A5	A4	A3	A2	A1	A0

A5：Display ON/OFF　　1：display ON,

0：display OFF

A4：Master/Slave　　1：master mode

0：slave mode

A3/A2 define the Cursor/Blink function:

A3	A2	Cursor/Blink
0	0	Cursor OFF
0	1	Cursor ON
1	0	Cursor OFF character blink
1	1	Cursor blink

A1：Character/Graphic Mode　　1：Graphic Mode

0：Character Mode

*A2 and A3 must be 0(Cursor OFF) if in Graphic Mode (A1=1)

A0：External/Build-in CG　　1：External CG

0：Build-in CG

2. Set Character Pitch：

Vp indicates the number of vertical dots per character. The space between the vertically displayed characters is included in the determination. This value is meaningful only during character display (in the character mode) and becomes invalid in the graphic mode. Hp indicates the number of horizontal dots per character in display, including the space between horizontally displayed characters. In the graphic mode, the Hp indicates the number of bits of 1-byte display data to be displayed.

Register	R/W	RS	DB7	DB6	DB5	DB4	DB3	DB2	DB1	DB0
Instruction register	0	1	0	0	0	0	0	0	0	1
Character pitch register	0	0	(Vp-1) Binary				0	(Hp-1) Binary		

Hp	DB2	DB1	DB0	
6	1	0	1	Horizontal character pitch 6
7	1	1	0	Horizontal character pitch 7
8	1	1	1	Horizontal character pitch 8

3. Set Number of Characters:

H_N indicates the number of horizontal characters in the character mode or the number of horizontal bytes in the graphic mode. If the total sum of horizontal dots on the screen is taken as n,

$n = Hp \times H_N$

H_N can be set to an even number from 2 to 256 (decimal).

Register	R/W	RS	DB7	DB6	DB5	DB4	DB3	DB2	DB1	DB0
Instruction register	0	1	0	0	0	0	0	0	1	0
Character number register	0	0	(H_N-1) Binary							

4. Set Number of Time Divisions (Inverse of Display Duty Ratio):

N_X indicates the number of time divisions in multiplex display.

$1/N_X$ is the display duty ratio.

A value of 1 to 256 (decimal) can be set to N_X .

Register	R/W	RS	DB7	DB6	DB5	DB4	DB3	DB2	DB1	DB0
Instruction register	0	1	0	0	0	0	0	0	1	1
Time division register	0	0	(H_X-1) Binary							

5. Set Cursor Position:

Cp indicates the position in a character where the cursor is displayed in character mode. For example, in 5×7 dot font, the cursor is displayed under a character by specifying Cp = 8 (decimal). The cursor horizontal length is equal to the horizontal character pitch Hp. A value of 1 to 16 (decimal) can be set to Cp. If a smaller value than the vertical character pitch Vp is set (Cp≦Vp), and a character overlaps with the cursor, the cursor has higher priority of display (at cursor display on). If Cp is greater than Vp, no cursor is displayed. The cursor horizontal length is equal to Hp.

Register	R/W	RS	DB7	DB6	DB5	DB4	DB3	DB2	DB1	DB0
Instruction register	0	1	0	0	0	0	0	1	0	0
Cursor position register	0	0	0	0	0	0	(Cp-1) Binary			

6. Set Display Start Low Order Address:
Cause display-start addresses to be written in the display start address registers. The display start address indicates a RAM address at which the data displayed at the top left end on the screen is stored. In the graphic mode, the start address is composed of high/low order 16 bits. In the character display, it is composed of the lower 4 bits of high order address (DB3~DB0) and 8 bits of low order address. The upper 4 bits of high order address are ignored.

Register	R/W	RS	DB7	DB6	DB5	DB4	DB3	DB2	DB1	DB0
Instruction register	0	1	0	0	0	0	1	0	0	0
Display start address register(low order byte)	0	0	(Start low order address) binary							

Set Display Start High Order Address

Register	R/W	RS	DB7	DB6	DB5	DB4	DB3	DB2	DB1	DB0
Instruction register	0	1	0	0	0	0	1	0	0	1
Display start address register(high order byte)	0	0	(Start high order address) binary							

7. Set Cursor Address (Low Order) (RAM Write Low Order Address):
Cause cursor addresses to be written in the cursor address counters. The cursor address indicates an address for sending or receiving display data and character codes to or from the RAM. That is, data at the address specified by the cursor address are read/written. In the character mode, the cursor is displayed at the character specified by the cursor address. A cursor address consists of the low-order address (8 bits) and the high-order address (8 bits). Satisfy the following requirements setting the cursor address (Table 2). The cursor address counter is a 16-bit up-counter with set and reset functions. When bit N changes from 1 to 0, bit N + 1 is incremented by 1. When setting the low order address, the LSB (bit 1) of the high order address is incremented by 1 if the MSB (bit 8) of the low order address changes from 1 to 0. Therefore, set both the low order address and the high order address as shown in the table as below.

Register	R/W	RS	DB7	DB6	DB5	DB4	DB3	DB2	DB1	DB0
Instruction register	0	1	0	0	0	0	1	0	1	0
Cursor address counter (low order byte)	0	0	(Cursor low order address) binary							

Register	R/W	RS	DB7	DB6	DB5	DB4	DB3	DB2	DB1	DB0
Instruction register	0	1	0	0	0	0	1	0	1	1
Cursor address counter (high order byte)	0	0	(Cursor high order address) binary							

Cursor Address Setting

Condition	**Requirement**
When you want to rewrite (set) both the low order address and the high order address.	Set the low order address and then set the high order address.
When you want to rewrite only the low order address.	Do not fail to set the high order address again after setting the low order address.
When you want to rewrite only the high order address.	Set the high order address. You do not have to set the low order address again.

8. Write Display Data:
After the code $ ”0C” is written into the instruction register with RS = 1, 8-bit data with RS = 0 should be written into the data register. This data is transferred to the RAM specified by the cursor address as display data or character code. The cursor address is increased by 1 after this operation.

Register	R/W	RS	DB7	DB6	DB5	DB4	DB3	DB2	DB1	DB0
Instruction register	0	1	0	0	0	0	1	1	0	0
RAM	0	0	MSB			(pattern data, character code)				LSB

9. Read Display Data:
Data can be read from the RAM with RS = 0 after writing code $”0D” into the instruction register. This instruction outputs the contents of data output register on the data bus (DB0 to DB7) and then transfers RAM data specified by the cursor address to the data output register, also increasing the cursor address by 1. After setting the cursor address, correct data is not output at the first read but at the second one. Thus, make one dummy read when reading data after setting the cursor address.

Register	R/W	RS	DB7	DB6	DB5	DB4	DB3	DB2	DB1	DB0
Instruction register	0	1	0	0	0	0	1	1	0	1
RAM	0	0	MSB			(pattern data, character code)				LSB

10. Clear Bit:
The clear/set bit instruction sets 1 bit in a byte of display data RAM to 0 or 1, respectively. The position of the bit in a byte is specified by N_B and RAM address is specified by cursor address. After the execution of the instruction, the cursor address is automatically increased by 1. NB is a value from 1 to 8. $N_B = 1$ and $N_B = 8$ indicates LSB and MSB, respectively.

Register	R/W	RS	DB7	DB6	DB5	DB4	DB3	DB2	DB1	DB0
Instruction register	0	1	0	0	0	0	1	1	1	0
Bit clear register	0	0	0	0	0	0	0	(N_B-1) binary		

Bit Set

Register	R/W	RS	DB7	DB6	DB5	DB4	DB3	DB2	DB1	DB0
Instruction register	0	1	0	0	0	0	1	1	1	1
Bit set	0	0	0	0	0	0	0	(N_B-1) binary		

11. Read Busy Flag:
When the read mode is set with RS = 1, the busy flag is output to DB7. The busy flag is set to 1 during the execution of any of the other instructions. After the execution, it is set to 0. The next instruction can be accepted. No instruction can be accepted when busy flag = 1. Before executing an instruction or writing data, perform a busy flag check to make sure the busy flag is 0. When data is written in the register (RS = 1), no busy flag changes. Thus, no busy flag check is required just after the write operation into the instruction register with RS = 1. The busy flag can be read without specifying any instruction register.

Register	R/W	RS	DB7	DB6	DB5	DB4	DB3	DB2	DB1	DB0
Instruction register	1	1	1/0	*						

THE RELATIONS BETWEEN LCD DISPLAY AND EVERY FACTOR:

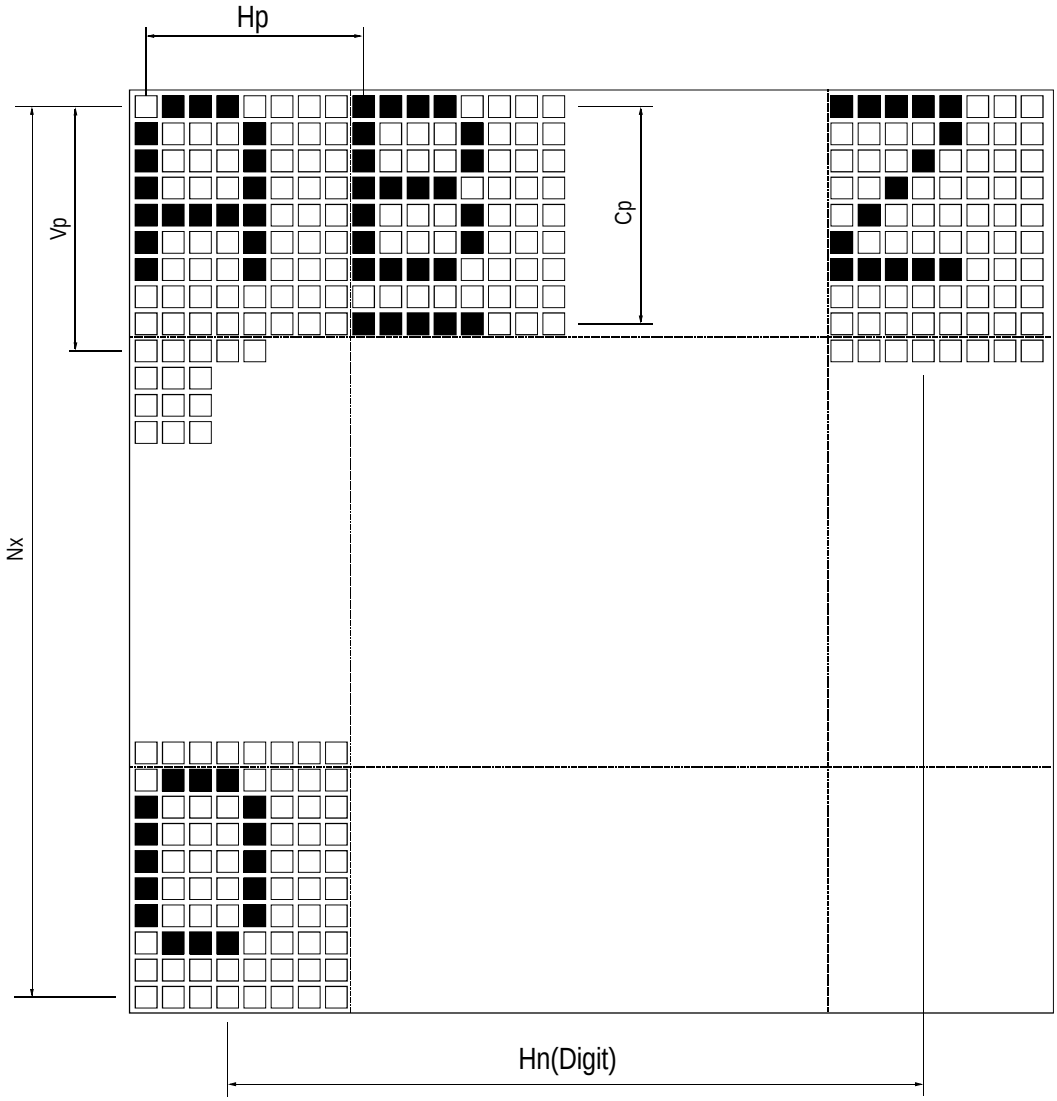

Symbol	Name	Meaning	Value
Hp	Horizontal character pitch	Horizontal character pitch	6 to 8 dots
Hn	Number of horizontal characters	Number of horizontal characters per line (number of digits) in the character mode or number of bytes per line in the graphic mode	2 to 128 digits (an even number)
Vp	Vertical character pitch	Vertical character pitch	1 to 16 dots
Cp	Cursor position	Line number on which the cursor can be displayed	1 to 16 lines
NX	Number of time divisions	Inverse of display duty ratio	1 to 128 lines

Note: If the number of vertical dots on the screen is m, and the number of horizontal dots is n,

1/m = 1/N X = display duty ratio

n = Hp×Hn ,

m/Vp = Number of display lines

C p≦Vp

Display Mode

Display Mode	Display data from MPU	RAM	Liquid Crystal Display Panel
Character display	Character code (8 bits)	b7 b6 b5 b4 b3 b2 b1 b0 0 1 0 0 0 0 0 1 0 1 0 0 0 0 1 0 Start Address	Hp A B C Hp : 6,7 or 8 dots
Graphic display	Display Pattern (B bits)	b7 b6 b5 b4 b3 b2 b1 b0 0 1 0 1 0 1 0 1 1 1 1 1 1 1 1 1 Start Address	b0 Hp b7 8 dots 8 dots Hp : 8 dots

Internal Character Generator Patterns and Character Codes

Upper 4 bits / Lower 4 bits	0000	0001	0010	0011	0100	0101	0110	0111	1000	1001	1010	1011	1100	1101	1110	1111
0000	**CG RAM (1)**															
0001	**CG RAM (2)**															
0010	**CG RAM (3)**															
0011	**CG RAM (4)**															
0100	**CG RAM (5)**															
0101	**CG RAM (6)**															
0110	**CG RAM (7)**															
0111	**CG RAM (8)**															
1000	**CG RAM (1)**															
1001	**CG RAM (2)**															
1010	**CG RAM (3)**															
1011	**CG RAM (4)**															
1100	**CG RAM (5)**															
1101	**CG RAM (6)**															
1110	**CG RAM (7)**															
1111	**CG RAM (8)**															

RELIABILITY TEST

No	Item	Conditions		Note
1	High Temp. Operation	70℃	240 HR	
2	High Temp. Storage	80℃	240 HR	
3	Low Temp. Operation	-20℃	240 HR	
4	Low Temp. Storage	-30℃	240 HR	
5	High Temp./Humid Storage	60℃ 90%RH	240 HR	
6	Thermal Shock	-20℃ ,30min +60℃ ,30min	10 cycleS	
7	Vibration Test (IEC-68-2-6)	Frequency : 10~55 Hz Duration : 20 times, 6 min/time Amplitude : 0.75 mm	-	
8	Shock (IEC 68-2-27)	Duration : 11 mS Acceleration : 100g	-	X, Y, Z direction

APPEARANCE CHECK

CONDIITON OF APPEARANCE CHECK:

(1)Specimen shall be checked by eyes in distance of 30cm under 40w-fluorescence lamp.

(2)Checking direction shall be in 45 degree from perpendicular line op specimen surface.

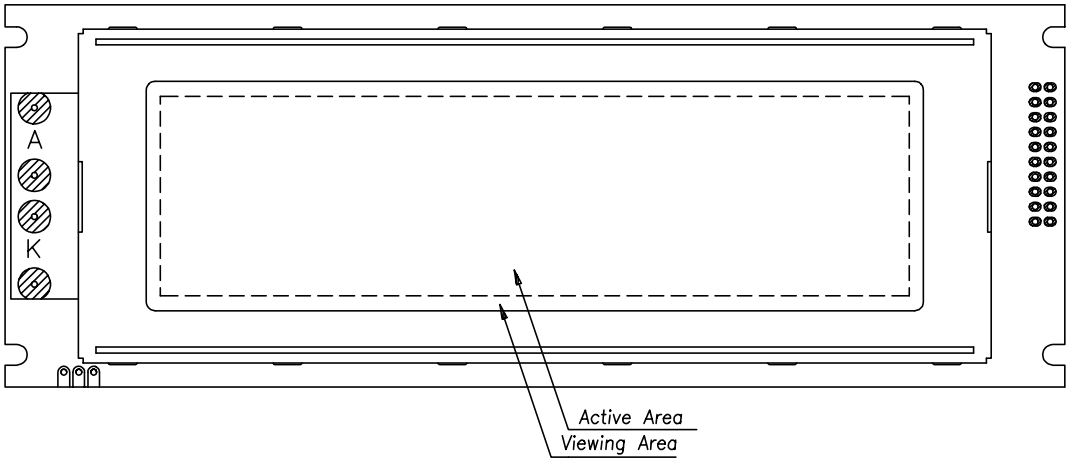

HANDLING PRECAUTIONS

(1) Treat polarizer very carefully since it is easy to be damaged.

(2) When cleaning the display surface, use soft cloth (e.g. gauss) with a solvent (recommended below) and wipe lightly.

- ◆ ethyl alcohol
- ◆ iso-prcolol

Do not wipe the display surface with dry or hard materials that will damage the polarizer surface.

Do not use the following solvents:

- ◆ water
- ◆ ketone
- ◆ aromatics

(3) Direct current causes electro-chemical reaction with remarkable degradation of the display quality. Give careful consideration to prevent direct current at ON/OFF timing and during operation.

(4) Avoid strong shock and drop from the height.

(5) To prevent LCD panels from degradation, do not operate or store them exposed directly to sunshine or high temperature/humidity.

(6) Give careful consideration to avoid electrical static discharge with causes uneven contrast.

(7) Even a small condensation on the contact pads (terminals) causes electro-chemical reaction which makes missing row and column. Give careful attention to avoid condensation. When assembling with zebra connector, clean the surface of the pads with alcohol and keep the air very clean.

LCD PRODUCT QUALITY STANDARD

DISPLAY APPEARANCE

No	Item	Criteria
1	inclusions (black spot, white spot, dust)	(1)round type diameter mm(a*) no of defect* a≦0.20 neglect 0.20＜a≦0.35 5max 0.35＜a none (2)linear type length mm(l) width mm(W) no. of defect na W≦0.03 neglect l≦3 0.03＜W≦0.08 6 3＜l 0.08＜W none
2	scratch	1.scratch on protective film is permitted. 2.scratch on polarizer shall be as follow: (1)round type diameter mm(a*) no of defect a≦0.15 neglect 0.15＜a≦0.20 2 max 0.20＜a none (2)linear type be judged bye 1.-(2) linear type
3	dent	diameter ＜ 1.5mm
4	bubble	not exceeding 0.5mm average diameter is acceptable between glass and polarizing film
5	pin hole	(a+b)/2 ≦ 0.15mm maximum number: ignored 0.15＜(a+b)/2≦0.20mm maximum number:10
6	dot defect	(a+b)/2≦0.20mm maximum number: ignored 0.20＜(a+b)/2≦0.30mm maximum number:5 x=width
7	contrast irregularity(spot)	diameter spec no of defect a≦0.50mm neglect 0.50＜a≦0.75 5 0.75＜a≦1.00 3 1.00＜a none
8	dot width	design width ±15%
9	color tone and uniformity	obvious uneven color is not permitted

REVISION HISTORY

Revision Content	Page	Date
Drawing format	4	1999/6/29
PDF file		1999/9/7