HANTRONIX

PRODUCT SPECIFICATION

HDA700L

(HIGH BRIGHTNESS VER. - HDA700L-H)

WVGA (800 x 480), TFT COLOR GRAPHICS LCD DISPLAY MODULE

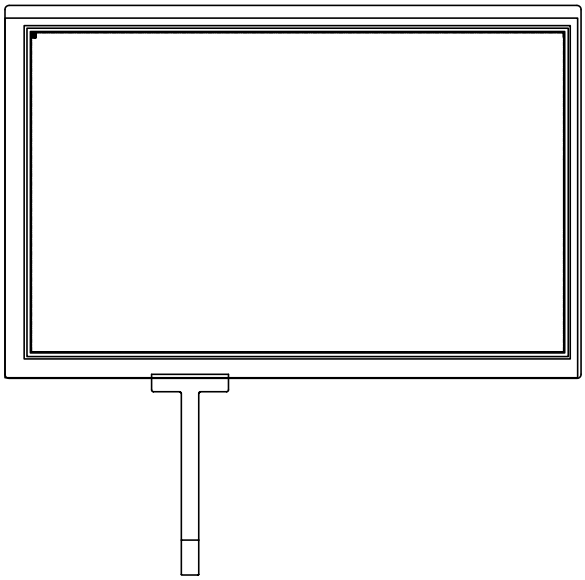

HANTRONIX, INC. 10080 BUBB RD. CUPERTINO, CA 95014	Q.A.: ZW	REV.: 1.0	HDA700L	SHEET 1 OF 17 DATE: 6/08/07

Application

This specification is applied to the 7 inch WVGA supported TFT-LCD module, and can display true 262,144 colors(6 bit/ color). The module is designed for OA, Car TV application and other electronic products which require flat panel display of digital signal interface. This module is composed of a 7"TFT-LCD panel, a driver circuit and backlight unit.

Features

- WVGA (800×480 pixels) resolution.
- Digital 18 bit parallel RGB.
- Dot inversion mode with stripe type.

General Specifications

Item	Specifications	Unit
Screen Size	7 (Diagonal)	inch
Display Format	800RGB(H)×480(V)	dot
Active Area	152.4(H)×91.44(V)	mm
Dot Size	0.0635(H)×0.1905(V)	mm
Pixel Configuration	RGB Vertical Stripe	-
Display Mode	TN Type Transmissive Mode Normally White	-
Surface Treatment	Anti-Glare	-
Viewing Direction	6 O'clock (The Gray Inversion will appear at this direction)	-
Outline Dimension	166.6(W)×107.0(H)×10.0(D)	mm
Weight	(161)	g

7. Absolute Maximum Ratings

7.1 Absolute Ratings of Environment

Item	Symbol	Value		Unit	Note
		Min.	Max.		
Storage Temperature	T_{ST}	-30	+80	°C	(1)
Operating Ambient Temperature	T_{OP}	-20	+70	°C	(1)

Note (1) Temperature and relative humidity range are shown in the figure below.

(a) 85%RH Max. (Ta≦40°C).

(b) Wet-bulb temperature should be 39°C Max. (Ta>40°C).

(c) No condensation.

7.2 Electrical Absolute Ratings

7.2.1 TFT-LCD Module

(Ta=25±2°C, GND=VSS=0V)

Item	Symbol	Value		Unit	Note
		Min.	Max.		
Digital Power Supply Voltage	VCC	-0.3	4.3	V	-

7.2.2 Backlight Unit

(Ta=25±2°C)

Item	Symbol	Value		Unit	Note
		Min.	Max.		
Current of Backlight Unit	I_B	-	250	mA	(1)
Voltage of Backlight Unit	V_B	-	15	V	(1)

Note (1) Permanent damage to the device may occur if maximum values are exceeded or reverse voltage is loaded.

8. Electrical Characteristics (HDA700L)

8.1 TFT-LCD Module

(Ta=25±2°C)

Item	Symbol	Value			Unit	Note
		Min.	Typ.	Max.		
Power Supply Voltage	VCC	3.0	3.3	3.6	V	-
Input High Threshold Voltage	VIH	0.7VCC	-	VCC	V	-
Input Low Threshold Voltage	VIL	0	-	0.3VCC	V	-
Power Consumption	P_L		(TBD)		W	(1)
VSYNC Frequency	F_V	-	60	75	Hz	-
HSYNC Frequency	Fh	-	31.6	39.2	KHz	
DCLK Frequency	DCLK	-	33.3	40	MHz	-

Note (1) The specified power consumption is under the conditions at VCC=3.3V, F_V=60Hz, whereas a power dissipation check pattern below is displayed.

Black Pattern / 0 Gray

Active Area

8.2 Backlight Unit

(Ta=25±2°C)

Item	Symbol	Value			Unit	Note
		Min.	Typ.	Max.		
Current of Backlight Unit	I_B	-	200	-	mA	-
Voltage of Backlight Unit	V_B	-	9.9	-	V	I_B =60mA
Power Consumption	P_{BL}	-	(1.98)	-	W	I_B =60mA
LED Life Time(25℃)		40000	-	-	hr	(1)

Note (1)：The data for LED is for your reference, because LED is consumable component.

Electrical Characteristics (HDA700L-H)
TFT-LCD Module

(Ta=25±2°C)

Item	Symbol	Value			Unit	Note
		Min.	Typ.	Max.		
Power Supply Voltage	VCC	3.0	3.3	3.6	V	-
Power Supply Current	ICC	-	450	585	mA	(1)
Input High Threshold Voltage	VIH	0.7VCC	-	VCC	V	-
Input Low Threshold Voltage	VIL	0	-	0.3VCC	V	-
Power Consumption	P_L	-	1.485	1.931	W	(1)
VSYNC Frequency	F_V	-	60	75	Hz	-
HSYNC Frequency	Fh	-	31.6	39.2	KHz	
DCLK Frequency	DCLK	-	33.3	40	MHz	-

Note (1) The specified power consumption is under the conditions at VCC=3.3V, F_V=60Hz, whereas a power dissipation check pattern below is displayed.

Black Pattern / 0 Gray

Active Area

Backlight Unit

(Ta=25±2°C)

Item	Symbol	Value			Unit	Note
		Min.	Typ.	Max.		
Current of Backlight Unit	I_B	-	200	-	mA	-
Voltage of Backlight Unit	V_B	-	9.9	-	V	I_B =200mA
Power Consumption	P_{BL}	-	(1.98)	-	W	I_B =200mA
LED Life Time(25℃)		40000	-	-	hr	(1)

Note (1) : LED life time is defined as under 25±2°C , when the average brightness decrease to 50% of original brightness

8.3 Transparent Touch panel (HDA700L-T)

Electrical characteristics

Item		Value			Unit	Note
		Min.	Typ.	Max.		
Operating Voltage		-	5	7	V	-
Terminal Resistance	X-direction	300	-	900	Ω	At connector
	Y-direction	200	-	600	Ω	At connector
Insulation Resistance		≧ 10MΩ				At DC25V
Chatting		≦ 20 ms Max				At connector
Linearity		≦1.5%				(1)

Note(1): Measurement condition of Linearity

Difference between actual voltage & Theoretical voltage is an error at any points.

Linearity is the value max. Error voltage divided by voltage difference on active area.

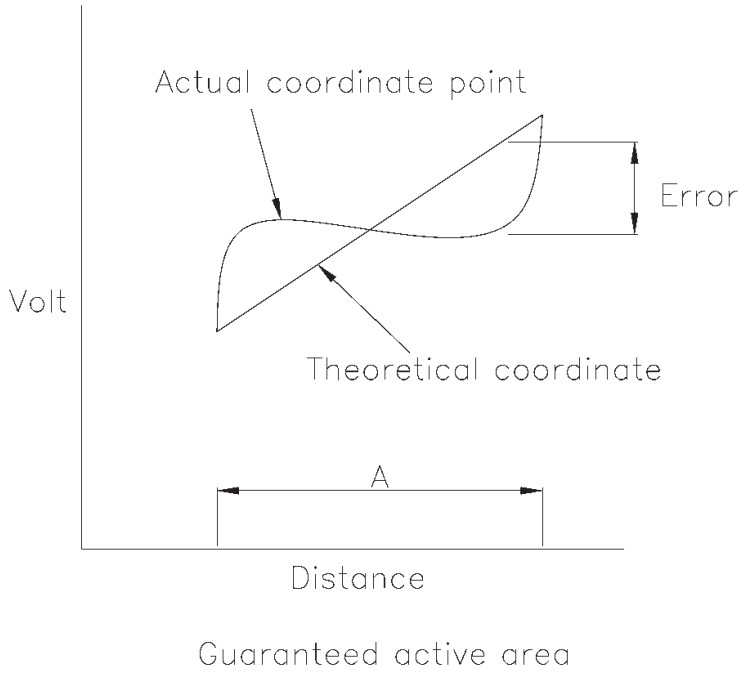

9. Block Diagram

9.1 TFT-LCD Module with Backlight Unit

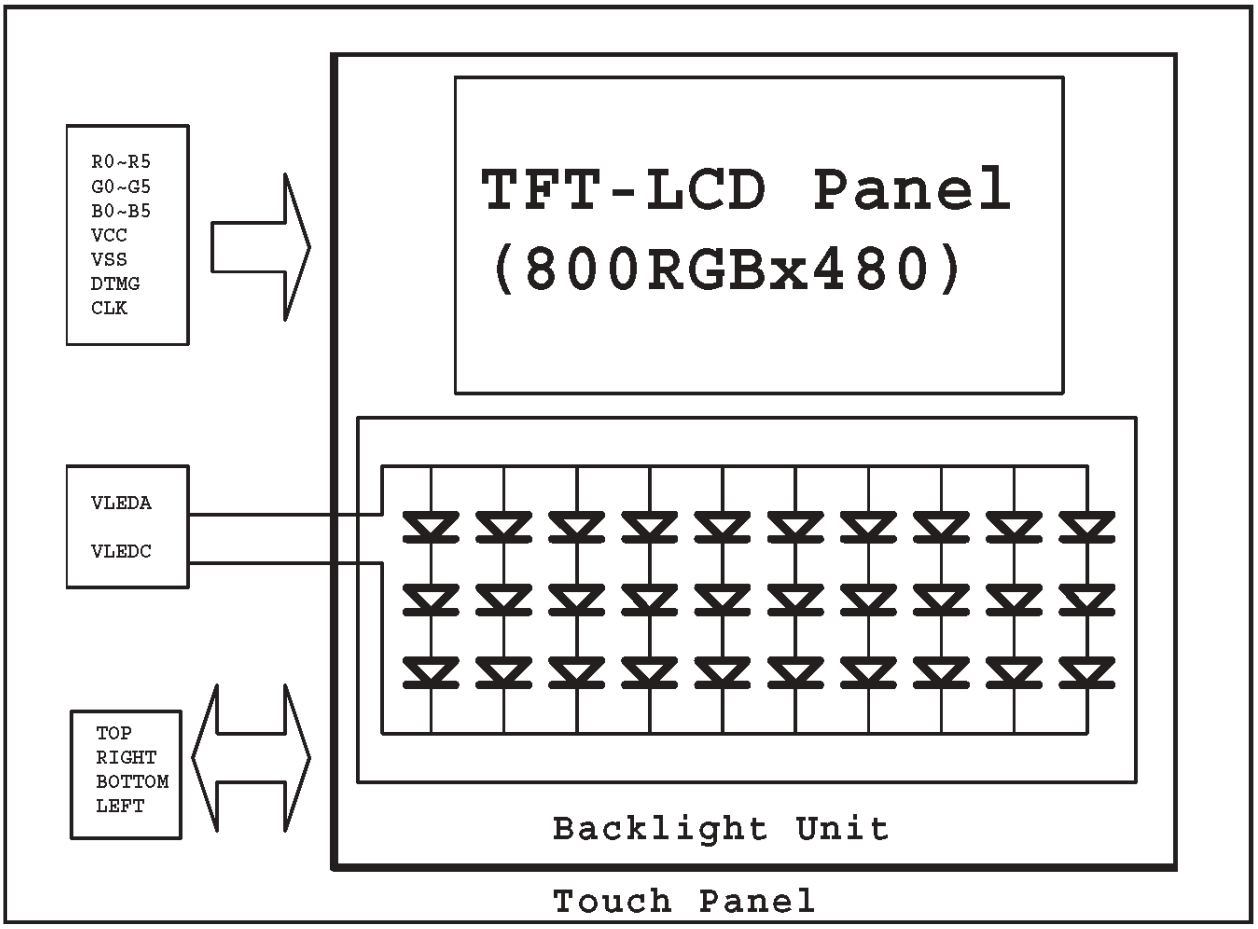

TOUCH PANEL OPTIONAL

10. Input / Output Terminals Pin Assignment

10.1 TFT-LCD Module

Pin No.	Symbol	I/O	Description
1	VCC	I	+3.3V power supply
2	VCC	I	+3.3V power supply
3	VCC	I	+3.3V power supply
4	VCC	I	+3.3V power supply
5	NC	I	No Connect
6	DTMG	I	Display Timing
7	VSS	I	Ground
8	NC	I	No Connect
9	VSS	I	Ground
10	NC	I	No Connect
11	VSS	I	Ground
12	B5	I	Blue data(MSB)
13	B4	I	Blue data
14	B3	I	Blue data
15	VSS	I	Ground
16	B2	I	Blue data
17	B1	I	Blue data
18	B0	I	Blue data(LSB)
19	VSS	I	Ground
20	G5	I	GREEN data(MSB)
21	G4	I	GREEN data
22	G3	I	GREEN data
23	VSS	I	Ground
24	G2	I	GREEN data
25	G1	I	GREEN data
26	G0	I	GREEN data(LSB)
27	VSS	I	Ground
28	R5	I	RED data(MSB)
29	R4	I	RED data
30	R3	I	RED data

Pin No.	Symbol	I/O	Description
31	VSS	I	Ground
32	R2	I	RED data
33	R1	I	RED data
34	R0	I	RED data (LSB)
35	NC	I	No Connect
36	VSS	I	Ground
37	VSS	I	Ground
38	DCLK		Dot Clock
39	VSS	I	Ground
40	VSS	I	Ground

10.2 Backlight Unit

Pin No.	Symbol	I/O	Description	Wire Color
1	VLEDA	I	Backlight LED Anode.	Red
2	VLEDC	I	Backlight LED Cathode.	Black

10.3 Transparent Touch Panel (OPTIONAL - HDA700L-T)

Pin No.	Symbol
1	TOP
2	RIGHT
3	BOTTOM
4	LEFT

10.4 Color Data Input Assignment

The brightness of each primary color(red, green and blue) is based on the 6 bit gray scale data input for the color. The higher the binary input, the brighter the color. The table provides the assignment of color versus data input.

Color		Data Signal																	
		Red						Green						Blue					
		D05	D04	D03	D02	D01	D00	D15	D14	D13	D12	D11	D10	D25	D24	D23	D22	D21	D20
Basic Colors	Black	0	0	0	0	0	0	0	0	0	0	0	0	0	0	0	0	0	0
	Red	1	1	1	1	1	1	0	0	0	0	0	0	0	0	0	0	0	0
	Green	0	0	0	0	0	0	1	1	1	1	1	1	0	0	0	0	0	0
	Blue	0	0	0	0	0	0	0	0	0	0	0	0	1	1	1	1	1	1
	Cyan	0	0	0	0	0	0	1	1	1	1	1	1	1	1	1	1	1	1
	Magenta	1	1	1	1	1	1	0	0	0	0	0	0	1	1	1	1	1	1
	Yellow	1	1	1	1	1	1	1	1	1	1	1	1	0	0	0	0	0	0
	White	1	1	1	1	1	1	1	1	1	1	1	1	1	1	1	1	1	1
Gray Scale Of RED	Red(0) / Dark	0	0	0	0	0	0	0	0	0	0	0	0	0	0	0	0	0	0
	Red(1)	0	0	0	0	0	1	0	0	0	0	0	0	0	0	0	0	0	0
	Red(2)	0	0	0	0	1	0	0	0	0	0	0	0	0	0	0	0	0	0
	:	:	:	:	:	:	:	:	:	:	:	:	:	:	:	:	:	:	:
	:	:	:	:	:	:	:	:	:	:	:	:	:	:	:	:	:	:	:
	Red(61)	1	1	1	1	0	1	0	0	0	0	0	0	0	0	0	0	0	0
	Red(62)	1	1	1	1	1	0	0	0	0	0	0	0	0	0	0	0	0	0
	Red(63)	1	1	1	1	1	1	0	0	0	0	0	0	0	0	0	0	0	0
Gray Scale Of Green	Green(0) / Dark	0	0	0	0	0	0	0	0	0	0	0	0	0	0	0	0	0	0
	Green(1)	0	0	0	0	0	0	0	0	0	0	0	1	0	0	0	0	0	0
	Green(2)	0	0	0	0	0	0	0	0	0	0	1	0	0	0	0	0	0	0
	:	:	:	:	:	:	:	:	:	:	:	:	:	:	:	:	:	:	:
	:	:	:	:	:	:	:	:	:	:	:	:	:	:	:	:	:	:	:
	Green(61)	0	0	0	0	0	0	1	1	1	1	0	1	0	0	0	0	0	0
	Green(62)	0	0	0	0	0	0	1	1	1	1	1	0	0	0	0	0	0	0
	Green(63)	0	0	0	0	0	0	1	1	1	1	1	1	0	0	0	0	0	0
Gray Scale Of Blue	Blue(0) / Dark	0	0	0	0	0	0	0	0	0	0	0	0	0	0	0	0	0	0
	Blue(1)	0	0	0	0	0	0	0	0	0	0	0	0	0	0	0	0	0	1
	Blue(2)	0	0	0	0	0	0	0	0	0	0	0	0	0	0	0	0	1	0
	:	:	:	:	:	:	:	:	:	:	:	:	:	:	:	:	:	:	:
	:	:	:	:	:	:	:	:	:	:	:	:	:	:	:	:	:	:	:
	Blue(61)	0	0	0	0	0	0	0	0	0	0	0	0	1	1	1	1	0	1
	Blue(62)	0	0	0	0	0	0	0	0	0	0	0	0	1	1	1	1	1	0
	Blue(63)	0	0	0	0	0	0	0	0	0	0	0	0	1	1	1	1	1	1

11. Interface Timing

11.1 Input Signal Characteristics

RESOLUTION :(800x480)

Item		Symbol	Min.	Typ.	Max.	Unit
DCLK	Period	t_{CLK}	25.0	37.0	50.0	ns
	Frequency	f_{CLK}	20.0	27.0	40.0	MHz
	Low Level Width	t_{WCL}	8	-	-	ns
	High Level Width	t_{WCH}	8	-	-	ns
	Rise, Fall Time	t_{CLKr}, t_{CLKf}	-	-	3	ns
	Duty(1)	-	0.45	0.50	0.55	-
DE (Data Enable)	Setup Time	t_{DES}	5	-	-	ns
	Hold Time	t_{DEH}	10	-	-	ns
	Rise, Fall Time	t_{DEr}, t_{DEf}	-	-	16	ns
	Horizontal Period	t_{HP}	832	900	1054	t_{CLK}
	Horizontal Valid	t_{HV}	800	800	800	t_{CLK}
	Horizontal Blank	t_{HBK}	32	100	254	t_{CLK}
	Vertical Period	t_{VP}	481	513	1023	t_{HP}
	Vertical Valid	t_{W}	480	480	480	t_{HP}
	Vertical Blank	t_{VBK}	1	33	543	t_{HP}
Data	Setup Time	t_{DS}	5	-	-	ns
	Hold Time	t_{DH}	10	-	-	ns
	Rise, Fall Time	t_{Dr},t_{Df}	-	-	3	ns

Note: (1) t_{CLKl} / t_{CLK}.

11.2 Waveform

11.2.1 De mode input waveforms

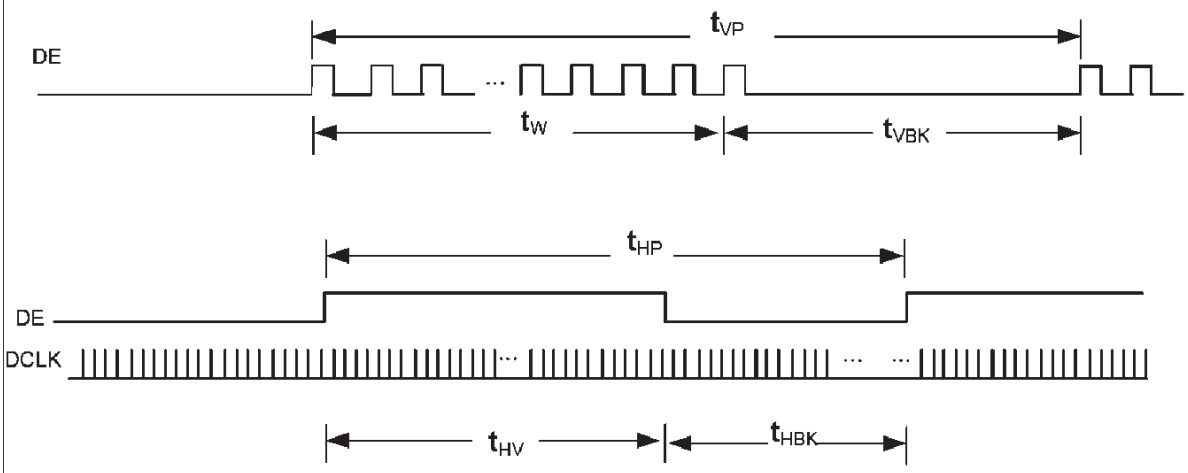

11.2.2 DE and RGB input data timing waveform

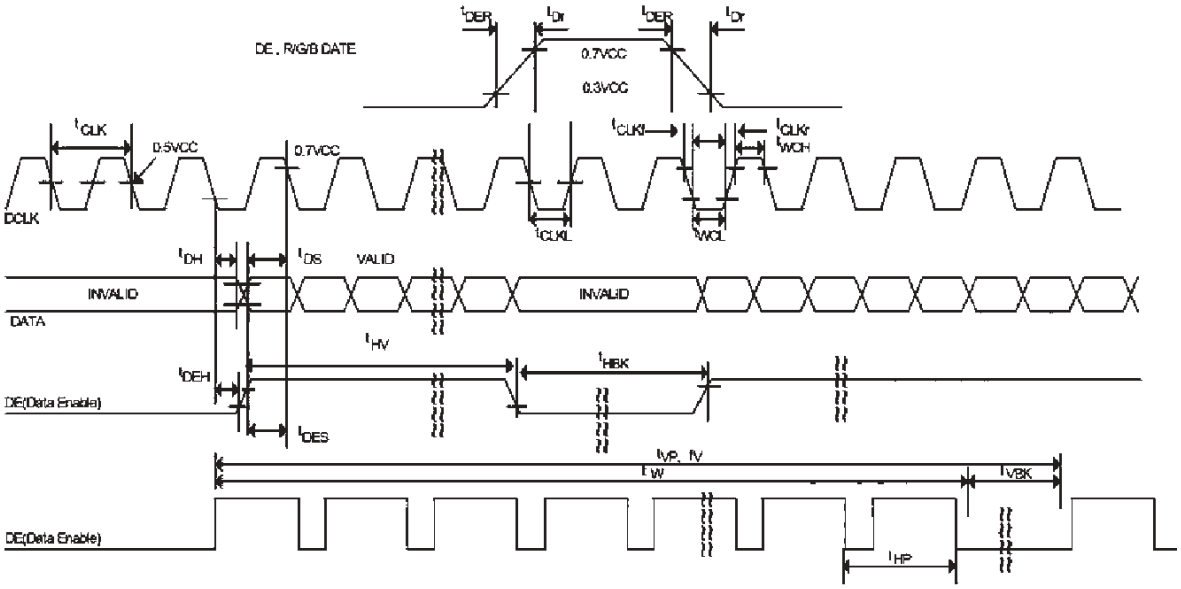

HANTRONIX, INC. 10080 BUBB RD. CUPERTINO, CA 95014	Q.A.: Z.W.	REV.: 1.0	HDA700L	SHEET 11 OF 17 DATE: 6/08/07

Optical Characteristics (HDA700L)

The optical characteristics should be measured in a dark environment (≦ 1 lux) or equivalent state with the methods shown in Note (4).

Item		Symbol	Conditions	Min.	Typ.	Max.	Unit	Note
Contrast Ratio		CR	$\theta_x=0°$, $\theta_Y=0°$ Viewing Normal Angle	150	(250)	-	-	(2)
Response Time		T_R		-	5	10	ms	(3)
		T_F		-	15	20	ms	
Luminance(Center)		Y		300	(350)	-	cd/m^2	(4)
Brightness uniformity		BUNI		70	(75)	-	%	(5)
Color Chromaticity	Red	Rx		(0.527)	(0.577)	(0.627)	-	(1),(4)
		Ry		(0.311)	(0.361)	(0.411)	-	
	Green	Gx		(0.270)	(0.320)	(0.370)	-	
		Gy		(0.504)	(0.554)	(0.604)	-	
	Blue	Bx		(0.092)	(0.142)	(0.192)	-	
		By		(0.046)	(0.096)	(0.146)	-	
	White	Wx		(0.245)	(0.295)	(0.345)	-	
		Wy		(0.287)	(0.337)	(0.387)	-	
Viewing Angle	Horizontal	θ_x+	CR≥10	55	(65)	-	deg.	
		θ_x-		55	(65)	-		
	Vertical	θ_Y+		45	(55)	-		
		θ_Y-		55	(65)	-		

Optical Characteristics (High Brightness version - HDA700L-H)

The optical characteristics should be measured in a dark environment (≤ 1 lux) or equivalent state with the methods shown in Note (4).

Item		Symbol	Conditions	Min.	Typ.	Max.	Unit	Note
Contrast Ratio		CR	$\theta_x=0°$, $\theta_Y=0°$ Viewing Normal wAngle	150	(250)	-	-	(2)
Response Time		T_R		-	5	10	ms	(3)
		T_F		-	15	20	ms	
Luminance(Center)		Y		450	(500)	-	cd/m^2	(4)
Brightness uniformity		BUNI		70	(75)	-	%	(5)
Color Chromaticity	Red	Rx		(0.537)	(0.587)	(0.637)	-	(1),(4)
		Ry		(0.298)	(0.348)	(0.398)	-	
	Green	Gx		(0.285)	(0.335)	(0.385)	-	
		Gy		(0.492)	(0.542)	(0.592)	-	
	Blue	Bx		(0.090)	(0.140)	(0.190)	-	
		By		(0.078)	(0.128)	(0.178)	-	
	White	Wx		(0.274)	(0.324)	(0.374)	-	
		Wy		(0.218)	(0.368)	(0.418)	-	
Viewing Angle	Horizontal	θ_x+	CR≥10	55	(65)	-	deg.	
		θ_x-		55	(65)	-		
	Vertical	θ_Y+		45	(55)	-		
		θ_Y-		55	(65)	-		

Note (1) Definition of Viewing Angle (θx, θy):

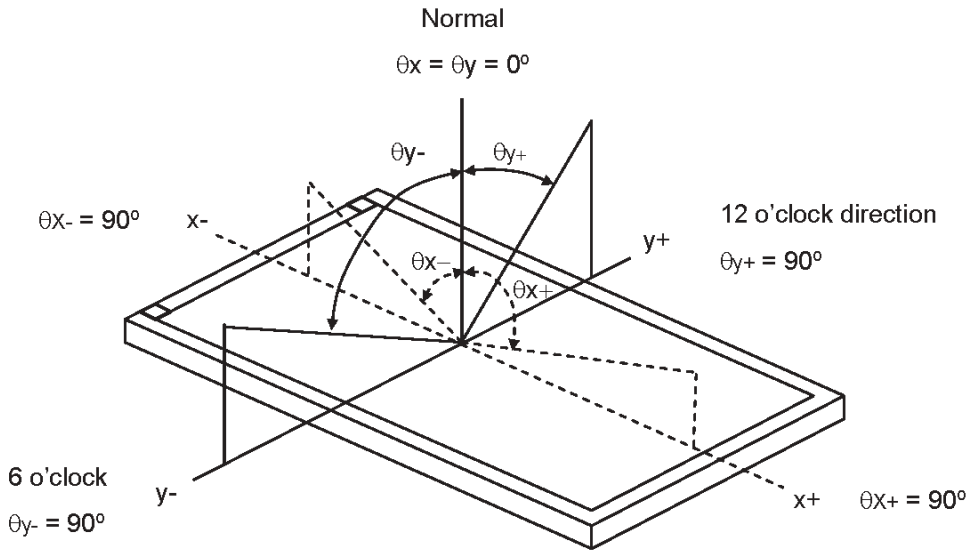

Note (2) Definition of Contrast Ratio (CR):

Measured at the center point of panel

Contrast Ratio (CR) = L255 / L0

L255: Luminance of gray level 255

L 0: Luminance of gray level 0.

Note (3) Definition of Response Time (T_R, T_F):

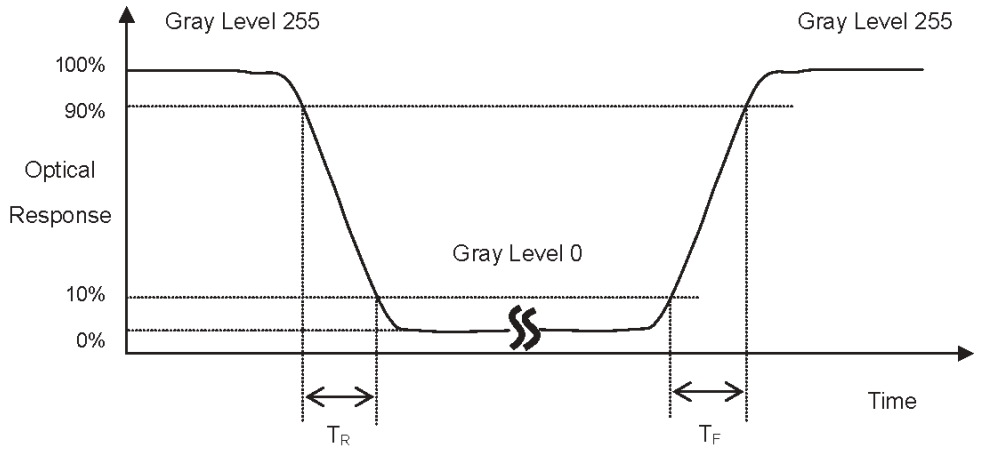

HANTRONIX, INC. 10080 BUBB RD. CUPERTINO, CA 95014	Q.A.: Z.W.	REV.: 1.0	HDA700L	SHEET 13 OF 17 DATE: 6/08/07

Note (4) Measurement Set-Up:

The LCD module should be stabilized at a given temperature for 30 minutes to avoid abrupt temperature change during measuring. In order to stabilize the luminance, the measurement should be executed after lighting Backlight for 30 minutes in a windless room.

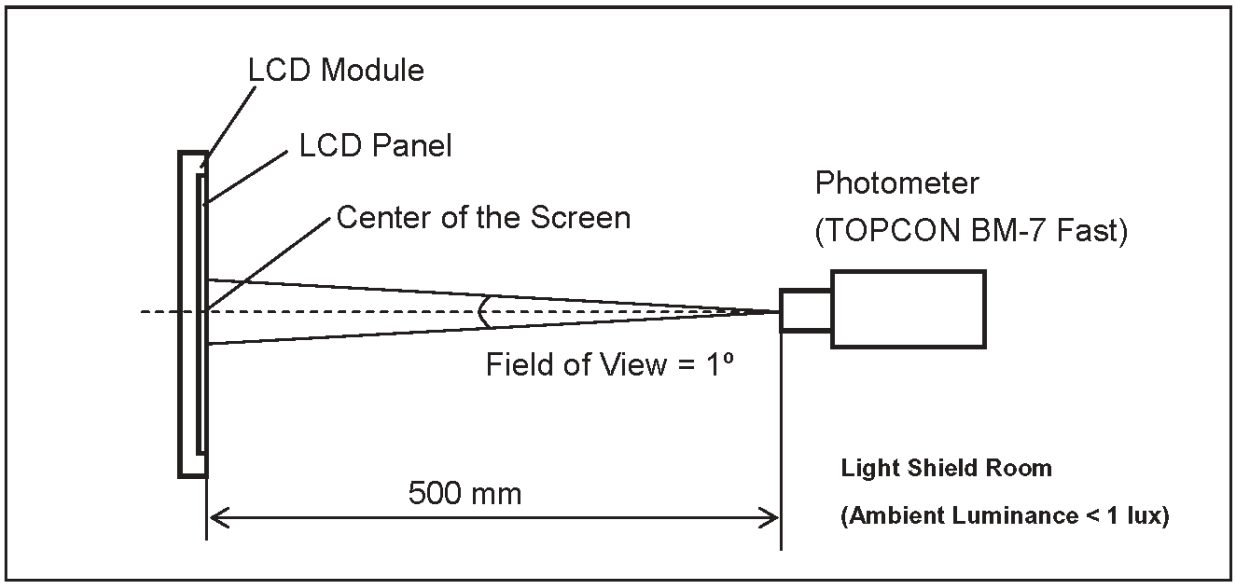

Note (5) Definition of brightness uniformity

Brightness uniformity=(Min Luminance of 9 points)/(Max Luminance of 9 points)×100%

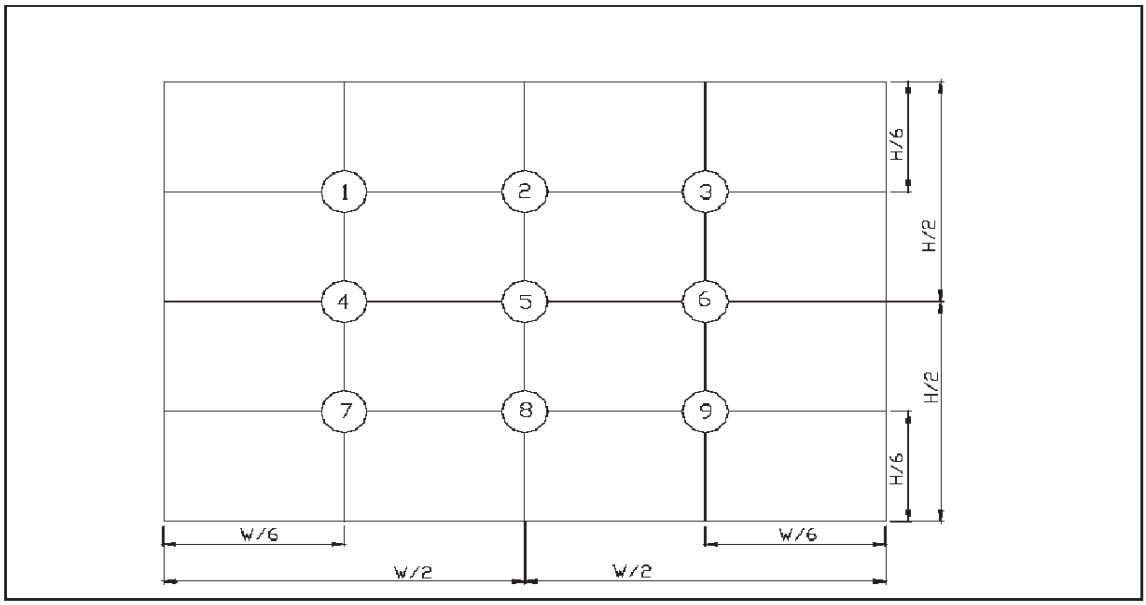

: mm

HANTRONIX, INC. 10080 BUBB RD. CUPERTINO, CA 95014	Q.A.: Z.W.	REV.: 1.0	HDA700L	SHEET 14 OF 17 DATE: 6/08/07

13. Reliability Test

No.	Test Items	Test Condition	Remark
1	High Temperature Storage Test	T_a= 80℃ 240 hours	-
2	Low Temperature Storage Test	T_a= -30℃ 240 hours	-
3	High Temperature Operation Test	T_a= 70℃ 240 hours	-
4	Low Temperature Operation Test	T_a= -20℃ 240 hours	-
5	High Temperature and High Humidity Operation Test	T_a=60℃ 90%RH 240 hours	-
6	Electro Static Discharge Test (non-operating)	-Panel Surface/Top Case : 150pF, 330Ω Air: ±15kV, Contact: ±8kV	-
7	Mechanical Shock Test (non-operating)	Half sine wave, 80G, 11ms 3 times shock of each six surfaces	-
8	Vibration Test (non-operating)	Sine wave, 10 ~ 55 ~ 10Hz, 3 axis, 2 hours/axis	-
9	Thermal Shock Test	-20℃(1h) ~ 70℃, 200 cycles, 30min 30min	-
10	Drop Test(with Carton)	Height: 80cm 1 corner, 3 edges, 6 surfaces	-

NO TOUCH SCREEN OPTION (HDA700L / 700L-H)

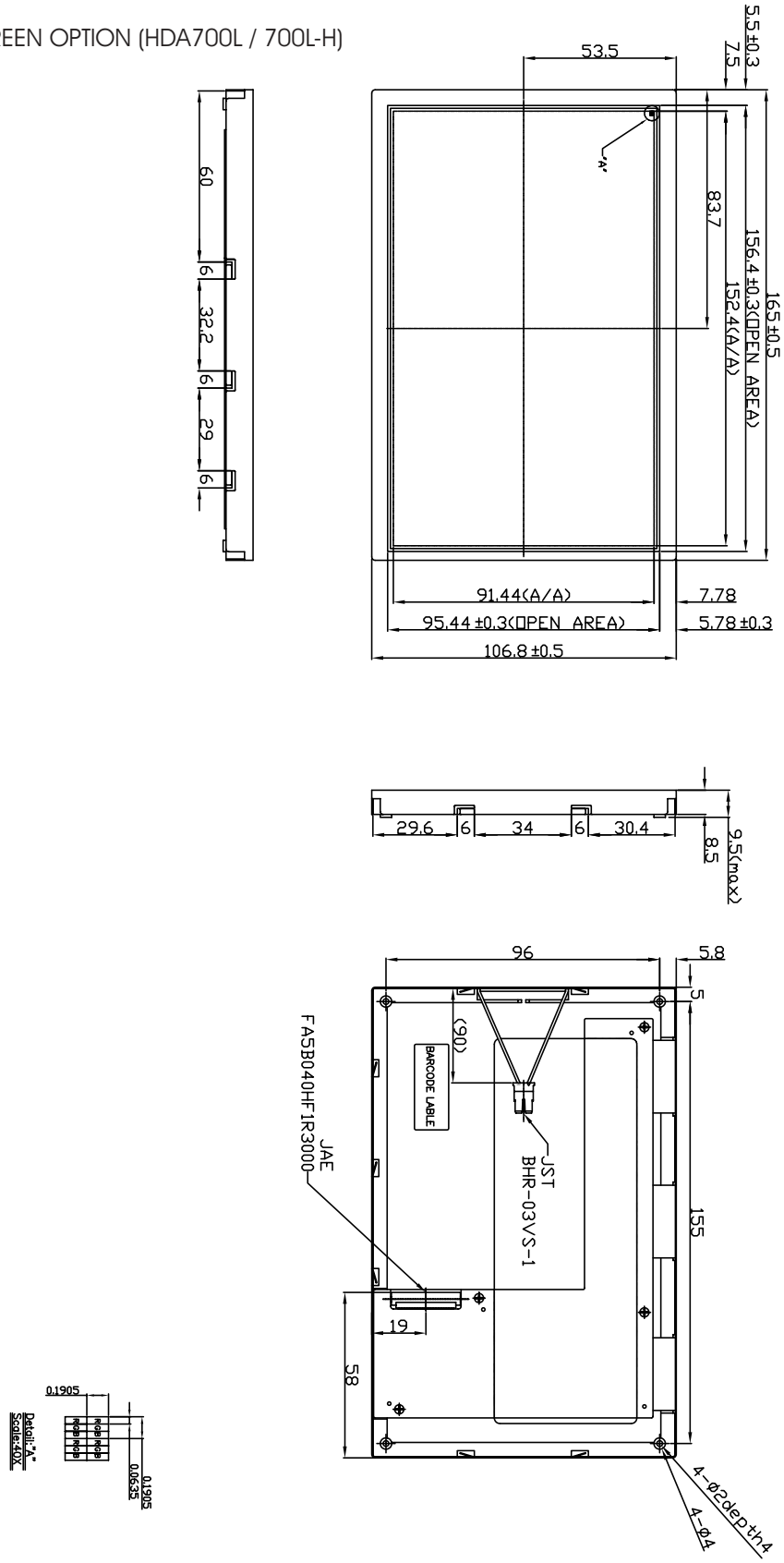

HANTRONIX, INC. 10080 BUBB RD. CUPERTINO, CA 95014	Q.A.: Z.W.	REV.: 1.0	HDA700L	SHEET 16 OF 17 DATE: 6/08/07

TOUCH SCREEN OPTION - HDA700L-7

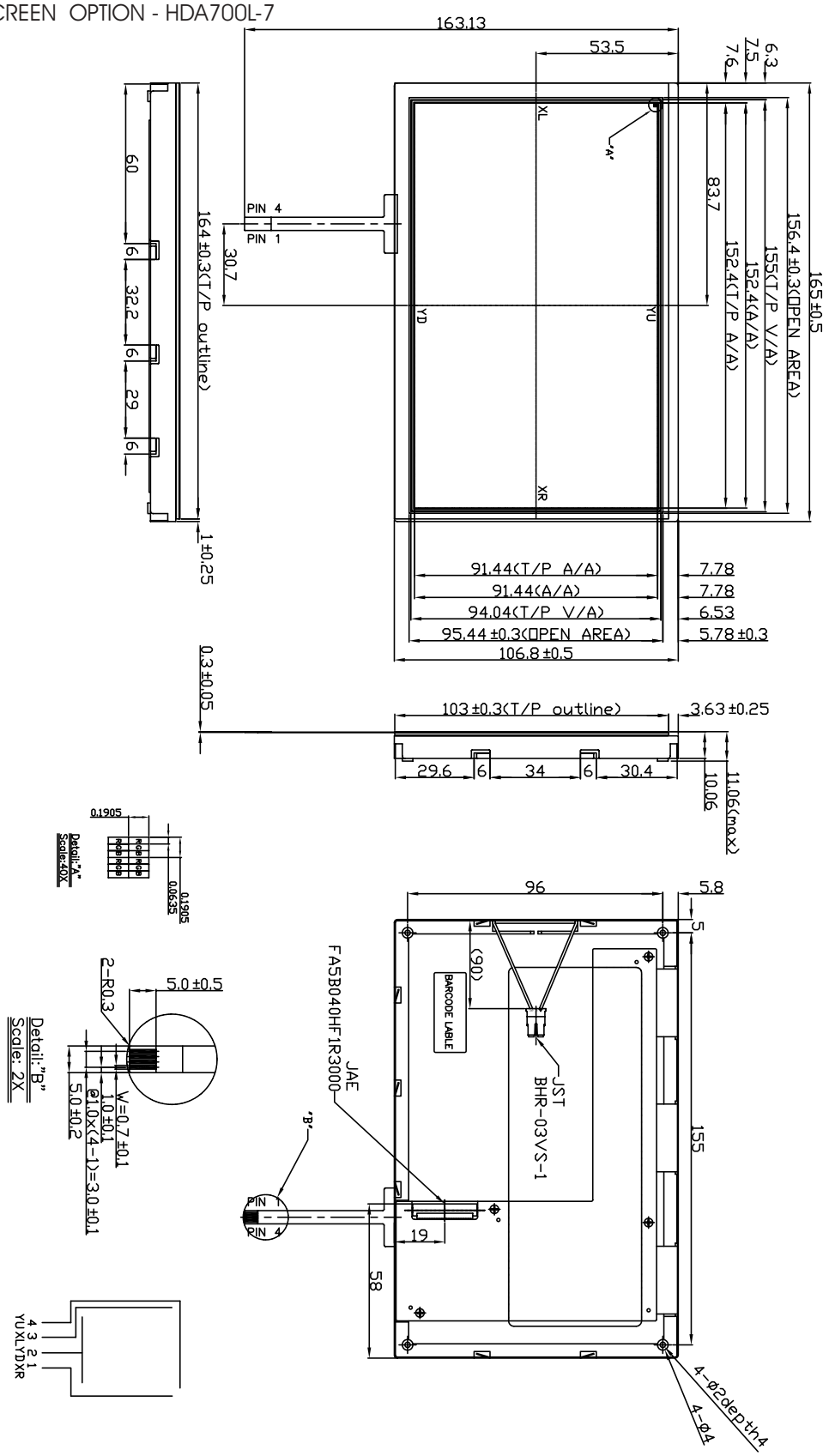

HANTRONIX, INC. 10080 BUBB RD. CUPERTINO, CA 95014	Q.A.: Z.W.	REV.: 1.0	HDA700L	SHEET 17 OF 17 DATE: 6/08/07