Active Miller Clamp

Products with Feature: ACPL-331J, ACPL-332J

Application Note 5314

Introduction

This application note covers the parasitic turn-on effect due to Miller capacitor and how it is mitigated using Active Miller Clamp technique.

One of the common problems faced when operating an IGBT is parasitic turn-on due to Miller capacitor. This effect is noticeable in 0 to +15V type gate driver (single supply driver). Due to this gate-collector coupling, a high dV/dt transient created during IGBT turn-off can induce parasitic turn-on (Gate voltage spike) which is potentially dangerous (Figure 1).

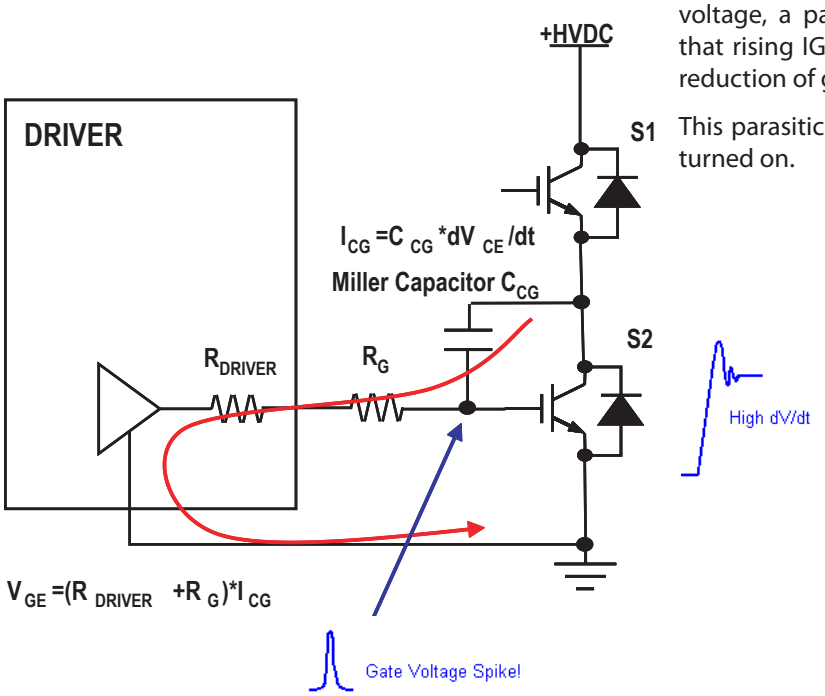

Figure 1. Bottom IGBT Parasitic Turn-On due to Miller Capacitor

Parasitic Turn-on via Miller Capacitor:

When turning on the upper IGBT, S1 in a half-bridge, a voltage change dV_{CE}/dt occurs across the lower IGBT, S2. A current flows through the parasitic Miller capacitor C_{CG} of S1, the gate resistor R_{GATE} and internal gate resistor, R_{DRIVER}. Figure 1 shows the current flow through the capacitor. This current value can be approximated by the following formula:

$$I_{CG} = C_{CG} \frac{dV_{CE}}{dt} \qquad (1)$$

This current creates a voltage drop across the gate resistor. If this voltage exceeds the IGBT gate threshold voltage, a parasitic turn-on occurs. It should be noted that rising IGBT chip temperature would lead to a slight reduction of gate threshold voltage.

This parasitic turn-on can also be seen on S1 when S2 is turned on.

There are two classical solution to the above problem; the first being to add a capacitor between gate and emitter (Figure 2). The second solution is to use negative gate drive (Figure 3).

Additional gate emitter capacitor to shunt the Miller current: The additional capacitor C_G between gate and emitter will influence the switching behavior of the IGBT. C_G is to take up additional charge originating from the Miller capacitance. Due to the fact that the total input capacitance of the IGBT is $C_G||C_{CG}$, the gate charge necessary to reach the threshold voltage is increased (Figure 2).

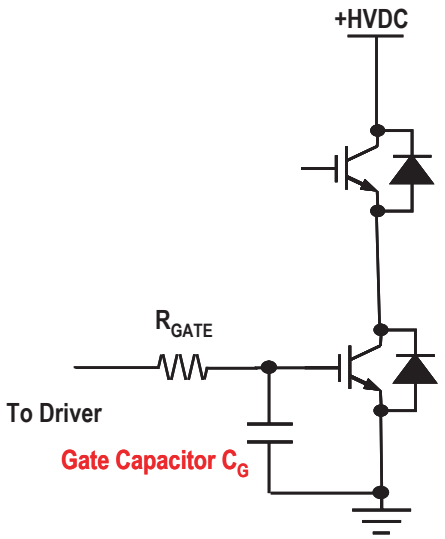

Figure 2. Additional capacitor between gate and emitter

Also due to the additional capacitor, the required driver power is increased and the IGBT shows higher switching losses for the same R_{GATE}.

Negative Power Supply to Increase Threshold Voltage: The usage of negative gate voltage to safely turn-off and block IGBT is typically used in application with nominal current above 100A. Due to cost, negative gate voltage is often not utilized in IGBT application below 100A. Figure 3 shows a typical circuit using negative supply voltage.

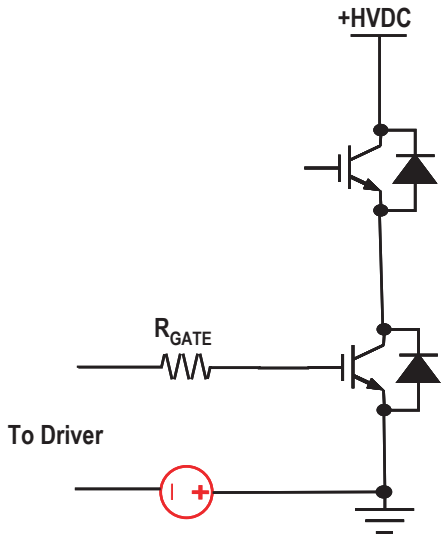

Figure 3. Negative Supply Voltage

Active Miller Clamp Solution

To avoid both efficiency loss due to CG and additional cost for negative supply voltage, another measure to prevent the unwanted IGBT turn-on is proposed by shorting the gate to emitter path. This can be achieved by an additional transistor between gate and emitter. This 'switch' shorts the gate-emitter region after a threshold is reached. The occurring currents across the Miller capacitance are shunted by the transistor instead of flowing through the output driver pin, Vout (Pin 11). This technique is called Active Miller Clamp.

Figure 4 shows ACPL-332J internal block diagram.

How it works: During turn-off, the gate voltage is monitored and clamp output is activated when the gate voltage goes below 2V (relative to V_{EE}). The clamp voltage is typically V_{OL} + 2.5V for a Miller current up to 1100mA.

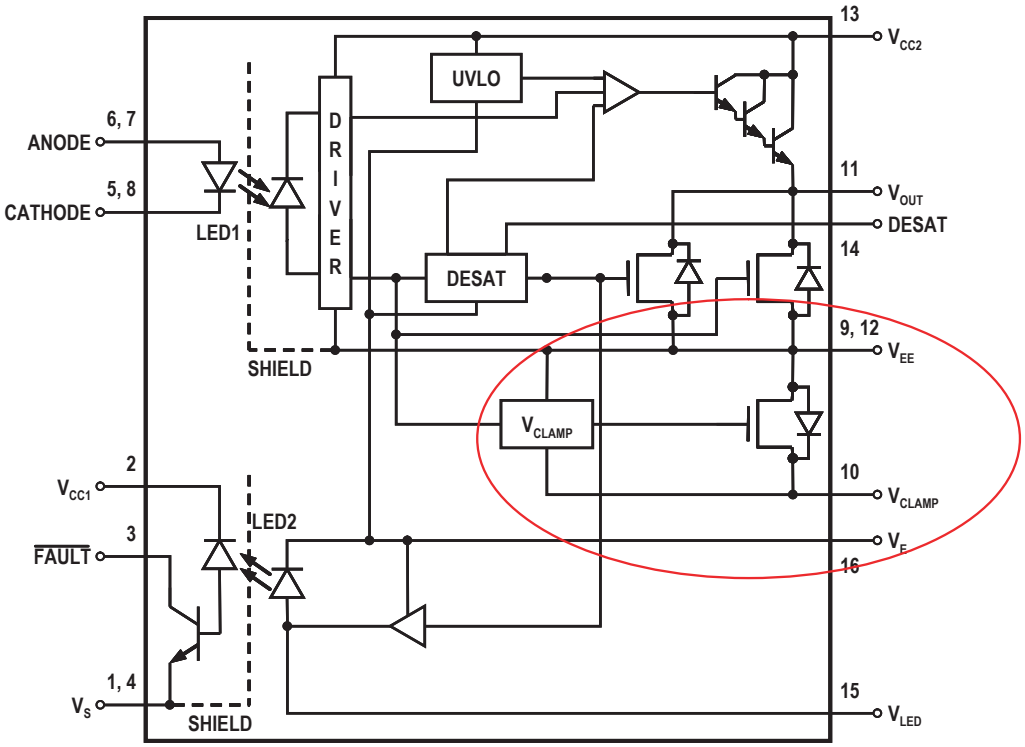

Figure 4. ACPL-332J block diagram; Active Miller Clamp feature circled in red

Figure 5 to 7 show possible application circuits using our Active Miller Clamp.

Application Note: If Active Clamp is not used, connect V_{CLAMP} to V_{EE}

Figure 5 is the recommended circuit for gate driver design with Miller Clamp (V_{CLAMP} pin).

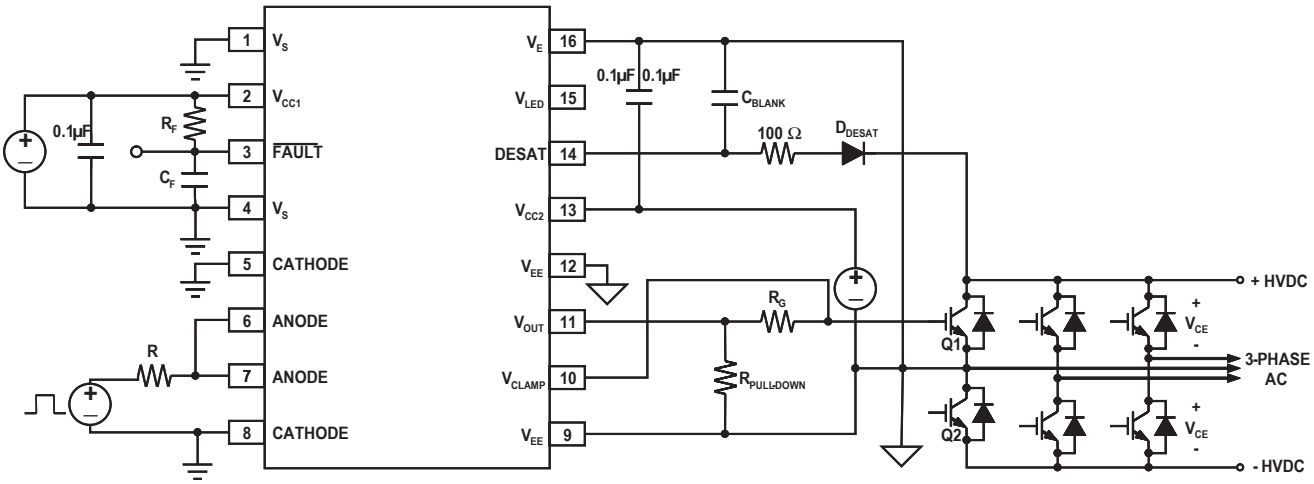

Figure 5. IGBT driver with single power supply, desaturation detection and Active Miller Clamp

Figure 6 shows the driver circuit using negative gate driver for high power application. In such circumstances, the Miller clamp feature would not be required and hence Pin 10 is connected to pin 9, V_{EE}.

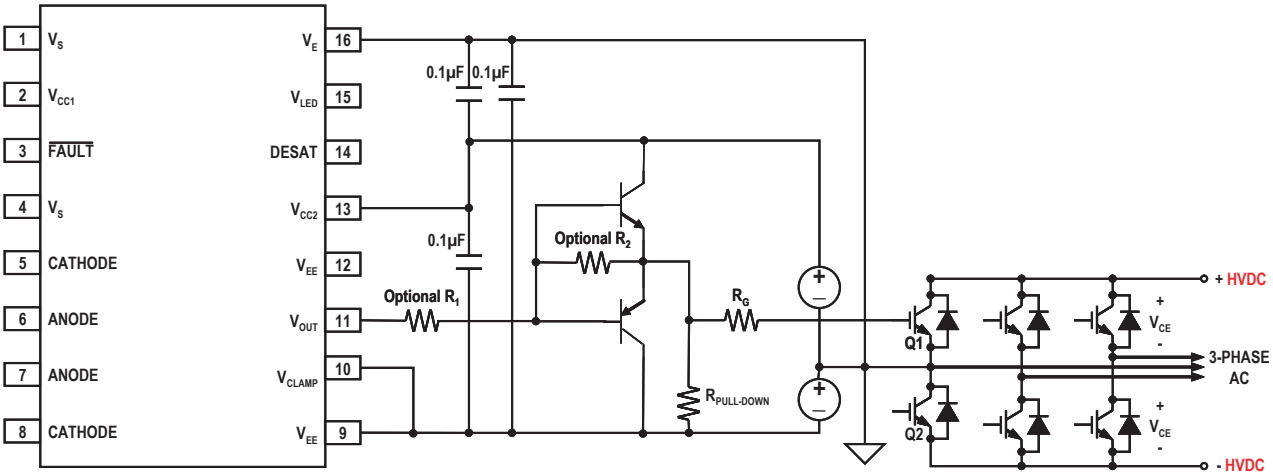

Figure 6. IGBT driver with negative gate drive for high power application

Figures 7a and 7b show a dual power supply with external buffer configuration. The external buffer stage is required when the IGBT gate current requirement goes beyond the driver IC. Miller Clamp function is normally not used when negative voltage supply is provided. However, there are two possible circuit configuration using the clamp pin:

1. Use clamp pin as a secondary gate discharge path (Figure 7a)
2. Use clamp pin to control an additional PNP transistor to sink current. Connecting the Clamp DIRECTLY to the IGBT gate is not advisable for high power IGBT application as the internal clamp MOSFET is only rated up to 1.5A. (Figure 7b)

The Clamp threshold voltage is relative to V_{EE} voltage. If V_{EE} is 0V, the clamp threshold is 2V. In the case if V_{EE} is -5V, then the clamp threshold is -3V (threshold is 2V relative to the V_{EE} voltage)

For Figure 7, optional resistor R1 may be added to reduce the current drawn from the driver. This will lead to increase turn-on/off time of the IGBT. If not required, R1 should be shorted. Optional resistor R2 can be added to allow both driver and buffer to provide current to the IGBT. R2 can be open circuited to prevent current being drawn from driver to the IGBT.

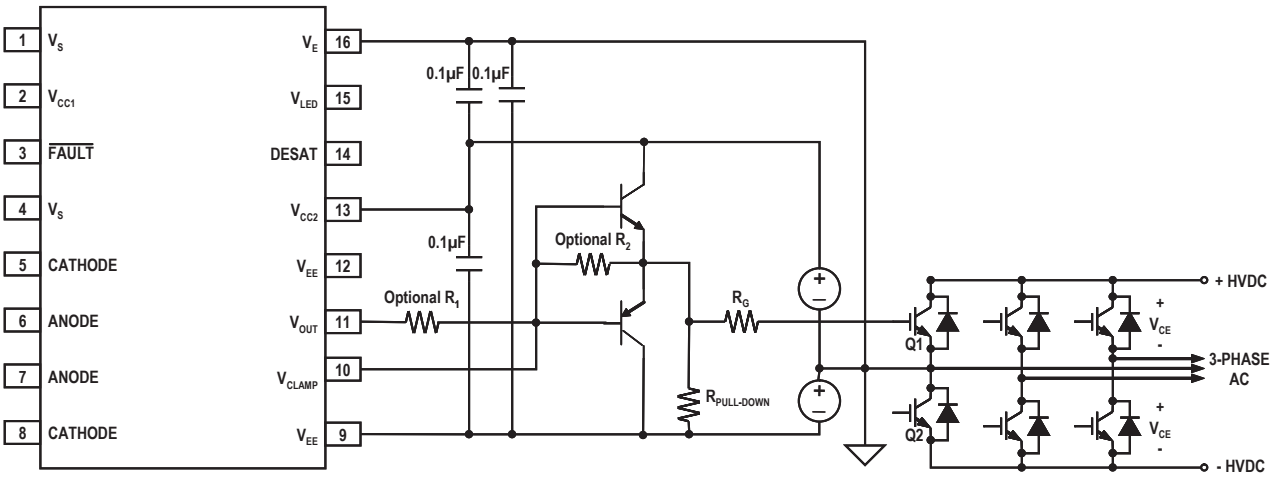

Figure 7a. Large IGBT driver with negative gate drive, external buffer for high current and Active Clamp as secondary gate discharge

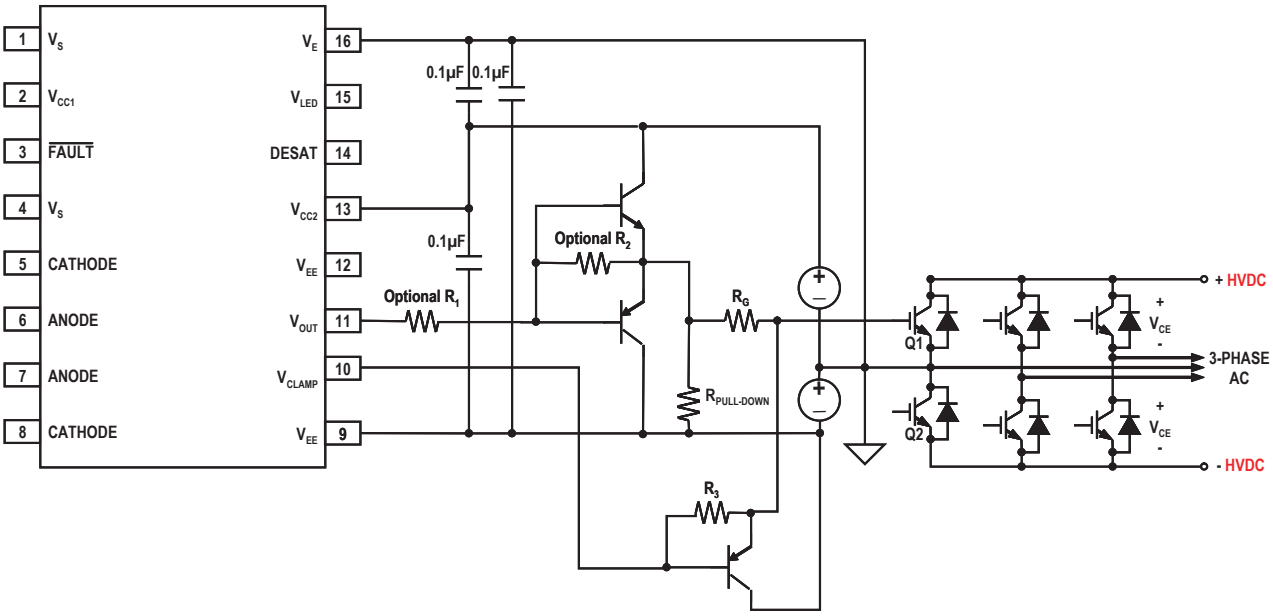

Figure 7b. Large IGBT Gate drive with negative gate drive, external buffer for high current and Active Clamp to control secondary discharge path for high power application

Conclusion

Avago Technologies Gate Optocouplers provide Miller Clamp function which controls the Miller current during high dV/dt situation and keep the IGBT totally off. It provides cost savings by eliminating the use of a negative supply voltage and additional capacitors that reduces driver efficiency in various applications.

For product information and a complete list of distributors, please go to our web site: **www.avagotech.com**

Avago, Avago Technologies, and the A logo are trademarks of Avago Technologies, Limited in the United States and other countries.
Data subject to change. Copyright © 2008 Avago Technologies Limited. All rights reserved.
AV02-0072EN - January 28, 2008