BLM8G0710S-30PB; BLM8G0710S-30PBG

LDMOS 2-stage power MMIC

Rev. 1 — 23 January 2015 Product data sheet

1. Product profile

1.1 General description

The BLM8G0710S-30PB(G) is a dual section, 2-stage power MMIC using NXP's state of the art GEN8 LDMOS technology. This multiband device is perfectly suited as general purpose driver or small cell final in the frequency range from 700 MHz to 1000 MHz. Available in gull wing or straight lead outline.

Table 1. Performance

Typical RF performance at T_{case} = 25 °C; I_{Dq1} = 30 mA; I_{Dq2} = 120 mA.
Test signal: 3GPP test model 1; 64 DPCH; PAR = 9.9 dB at 0.01% probability on CCDF; per section unless otherwise specified in a class-AB production circuit.

Test signal	f	V_{DS}	$P_{L(AV)}$	G_p	η_D	$ACPR_{5M}$
	(MHz)	(V)	(W)	(dB)	(%)	(dBc)
single carrier W-CDMA	957.5	28	3	35	27	–41.5

1.2 Features and benefits

- Designed for broadband operation (frequency 700 MHz to 1000 MHz)
- High section-to-section isolation enabling multiple combinations
- Integrated temperature compensated bias
- Biasing of individual stages is externally accessible
- Integrated ESD protection
- Excellent thermal stability
- High power gain
- On-chip matching for ease of use
- Compliant to Directive 2002/95/EC, regarding restriction of hazardous substances (RoHS)

1.3 Applications

- RF power MMIC for W-CDMA base stations in the 700 MHz to 1000 MHz frequency range. Possible circuit topologies are the following as also depicted in Section 8.1:
  - Dual section or single ended
  - Doherty
  - Quadrature combined
  - Push-pull

2. Pinning information

2.1 Pinning

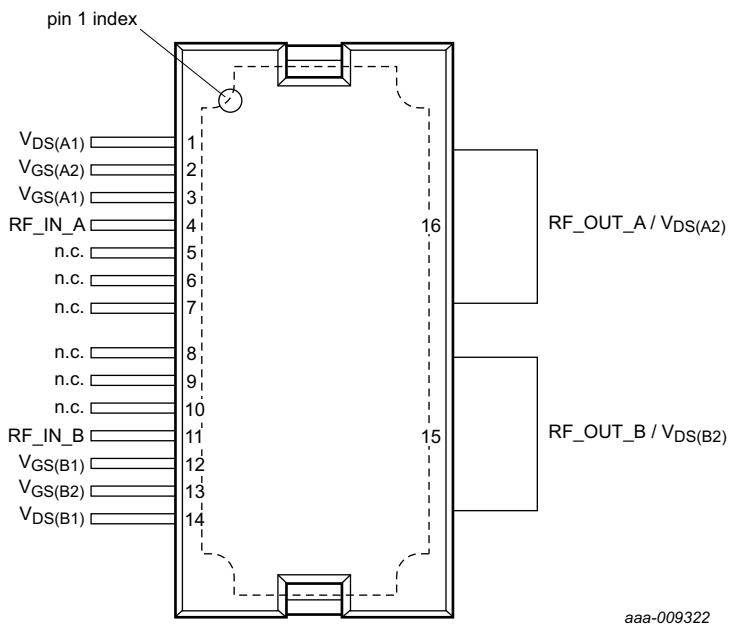

Transparent top view

The exposed backside of the package is the ground terminal of the device.

Fig 1. Pin configuration

2.2 Pin description

Table 2. Pin description

Symbol	Pin	Description
$V_{DS(A1)}$	1	drain-source voltage of driver stage A1
$V_{GS(A2)}$	2	gate-source voltage of final stage A2
$V_{GS(A1)}$	3	gate-source voltage of driver stage A1
RF_IN_A	4	RF input section A
n.c.	5	not connected
n.c.	6	not connected
n.c.	7	not connected
n.c.	8	not connected
n.c.	9	not connected
n.c.	10	not connected
RF_IN_B	11	RF input section B
$V_{GS(B1)}$	12	gate-source voltage of driver stage B1
$V_{GS(B2)}$	13	gate-source voltage of final stage B2
$V_{DS(B1)}$	14	drain-source voltage of driver stage B1

All information provided in this document is subject to legal disclaimers.

© NXP Semiconductors N.V. 2015. All rights reserved.

Table 2. Pin description *...continued*

Symbol	Pin	Description
RF_OUT_B/$V_{DS(B2)}$	15	RF output section B / drain-source voltage of final stage B2
RF_OUT_A/$V_{DS(A2)}$	16	RF output section A / drain-source voltage of final stage A2
GND	flange	RF ground

3. Ordering information

Table 3. Ordering information

Type number	Package		
	Name	Description	Version
BLM8G0710S-30PB	HSOP16F	plastic, heatsink small outline package; 16 leads (flat)	SOT1211-1
BLM8G0710S-30PBG	HSOP16	plastic, heatsink small outline package; 16 leads	SOT1212-1

4. Block diagram

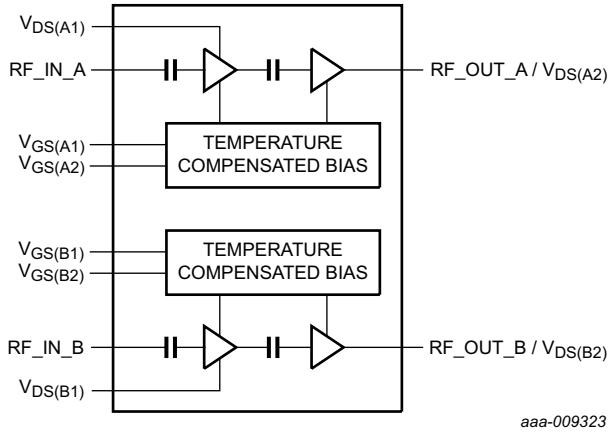

Fig 2. Block diagram

5. Limiting values

Table 4. Limiting values

In accordance with the Absolute Maximum Rating System (IEC 60134).

Symbol	Parameter	Conditions	Min	Max	Unit
V_{DS}	drain-source voltage		-	65	V
V_{GS}	gate-source voltage		–0.5	+13	V
T_{stg}	storage temperature		–65	+150	°C
T_j	junction temperature	[1]	-	225	°C
T_{case}	case temperature		-	150	°C

[1] Continuous use at maximum temperature will affect the reliability. For details refer to the online MTF calculator.

All information provided in this document is subject to legal disclaimers.

© NXP Semiconductors N.V. 2015. All rights reserved.

6. Thermal characteristics

Table 5. Thermal characteristics

Measured for total device.

Symbol	Parameter	Conditions		Value	Unit
$R_{th(j-c)}$	thermal resistance from junction to case	final stage; T_{case} = 90 °C; P_L = 2.52 W	[1]	1.5	K/W
		driver stage; T_{case} = 90 °C; P_L = 2.52 W	[1]	5.3	K/W

[1] When operated with a CW signal.

7. Characteristics

Table 6. DC characteristics

T_{case} = 25 °C; per section unless otherwise specified.

Symbol	Parameter	Conditions		Min	Typ	Max	Unit
Final stage							
$V_{(BR)DSS}$	drain-source breakdown voltage	V_{GS} = 0 V; I_D = 0.241 mA		65	-	-	V
V_{GSq}	gate-source quiescent voltage	V_{DS} = 28 V; I_D = 120 mA		1.5	2	2.7	V
		V_{DS} = 28 V; I_D = 120 mA	[1]	1.9	2.6	3.5	V
I_{DSS}	drain leakage current	V_{GS} = 0 V; V_{DS} = 28 V		-	-	1.4	μA
I_{DSX}	drain cut-off current	V_{GS} = 5.65 V; V_{DS} = 10 V		-	4.4	-	A
I_{GSS}	gate leakage current	V_{GS} = 1.0 V; V_{DS} = 0 V		-	-	140	nA
Driver stage							
$V_{(BR)DSS}$	drain-source breakdown voltage	V_{GS} = 0 V; I_D = 0.06 mA		65	-	-	V
V_{GSq}	gate-source quiescent voltage	V_{DS} = 28 V; I_D = 30 mA		1.5	2.1	2.7	V
		V_{DS} = 28 V; I_D = 30 mA	[2]	1.9	2.6	3.5	V
I_{DSS}	drain leakage current	V_{GS} = 0 V; V_{DS} = 28 V		-	-	1.4	μA
I_{DSX}	drain cut-off current	V_{GS} = 5.65 V; V_{DS} = 10 V		-	1.1	-	A
I_{GSS}	gate leakage current	V_{GS} = 1.0 V; V_{DS} = 0 V		-	-	140	nA

[1] In production circuit with 1.3 kΩ gate feed resistor.

[2] In production circuit with 1.2 kΩ gate feed resistor.

Table 7. RF Characteristics

Typical RF performance at T_{case} = 25 °C; V_{DS} = 28 V; I_{Dq1} = 30 mA; I_{Dq2} = 120 mA; $P_{L(AV)}$ = 3 W. Per section unless otherwise specified, measured in a NXP wideband f = 700 MHz to 1000 MHz production circuit.

Symbol	Parameter	Conditions	Min	Typ	Max	Unit
Test signal: single carrier W-CDMA [1]						
G_p	power gain	f = 730.5 MHz	-	35.7	-	dB
		f = 957.5 MHz	33.5	35	36.5	dB
η_D	drain efficiency	f = 730.5 MHz	-	24	-	%
		f = 957.5 MHz	23.5	27	-	%
RL_{in}	input return loss	f = 730.5 MHz	-	–20	-	dB
		f = 957.5 MHz	-	–16	–10	dB
$ACPR_{5M}$	adjacent channel power ratio (5 MHz)	f = 730.5 MHz	-	–39	-	dBc
		f = 957.5 MHz	-	–41.5	–38.5	dBc

All information provided in this document is subject to legal disclaimers.

© NXP Semiconductors N.V. 2015. All rights reserved.

Table 7. RF Characteristics *...continued*

Typical RF performance at T_{case} = 25 °C; V_{DS} = 28 V; I_{Dq1} = 30 mA; I_{Dq2} = 120 mA; $P_{L(AV)}$ = 3 W. Per section unless otherwise specified, measured in a NXP wideband f = 700 MHz to 1000 MHz production circuit.

Symbol	Parameter	Conditions	Min	Typ	Max	Unit
PAR_O	output peak-to-average ratio	f = 730.5 MHz	-	8	-	dB
		f = 957.5 MHz	7.3	8	-	dB
$\Delta I_{Dq}/\Delta T$	quiescent drain current variation with temperature	T = –40 °C to +85 °C				
		final stage I_{Dq}; gate feed resistor = 1.3 kΩ	-	0.5	-	%
		driver stage I_{Dq}; gate feed resistor = 1.2 kΩ	-	0.5	-	%
Test signal: CW [2]						
$\Delta\varphi_{s21}$	phase response difference	between sections	–10	-	+10	deg
$\Delta\|s_{21}\|^2$	insertion power gain difference	between sections	–0.5	-	+0.5	dB

[1] 3GPP test model 1; 64 DPCH; PAR = 9.9 dB at 0.01% probability on CCDF.

[2] f = 957.5 MHz.

8. Application information

Table 8. Typical performance

Test signal: 1-tone CW; RF performance at T_{case} = 25 °C; V_{DS} = 28 V; I_{Dq1} = 60 mA (both sections); I_{Dq2} = 240 mA (both sections) unless otherwise specified, measured in a NXP wideband f = 700 MHz to 1000 MHz class AB application circuit.

Symbol	Parameter	Conditions	Min	Typ	Max	Unit
$P_{L(1dB)}$	output power at 1 dB gain compression	f = 800 MHz	-	29.7	-	W
η_D	drain efficiency	at $P_{L(1dB)}$; f = 800 MHz	-	51.7	-	%
G_p	power gain	$P_{L(AV)}$ = 8 W; f = 800 MHz	-	35.8	-	dB
B_{video}	video bandwidth	2-tone CW; $P_{L(AV)}$ = 16 W; f = 881 MHz	-	168	-	MHz
G_{flat}	gain flatness	$P_{L(AV)}$ = 8 W	-	0.5	-	dB
$\Delta G/\Delta T$	gain variation with temperature	f = 800 MHz	-	0.03	-	dB/°C
$\|s_{12}\|^2$	isolation	between sections A and B; $P_{L(AV)}$ = 8 W; f = 800 MHz	-	26	-	dB
K	Rollett stability factor	T = –40 °C; f = 0.1 GHz to 3 GHz	-	>1	-	

All information provided in this document is subject to legal disclaimers.

© NXP Semiconductors N.V. 2015. All rights reserved.

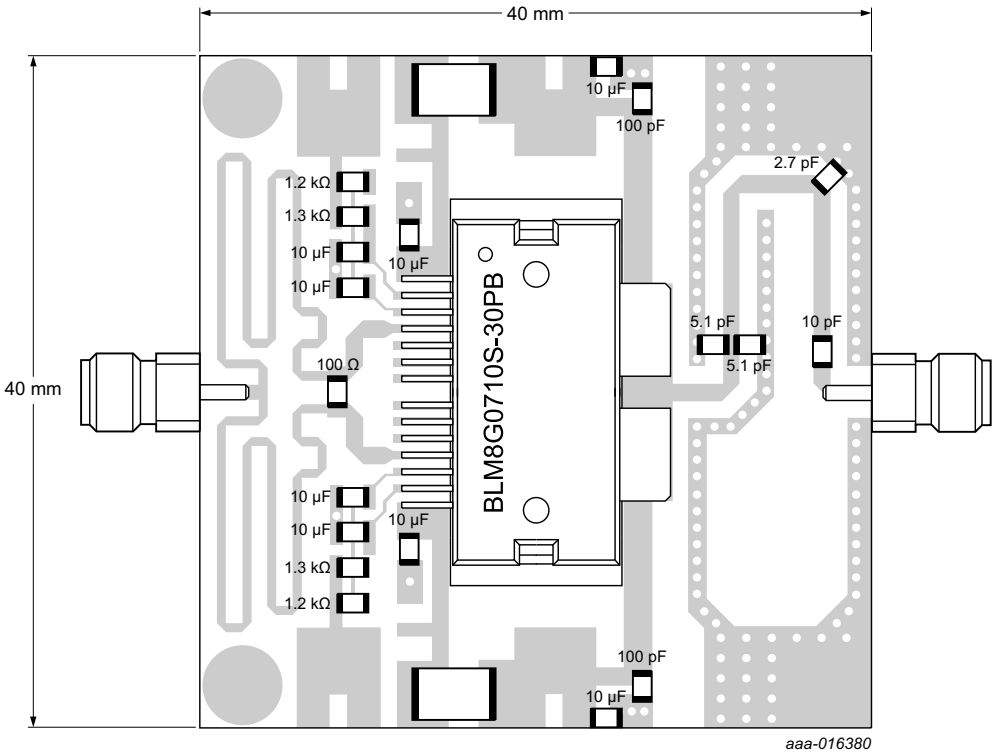

Printed-Circuit Board (PCB): Rogers 4350; thickness = 0.508 mm.

Fig 3. Component layout for class-AB application circuit

All information provided in this document is subject to legal disclaimers.

© NXP Semiconductors N.V. 2015. All rights reserved.

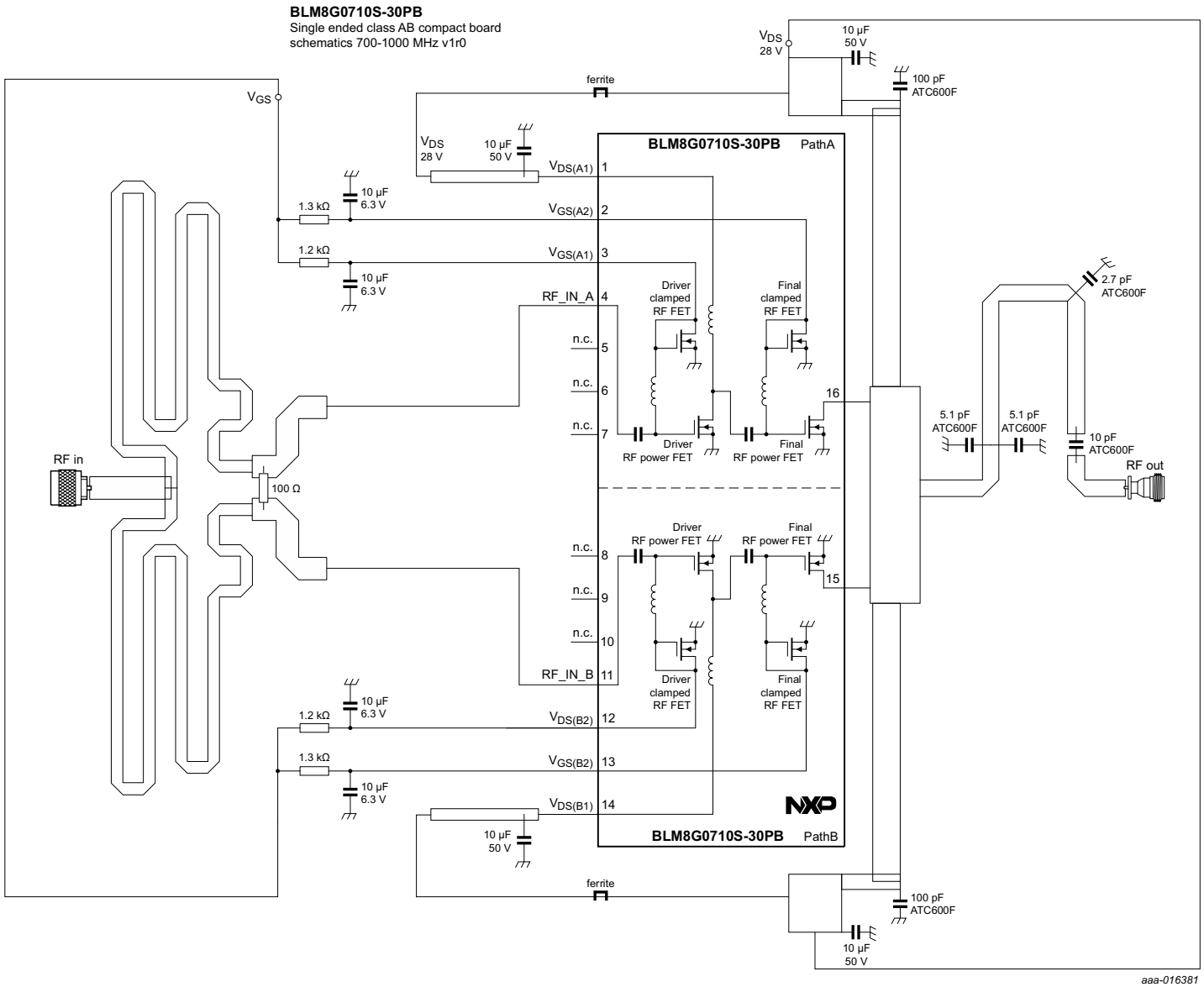

Fig 4. Electrical schematic

All information provided in this document is subject to legal disclaimers.

© NXP Semiconductors N.V. 2015. All rights reserved.

8.1 Possible circuit topologies

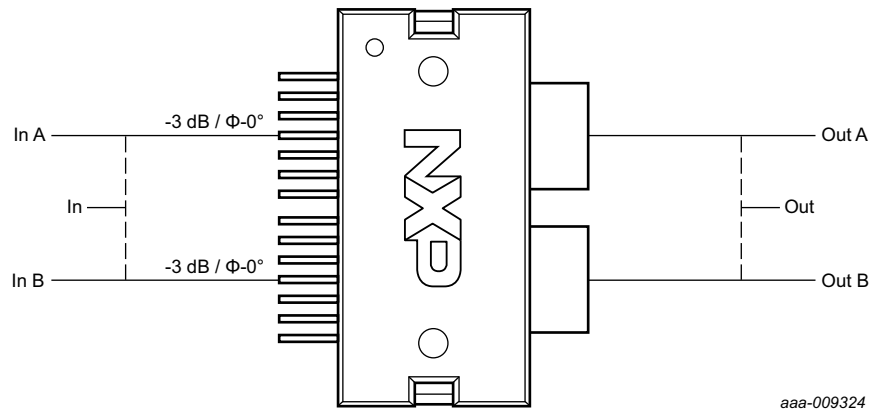

Fig 5. Dual section or single ended

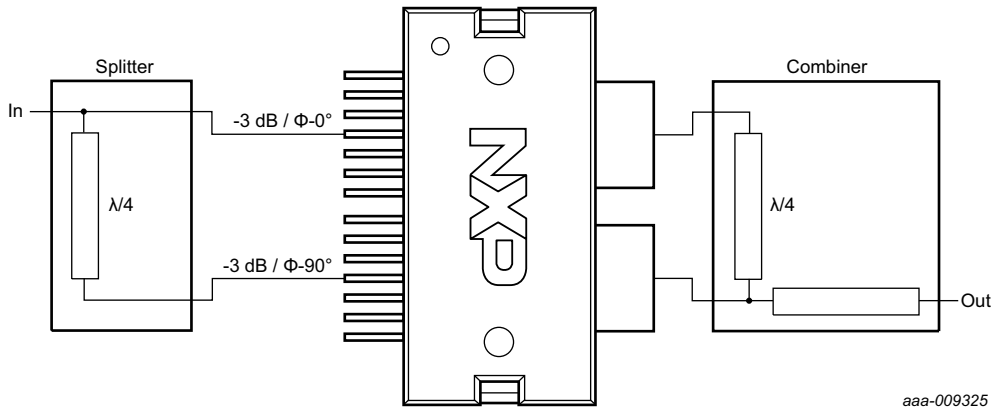

Fig 6. Doherty

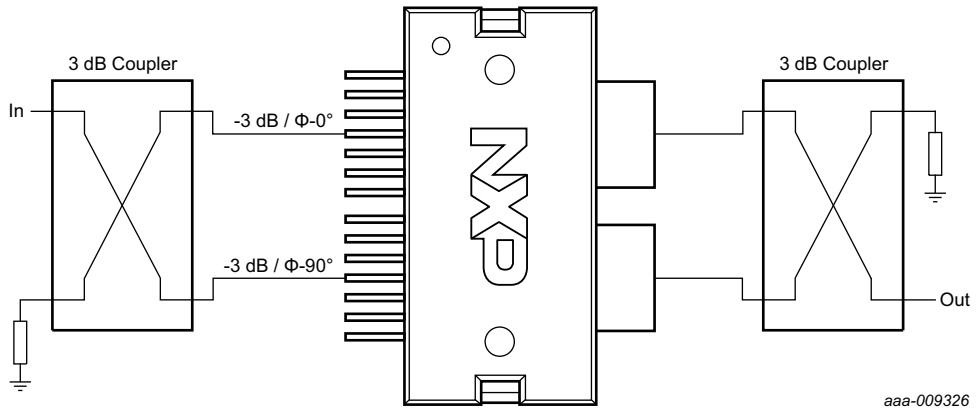

Fig 7. Quadrature combined

All information provided in this document is subject to legal disclaimers.

© NXP Semiconductors N.V. 2015. All rights reserved.

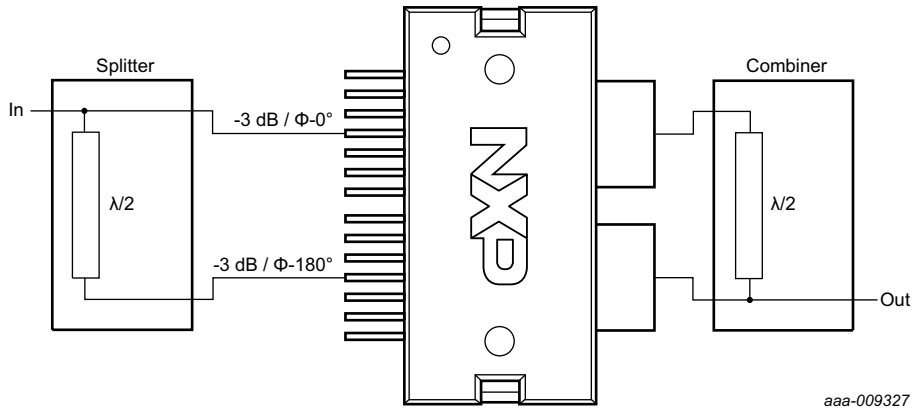

Fig 8. Push-pull

8.2 Ruggedness in class-AB operation

The BLM8G0710S-30PB and BLM8G0710S-30PBG are capable of withstanding a load mismatch corresponding to VSWR = 10 : 1 through all phases under the following conditions: V_{DS} = 32 V; I_{Dq1} = 40 mA; I_{Dq2} = 120 mA; P_i = 13 dBm, P_i is measured at CW and corresponding to $P_{L(3dB)}$ under Z_S = 50 Ω; f = 840 MHz.

All information provided in this document is subject to legal disclaimers.

© NXP Semiconductors N.V. 2015. All rights reserved.

8.3 Impedance information

Table 9. Typical impedance tuned for maximum output power

Measured load-pull data per section; test signal: pulsed CW; T_{case} = 25 °C; V_{DS} = 28 V; I_{Dq1} = 30 mA; I_{Dq2} = 120 mA; t_p = 100 μs; δ = 10 %; Z_S = 50 Ω. Typical values unless otherwise specified.

f	at 1dB gain compression point					at 3dB gain compression point				
	Z_L	$G_{p(max)}$	P_L	η_{add}	AM-PM conversion	Z_L	$G_{p(max)}$	P_L	η_{add}	AM-PM conversion
(MHz)	(Ω)	(dB)	(W)	(%)	(deg)	(Ω)	(dB)	(W)	(%)	(deg)
BLM8G0710S-30PB										
680	6.1 + j5.1	34.2	44	56.2	–7.3	6.4 + j4.3	34	44.9	59.4	–9.2
700	5.6 + j4.6	34	43.9	53.3	–6.8	6.2 + j3.6	33.9	44.8	56.4	–8.5
720	6.1 + j5.2	34.5	43.8	56.7	–6.4	6.2 + j3.7	34	44.8	56.8	–8
740	5.7 + j4.6	34.1	43.8	53.7	–5.3	6.3 + j3.6	33.9	44.8	57.2	–7.2
760	5.7 + j4.5	34	43.8	54.6	–4.4	6.3 + j3.5	33.8	44.8	57.4	–6.1
780	6.2 + j3.5	33.6	43.8	53.4	–3.6	6.2 + j3.5	33.6	44.8	57.7	–6.2
800	7.0 + j3.3	33.7	43.9	55.6	–2.6	6.2 + j2.8	33.4	44.9	56.3	–5
820	6.3 + j2.9	33.3	43.9	52.7	–3	6.3 + j2.9	33.3	44.8	56.8	–5.7
840	6.3 + j2.8	33.2	43.9	53.3	–2.1	6.8 + j2.2	33.1	44.9	56.5	–4.1
860	7.0 + j3.2	33.5	43.8	56	–2.2	7.4 + j1.7	33.1	44.8	56.2	–4
880	6.7 + j2.1	33.1	43.8	52	–1.3	7.4 + j1.7	33.1	44.8	56.2	–3.3
900	7.4 + j1.8	33.2	43.9	53.4	–1.2	7.2 + j0.9	32.9	44.8	54.3	–3.4
920	6.8 + j2.2	33.3	43.8	53.1	–1	7.3 + j0.9	32.9	44.7	54.2	–2.7
940	7.5 + j1.7	33.4	43.8	53.1	–0.5	8.1 + j0.7	33.2	44.7	55.2	–2
960	7.2 + j0.9	33.2	43.6	49.7	–0.2	7.2 + j0.9	33.2	44.6	53.4	–2.4
980	6.5 + j1.3	33.2	43.7	49.7	–0.3	8.0 + j0.8	33.4	44.7	55.1	–2
1000	8.1 + j0.9	33.4	43.6	51.4	0.3	8.1 + j0.9	33.4	44.6	55.1	–2.2
BLM8G0710S-30PBG										
700	5.7 + j4.6	34.7	43.5	53.5	–7.3	6.4 + j3.1	34.4	44.4	55.3	–8.8
720	5.8 + j3.8	34.6	43.5	52.1	–6	6.3 + j3.4	34.6	44.4	56.6	–8.3
740	5.6 + j3.8	34.5	43.5	51.7	–6.2	6.5 + j2.6	34.4	44.5	55.5	–7.6
760	6.1 + j3.2	34.3	43.5	52.5	–5	7.4 + j1.8	34.2	44.5	55.9	–6
780	5.7 + j2.7	33.8	43.5	50.1	–4.1	6.5 + j1.6	33.6	44.5	53.1	–5.5
800	6.4 + j2.2	33.7	43.7	52.7	–3.1	7.1 + j1.3	33.6	44.7	55.7	–4.8
820	6.8 + j2.4	33.8	43.7	54.3	–2.6	6.4 + j1.2	33.3	44.7	54.2	–4.8
840	7.0 + j0.8	33.3	43.7	51.2	–2.3	7.0 + j0.8	33.3	44.7	55	–4.7
860	6.8 + j1.9	33.6	43.6	53.2	–2.5	7.5 + j0.5	33.3	44.6	54.7	–4.4
880	6.6 + j1.3	33.5	43.5	50.8	–2	7.4 + j0.7	33.4	44.5	54.6	–4.3
900	7.1 + j1.3	33.7	43.4	51.6	–1.2	8.2 + j0.3	33.6	44.4	54.8	–2.9
920	7.4 + j0.0	33.4	43.4	49.4	–0.7	7.4 + j0.1	33.4	44.5	53.8	–2.8
940	8.0 – j0.2	33.4	43.3	49.3	–0.2	8.0 + j0.1	33.5	44.4	53.9	–2.4
960	7.8 + j0.7	34	43.3	51.1	0.1	7.9 – j0.6	33.5	44.3	52.4	–2
980	7.7 – j0.5	33.7	43.3	48.6	0.5	7.7 – j0.5	33.7	44.4	53	–1.6
1000	7.2 – j0.4	33.5	43.3	48.4	0.1	7.2 – j0.4	33.5	44.3	52.7	–2.3

All information provided in this document is subject to legal disclaimers.

© NXP Semiconductors N.V. 2015. All rights reserved.

Table 10. Typical impedance tuned for maximum power added efficiency

Measured load-pull data per section; test signal: pulsed CW; T_{case} = 25 °C; V_{DS} = 28 V; I_{Dq1} = 30 mA; I_{Dq2} = 120 mA; t_p = 100 μs; δ = 10 %; Z_S = 50 Ω. Typical values unless otherwise specified.

	at 1dB gain compression point					at 3dB gain compression point				
f	Z_L	$G_{p(max)}$	P_L	η_{add}	AM-PM conversion	Z_L	$G_{p(max)}$	P_L	η_{add}	AM-PM conversion
(MHz)	(Ω)	(dB)	(W)	(%)	(deg)	(Ω)	(dB)	(W)	(%)	(deg)
BLM8G0710S-30PB										
680	9.6 + j9.3	35.5	42.6	65.9	–8.9	9.3 + j8.4	35.3	43.6	68.1	–11.1
700	8.7 + j9.5	35.6	42.5	65.4	–9	9.2 + j8.5	35.5	43.5	67.3	–10.7
720	8.8 + j9.6	35.7	42.3	64.5	–8	8.8 + j9.6	35.7	43	67	–11
740	8.0 + j9.5	35.6	42.3	64.2	–7.3	8.5 + j8.7	35.4	43.3	66.7	–9.7
760	8.9 + j9.4	35.5	42.3	64.5	–5.5	9.4 + j8.4	35.3	43.3	66.7	–7.3
780	8.4 + j8.5	35.1	42.5	63.8	–5	8.4 + j8.5	35.1	43.2	66.1	–8.2
800	8.4 + j8.6	35.1	42.4	63.5	–4.2	9.2 + j8.5	35.1	43.2	65.4	–6.1
820	8.4 + j8.7	34.9	42.3	62.7	–4.1	8.7 + j6.8	34.6	43.7	65.1	–6.3
840	8.5 + j8.6	34.9	42.3	63	–3.1	7.9 + j6.9	34.6	43.7	65.1	–6.2
860	8.5 + j8.5	34.8	42.2	62.1	–2.9	7.9 + j6.8	34.5	43.7	64.5	–6.2
880	7.6 + j8.5	34.8	42.1	61.8	–3	7.8 + j6.8	34.5	43.6	64	–5.3
900	8.0 + j7.7	34.7	42.4	61.9	–2.3	7.8 + j6.8	34.6	43.5	63.8	–5.2
920	8.7 + j6.8	34.6	42.7	61.2	–1	8.1 + j7.8	34.8	43.1	63.1	–3.9
940	8.2 + j7.7	34.9	42.2	60.6	–1.3	8.3 + j5.9	34.6	43.7	62.4	–2.8
960	7.9 + j6.8	34.9	42.4	59.3	–1.1	8.7 + j6.7	34.8	43.3	61.8	–1.9
980	7.5 + j8.5	35.2	41.7	59.8	–1	8.6 + j6.8	34.8	43.3	62.1	–1.5
1000	8.0 + j7.8	35	41.9	59.1	–0.2	7.1 + j6.8	34.9	43.1	61.6	–3.2
BLM8G0710S-30PBG										
700	8.4 + j8.2	36	42.3	63.4	–9	8.5 + j8.5	36.1	42.9	65.8	–12.7
720	8.6 + j9.1	36.2	41.9	63.9	–8.1	8.9 + j8.8	36.1	42.8	66.8	–11
740	8.3 + j8.2	36	42.2	62.6	–7.6	8.3 + j8.2	36	42.9	65.4	–10.9
760	9.6 + j7.7	35.7	42.2	62.2	–5.4	8.8 + j8.7	35.9	42.6	65.1	–9.2
780	8.5 + j7.1	35.4	42.4	61.5	–5.1	7.3 + j8.1	35.5	42.7	64.2	–10.2
800	8.0 + j8.3	35.5	41.8	62.1	–4.8	7.1 + j8.0	35.5	42.8	64.9	–9.7
820	8.0 + j7.1	35.1	42.3	61.6	–4	8.3 + j8.2	35.3	42.6	64	–6.9
840	8.8 + j7.2	35.1	42.1	61.4	–3.4	8.1 + j8.1	35.3	42.5	63.5	–7
860	8.4 + j7.1	35.1	42.1	60.9	–3.3	8.4 + j7.1	35.1	42.9	63.4	–6
880	8.1 + j6.4	35.1	42.2	60.1	–2.9	8.2 + j7.4	35.3	42.7	62.3	–6
900	7.3 + j6.2	35.2	42.1	59.5	–2.8	8.0 + j7.2	35.4	42.6	62.1	–4.9
920	8.0 + j7.4	35.4	41.6	59.5	–2.1	7.3 + j6.3	35.3	42.9	61.8	–5.4
940	8.1 + j6.6	35.3	41.8	58.7	–1.5	6.8 + j6.5	35.4	42.6	60.9	–5.7
960	9.5 + j5.4	35.2	42.2	57.8	0	7.0 + j6.9	35.8	42.4	60.5	–4.2
980	8.1 + j6.5	35.4	41.7	58.1	–0.3	7.1 + j6.3	35.5	42.6	61.3	–3
1000	6.9 + j4.9	35	42.2	58.2	–1.1	7.0 + j6.0	35.2	42.7	61.1	–3.2

All information provided in this document is subject to legal disclaimers.

© NXP Semiconductors N.V. 2015. All rights reserved.

8.4 Graphs

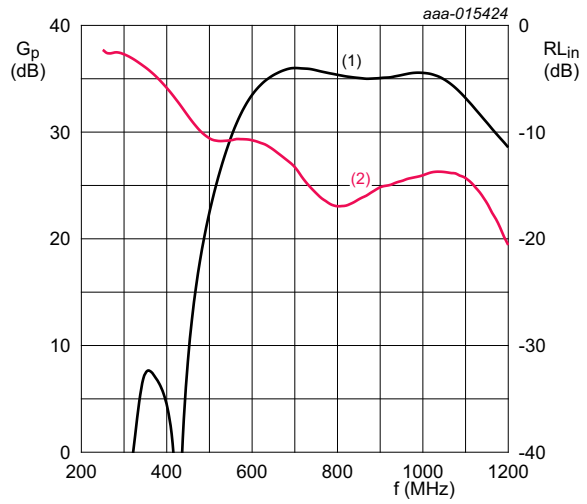

T_{case} = 25 °C; V_{DS} = 28 V; I_{Dq1} = 30 mA; I_{Dq2} = 120 mA; P_L = 0.25 W. Per section.

(1) magnitude of G_p

(2) magnitude of RL_{in}

Fig 9. Wideband power gain and input return loss as function of frequency; typical values

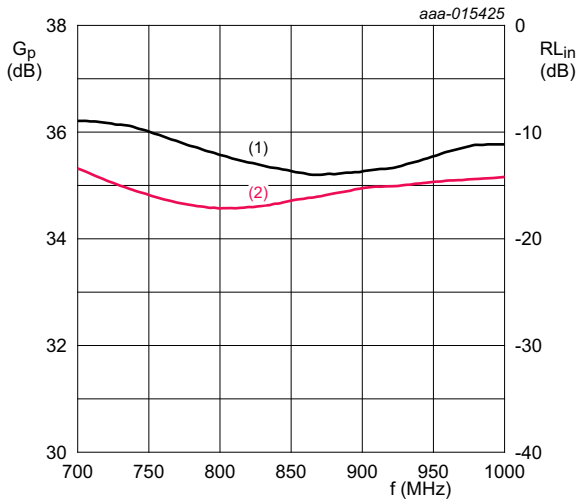

T_{case} = 25 °C; V_{DS} = 28 V; I_{Dq1} = 30 mA; I_{Dq2} = 120 mA; P_L = 0.25 W. Per section.

(1) magnitude of G_p

(2) magnitude of RL_{in}

Fig 10. In-band power gain and input return loss as function of frequency; typical values

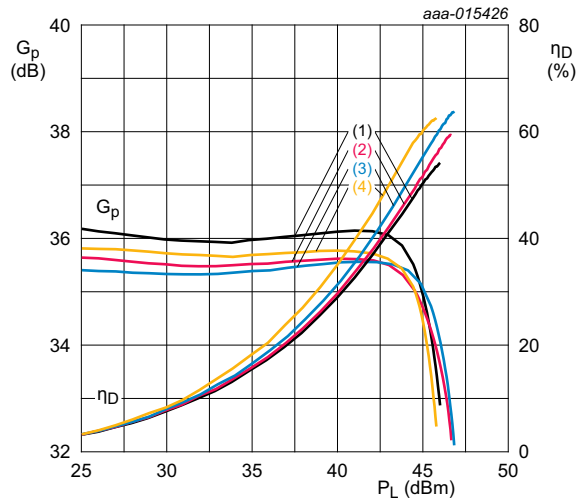

T_{case} = 25 °C; V_{DS} = 28 V; I_{Dq1} = 30 mA; I_{Dq2} = 120 mA. Per section.

(1) f = 700 MHz

(2) f = 800 MHz

(3) f = 900 MHz

(4) f = 1000 MHz

Fig 11. Power gain and drain efficiency as function of output power; typical values

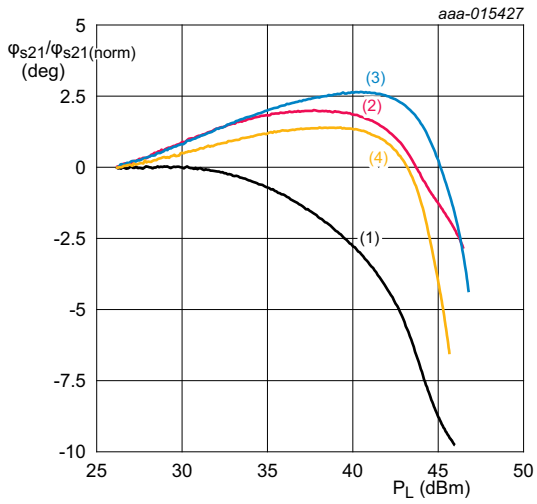

Normalized at P_L = 26 dBm; T_{case} = 25 °C; V_{DS} = 28 V; I_{Dq1} = 30 mA; I_{Dq2} = 120 mA. Per section.

(1) f = 700 MHz

(2) f = 800 MHz

(3) f = 900 MHz

(4) f = 1000 MHz

Fig 12. Normalized phase response as a function of output power; typical values

All information provided in this document is subject to legal disclaimers.

© NXP Semiconductors N.V. 2015. All rights reserved.

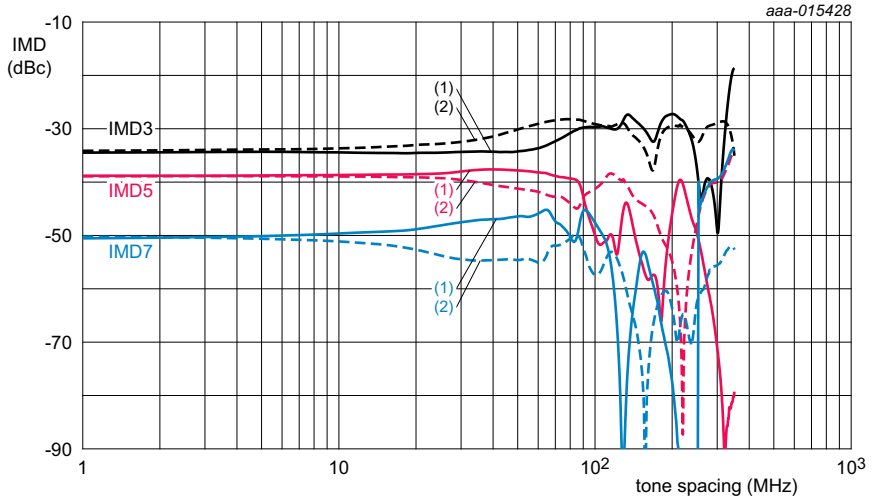

T_{case} = 25 °C; V_{DS} = 28 V; I_{Dq1} = 30 mA; I_{Dq2} = 120 mA; f = 881 MHz; 2-tone CW; P_L = 8 W. Per section.

(1) IMD low

(2) IMD high

Fig 13. Intermodulation distortion as a function of tone spacing; typical values

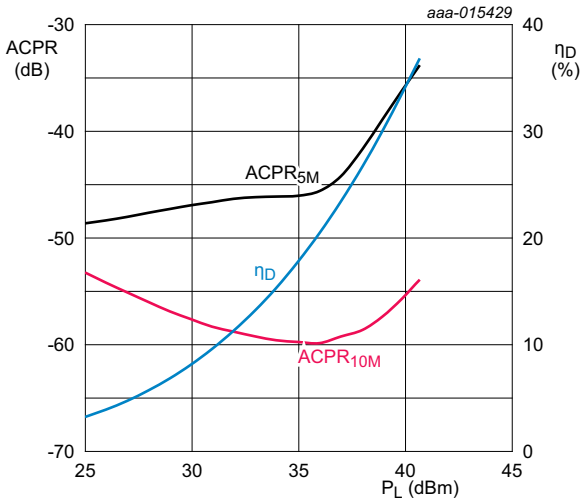

T_{case} = 25 °C; V_{DS} = 28 V; I_{Dq1} = 30 mA; I_{Dq2} = 120 mA; f = 900 MHz; 1-carrier W-CDMA; test model 1; PAR = 9.9 dB at 0.01 % probability on CCDF. Per section.

Fig 14. Adjacent channel power ratio and drain efficiency as function of output power; typical values

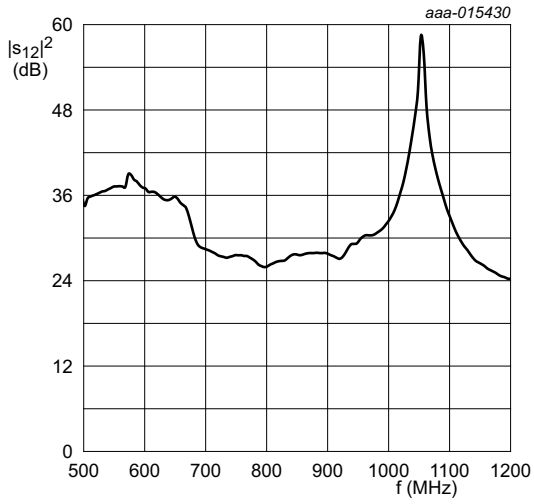

T_{case} = 25 °C; V_{DS} = 28 V; I_{Dq1} = 30 mA; I_{Dq2} = 120 mA; measured on evaluation board.

Fig 15. Isolation as a function of frequency; typical values

All information provided in this document is subject to legal disclaimers.

© NXP Semiconductors N.V. 2015. All rights reserved.

9. Package outline

HSOP16F: plastic, heatsink small outline package; 16 leads(flat) **SOT1211-1**

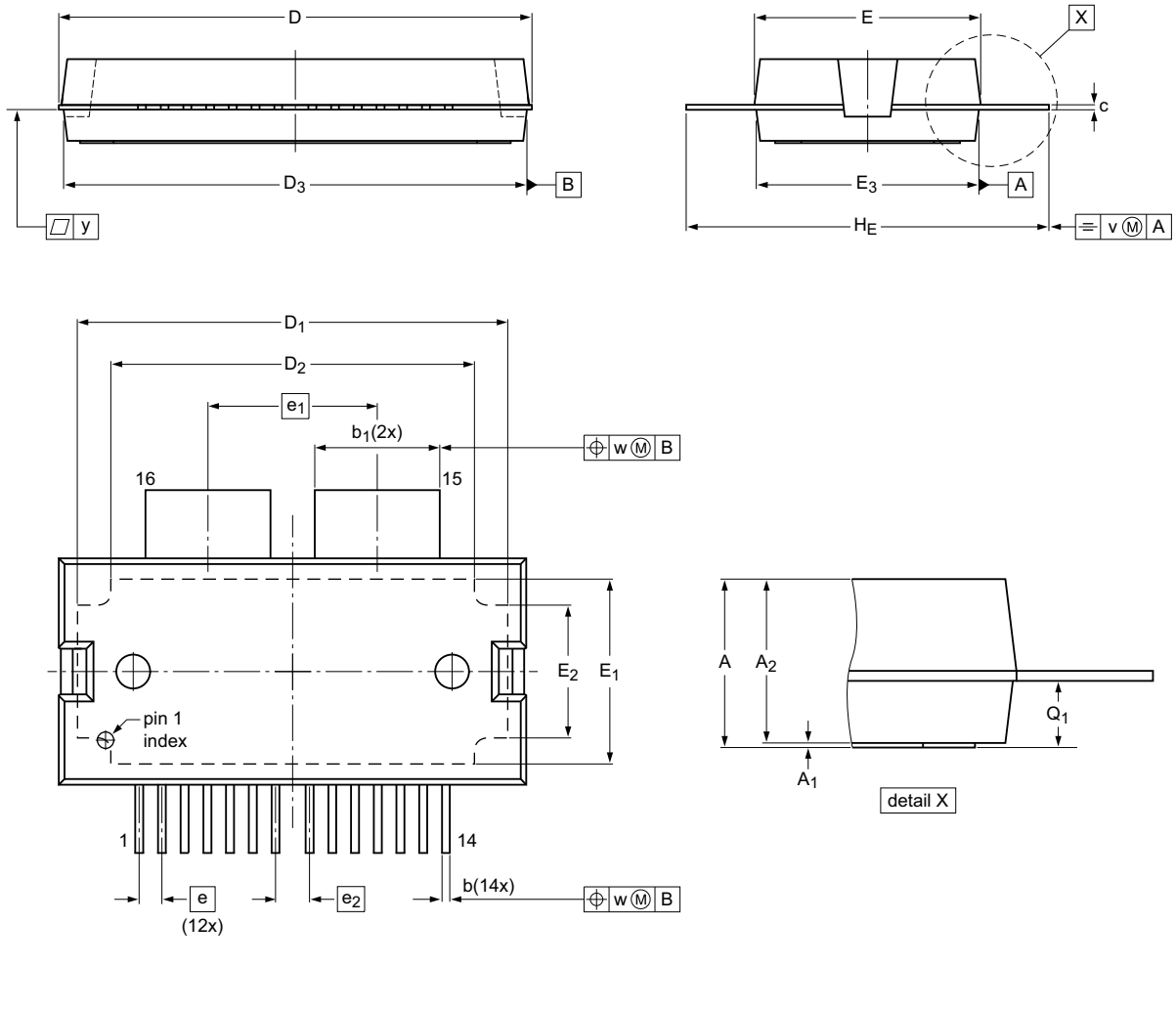

Dimensions (mm are the original dimensions)

Unit		A	A_1	A_2	b	b_1	c	$D^{(1)}$	D_1	D_2	D_3	$E^{(1)}$	E_1	E_2	E_3	e	e_1	e_2	H_E	Q_1	v	w	y
mm	max	3.9	0.2	3.65	0.40	5.55	0.27	20.62	19.00	16.05	20.44	10.01	8.18	5.89	9.83				16.16	1.62			
	nom		0.1	3.60	0.35	5.50	0.22	20.57	18.95	16.00	20.39	9.96	8.13	5.84	9.78	1.0	7.45	1.5	15.96	1.57	0.25	0.25	0.1
	min		0	3.55	0.30	5.45	0.17	20.52	18.90	15.95	20.34	9.91	8.08	5.79	9.73				15.76	1.52			

Note

1. Plastic or metal protrusions of 0.25 mm maximum per side are not included.

sot1211-1_po

Outline version	References				European projection	Issue date
	IEC	JEDEC	JEITA			
SOT1211-1						~~13-10-18~~ 13-10-22

Fig 16. Package outline SOT1211-1 (HSOP16F)

All information provided in this document is subject to legal disclaimers.

© NXP Semiconductors N.V. 2015. All rights reserved.

HSOP16: plastic, heatsink small outline package; 16 leads **SOT1212-1**

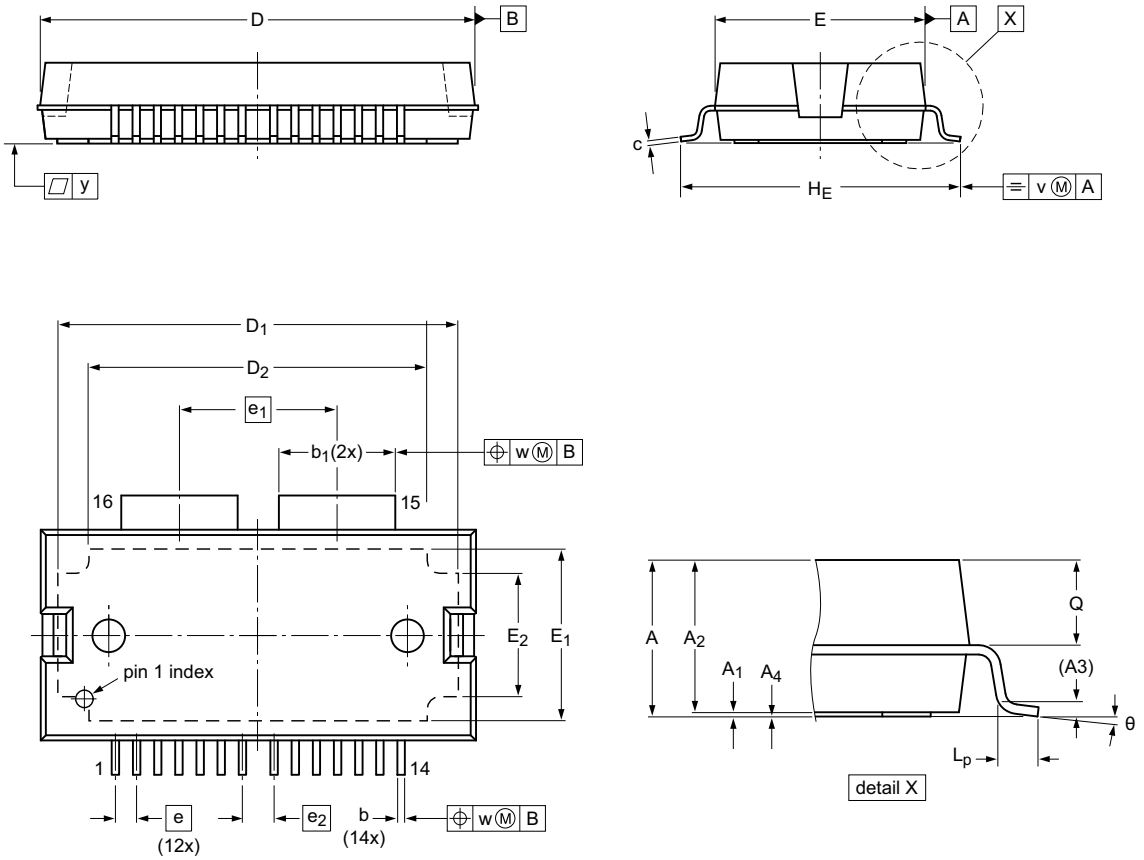

w	y	θ
0.25	0.1	7° / 3° / 0°

0 10 mm
scale

Dimensions (mm are the original dimensions)

Unit		A	A_1	A_2	A_3	A_4	b	b_1	c	$D^{(1)}$	D_1	D_2	$E^{(1)}$	E_1	E_2	e	e_1	e_2	H_E	L_p	Q	v
mm	max	3.9	0.2	3.65		0.06	0.40	5.55	0.27	20.62	19.00	16.05	10.01	8.18	5.89				13.5	1.10	2.07	
	nom		0.1	3.60	0.35	0	0.35	5.50	0.22	20.57	18.95	16.00	9.96	8.13	5.84	1.0	7.45	1.5	13.2	0.95	2.02	0.25
	min		0	3.55		-0.02	0.30	5.45	0.17	20.52	18.90	15.95	9.91	8.08	5.79				12.9	0.80	1.97	

Note
1. Plastic or metal protrusions of 0.25 mm maximum per side are not included.

sot1212-1_po

Outline version	References				European projection	Issue date
	IEC	JEDEC	JEITA			
SOT1212-1						~~12-05-14~~ 12-05-21

Fig 17. Package outline SOT1212-1 (HSOP16)

All information provided in this document is subject to legal disclaimers.

© NXP Semiconductors N.V. 2015. All rights reserved.

10. Handling information

CAUTION

This device is sensitive to ElectroStatic Discharge (ESD). Observe precautions for handling electrostatic sensitive devices.

Such precautions are described in the *ANSI/ESD S20.20*, *IEC/ST 61340-5*, *JESD625-A* or equivalent standards.

11. Abbreviations

Table 11. Abbreviations

Acronym	Description
AM	Amplitude Modulation
3GPP	3rd Generation Partnership Project
CCDF	Complementary Cumulative Distribution Function
CW	Continuous Wave
DPCH	Dedicated Physical CHannel
ESD	ElectroStatic Discharge
GEN8	Eighth Generation
LDMOS	Laterally Diffused Metal Oxide Semiconductor
MMIC	Monolithic Microwave Integrated Circuit
MTF	Median Time to Failure
PAR	Peak-to-Average Ratio
PM	Phase Modulation
VSWR	Voltage Standing-Wave Ratio
W-CDMA	Wideband Code Division Multiple Access

12. Revision history

Table 12. Revision history

Document ID	Release date	Data sheet status	Change notice	Supersedes
BLM8G0710S-30PB_S-30PBG v.1	20150123	Product data sheet	-	-

All information provided in this document is subject to legal disclaimers.

© NXP Semiconductors N.V. 2015. All rights reserved.

13. Legal information

13.1 Data sheet status

Document status[1][2]	Product status[3]	Definition
Objective [short] data sheet	Development	This document contains data from the objective specification for product development.
Preliminary [short] data sheet	Qualification	This document contains data from the preliminary specification.
Product [short] data sheet	Production	This document contains the product specification.

[1] Please consult the most recently issued document before initiating or completing a design.

[2] The term 'short data sheet' is explained in section "Definitions".

[3] The product status of device(s) described in this document may have changed since this document was published and may differ in case of multiple devices. The latest product status information is available on the Internet at URL http://www.nxp.com.

13.2 Definitions

Draft — The document is a draft version only. The content is still under internal review and subject to formal approval, which may result in modifications or additions. NXP Semiconductors does not give any representations or warranties as to the accuracy or completeness of information included herein and shall have no liability for the consequences of use of such information.

Short data sheet — A short data sheet is an extract from a full data sheet with the same product type number(s) and title. A short data sheet is intended for quick reference only and should not be relied upon to contain detailed and full information. For detailed and full information see the relevant full data sheet, which is available on request via the local NXP Semiconductors sales office. In case of any inconsistency or conflict with the short data sheet, the full data sheet shall prevail.

Product specification — The information and data provided in a Product data sheet shall define the specification of the product as agreed between NXP Semiconductors and its customer, unless NXP Semiconductors and customer have explicitly agreed otherwise in writing. In no event however, shall an agreement be valid in which the NXP Semiconductors product is deemed to offer functions and qualities beyond those described in the Product data sheet.

13.3 Disclaimers

Limited warranty and liability — Information in this document is believed to be accurate and reliable. However, NXP Semiconductors does not give any representations or warranties, expressed or implied, as to the accuracy or completeness of such information and shall have no liability for the consequences of use of such information. NXP Semiconductors takes no responsibility for the content in this document if provided by an information source outside of NXP Semiconductors.

In no event shall NXP Semiconductors be liable for any indirect, incidental, punitive, special or consequential damages (including - without limitation - lost profits, lost savings, business interruption, costs related to the removal or replacement of any products or rework charges) whether or not such damages are based on tort (including negligence), warranty, breach of contract or any other legal theory.

Notwithstanding any damages that customer might incur for any reason whatsoever, NXP Semiconductors' aggregate and cumulative liability towards customer for the products described herein shall be limited in accordance with the *Terms and conditions of commercial sale* of NXP Semiconductors.

Right to make changes — NXP Semiconductors reserves the right to make changes to information published in this document, including without limitation specifications and product descriptions, at any time and without notice. This document supersedes and replaces all information supplied prior to the publication hereof.

Suitability for use — NXP Semiconductors products are not designed, authorized or warranted to be suitable for use in life support, life-critical or safety-critical systems or equipment, nor in applications where failure or malfunction of an NXP Semiconductors product can reasonably be expected to result in personal injury, death or severe property or environmental damage. NXP Semiconductors and its suppliers accept no liability for inclusion and/or use of NXP Semiconductors products in such equipment or applications and therefore such inclusion and/or use is at the customer's own risk.

Applications — Applications that are described herein for any of these products are for illustrative purposes only. NXP Semiconductors makes no representation or warranty that such applications will be suitable for the specified use without further testing or modification.

Customers are responsible for the design and operation of their applications and products using NXP Semiconductors products, and NXP Semiconductors accepts no liability for any assistance with applications or customer product design. It is customer's sole responsibility to determine whether the NXP Semiconductors product is suitable and fit for the customer's applications and products planned, as well as for the planned application and use of customer's third party customer(s). Customers should provide appropriate design and operating safeguards to minimize the risks associated with their applications and products.

NXP Semiconductors does not accept any liability related to any default, damage, costs or problem which is based on any weakness or default in the customer's applications or products, or the application or use by customer's third party customer(s). Customer is responsible for doing all necessary testing for the customer's applications and products using NXP Semiconductors products in order to avoid a default of the applications and the products or of the application or use by customer's third party customer(s). NXP does not accept any liability in this respect.

Limiting values — Stress above one or more limiting values (as defined in the Absolute Maximum Ratings System of IEC 60134) will cause permanent damage to the device. Limiting values are stress ratings only and (proper) operation of the device at these or any other conditions above those given in the Recommended operating conditions section (if present) or the Characteristics sections of this document is not warranted. Constant or repeated exposure to limiting values will permanently and irreversibly affect the quality and reliability of the device.

Terms and conditions of commercial sale — NXP Semiconductors products are sold subject to the general terms and conditions of commercial sale, as published at http://www.nxp.com/profile/terms, unless otherwise agreed in a valid written individual agreement. In case an individual agreement is concluded only the terms and conditions of the respective agreement shall apply. NXP Semiconductors hereby expressly objects to applying the customer's general terms and conditions with regard to the purchase of NXP Semiconductors products by customer.

No offer to sell or license — Nothing in this document may be interpreted or construed as an offer to sell products that is open for acceptance or the grant, conveyance or implication of any license under any copyrights, patents or other industrial or intellectual property rights.

All information provided in this document is subject to legal disclaimers.

© NXP Semiconductors N.V. 2015. All rights reserved.

Export control — This document as well as the item(s) described herein may be subject to export control regulations. Export might require a prior authorization from competent authorities.

Non-automotive qualified products — Unless this data sheet expressly states that this specific NXP Semiconductors product is automotive qualified, the product is not suitable for automotive use. It is neither qualified nor tested in accordance with automotive testing or application requirements. NXP Semiconductors accepts no liability for inclusion and/or use of non-automotive qualified products in automotive equipment or applications.

In the event that customer uses the product for design-in and use in automotive applications to automotive specifications and standards, customer (a) shall use the product without NXP Semiconductors' warranty of the product for such automotive applications, use and specifications, and (b) whenever customer uses the product for automotive applications beyond NXP Semiconductors' specifications such use shall be solely at customer's own risk, and (c) customer fully indemnifies NXP Semiconductors for any liability, damages or failed product claims resulting from customer design and use of the product for automotive applications beyond NXP Semiconductors' standard warranty and NXP Semiconductors' product specifications.

Translations — A non-English (translated) version of a document is for reference only. The English version shall prevail in case of any discrepancy between the translated and English versions.

13.4 Trademarks

Notice: All referenced brands, product names, service names and trademarks are the property of their respective owners.

14. Contact information

For more information, please visit: **http://www.nxp.com**

For sales office addresses, please send an email to: **salesaddresses@nxp.com**

All information provided in this document is subject to legal disclaimers.

© NXP Semiconductors N.V. 2015. All rights reserved.

15. Contents

1 Product profile 1
1.1 General description 1
1.2 Features and benefits 1
1.3 Applications 1
2 Pinning information 2
2.1 Pinning 2
2.2 Pin description 2
3 Ordering information 3
4 Block diagram 3
5 Limiting values 3
6 Thermal characteristics 4
7 Characteristics 4
8 Application information 5
8.1 Possible circuit topologies 8
8.2 Ruggedness in class-AB operation 9
8.3 Impedance information 10
8.4 Graphs 12
9 Package outline 14
10 Handling information 16
11 Abbreviations 16
12 Revision history 16
13 Legal information 17
13.1 Data sheet status 17
13.2 Definitions 17
13.3 Disclaimers 17
13.4 Trademarks 18
14 Contact information 18
15 Contents 19

Please be aware that important notices concerning this document and the product(s) described herein, have been included in section 'Legal information'.

© NXP Semiconductors N.V. 2015. All rights reserved.

For more information, please visit: http://www.nxp.com
For sales office addresses, please send an email to: salesaddresses@nxp.com

Date of release: 23 January 2015
Document identifier: BLM8G0710S-30PB_S-30PBG