TS3420

2A, 1.25MHz Synchronous Buck Converter

SOT-26

Pin Definition:

1. EN
2. Ground
3. Switching Output
4. Input
5. Ground
6. Feedback

General Description

TS3420 is a high efficiency monolithic synchronous buck regulator using a constant frequency, current mode architecture. The device is available in an adjustable version. Supply current with no load is 200uA and drops to <1uA in shutdown. The 2.8V to 5.5V input voltage range makes TS3420 ideally suited for single Li-Ion, two to three AA battery-powered applications. 100% duty cycle provides low dropout operation, extending battery life in portable systems. Switching frequency is internally set at 1.25MHz, allowing the use of small surface mount inductors and capacitors. The internal synchronous switch increases efficiency and decreases need of an external schottky diode. Low output voltages are easily supported with the 0.6V feedback reference voltage.

Features

- High Efficiency: Up to 96%
- 2.8V to 5.5V Input Voltage Range
- Output Voltage from 0.6V to VIN
- Short Circuit Protection (SCP)
- Build in Soft-Start Function
- 1.25MHz Constant Frequency Operation
- Up to 2A Output Current
- No Schottky Diode Required in Application
- ≤1uA Shutdown Current
- Current Mode Operation for Excellent Line and Load Transient Response

Application

- Cellular Phones
- Digital Still Cameras
- Portable Electronics
- USB Devices

Pin Description

Name	Description
EN	Power-off pin H：normal operation L：Step-down operation stopped
GND	Ground pin
SW	Switch output pin. Connect external inductor here. Minimize trace area at this pin to reduce EMI.
VCC	IC power supply pin
FB	Output Feedback pin

Ordering Information

Part No.	Package	Packing
TS3420CX6 RFG	SOT-26	3Kpcs/ 7" Reel

Note: "G" denote for Halogen Free Product

Application Circuit

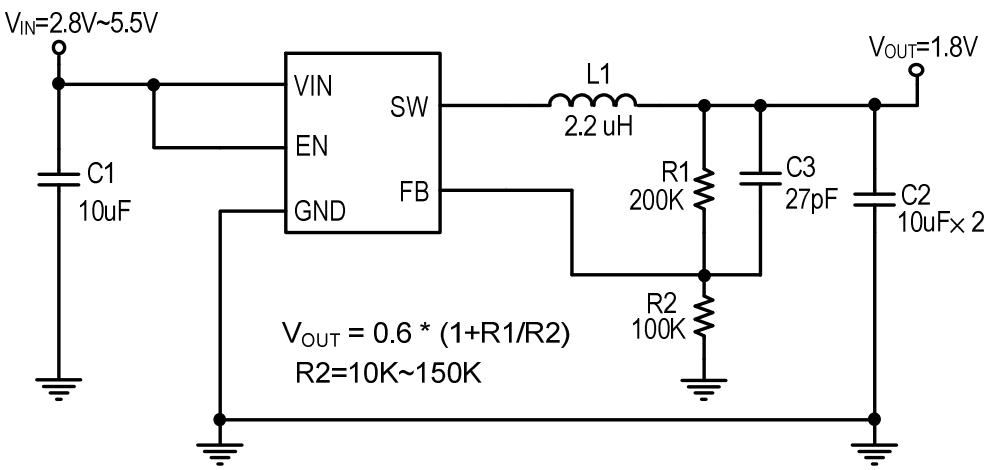

Absolute Maximum Rating

Characteristics	Symbol	Rating	Unit
VIN Pin Voltage	V_{IN}	V_{SS} - 0.3 to V_{SS} + 6.5	V
Feedback Pin Voltage	V_{FB}	V_{SS} - 0.3 to V_{IN} + 0.3	V
EN Pin Voltage	V_{EN}	V_{SS} - 0.3 to V_{IN} + 0.3	V
Switch Pin Voltage	V_{SW}	V_{SS} - 0.3 to V_{IN} + 0.3	V
Power Dissipation	PD	$(T_J - T_A) / \theta_{JA}$	mW
Storage Temperature Range	T_{ST}	-40 to +150	℃
Operating Temperature Range	T_{OP}	-40 to +85	℃
Junction Temperature	T_J	+125	℃
Thermal Resistance from Junction to case	θ_{JC}	50	$^oC/W$
Thermal Resistance from Junction to ambient	θ_{JA}	100	$^oC/W$

Note: θ_{JA} is measured with the PCB copper area of approximately 1 in^2 (Multi-layer).

Electrical Specifications (Ta = 25°C, V_{IN}=V_{RUN}=3.6V unless otherwise noted)

Characteristics	Symbol	Conditions	Min	Typ	Max	Units
Input Voltage Range	V_{IN}		2.8	--	5.5	V
V_{IN} UVLO Threshold	V_{IN}		--	2.2	--	V
V_{IN} UVLO Hysteresis	$V_{IN(hys)}$		--	0.35	--	V
Feedback Voltage	V_{FB}	T_A =25℃	0.588	0.6	0.612	V
Feedback Bias Current	I_{FB}	V_{FB}=0.65V	--	--	±30	nA
Quiescent Current	I_{CCQ}	V_{FB}=1V	--	200	350	uA
Shutdown Supply Current	I_{SD}	V_{EN} =0V	--	0.1	1	uA
Switching Current Limit	I_{LIMIT}		2.2	3	--	A
Line Regulation	$\Delta V_{OUT}/V_{OUT}$	V_{IN}=2.5V to 5.5V	--	0.4	--	%/V
Load Regulation	$\Delta V_{OUT}/V_{OUT}$	I_{OUT}=0.01 to 2A	--	1	--	%
Oscillation Frequency	F_{OSC}	I_{OUT}=300mA	1.0	1.25	1.5	MHz
$R_{DS(ON)}$ of P-CH MOSFET	R_{DSON}	V_{IN}=5V	--	120	-	mΩ
Feedback Bias Current	I_{FB}	V_{FB}=0.65V	--	--	±30	nA
$R_{DS(ON)}$ of N-CH MOSFET	R_{DSON}	V_{IN} = 5V (Note)	--	100	-	mΩ
EN pin logic Input Threshold Voltage	V_{ENL}		--	--	0.4	V
	V_{ENH}		1.5	--	--.	
EN Pin Input Current	I_{EN}		--	±0.1	±1	uA
Thermal shutdown	T_{DS}		--	150	--	℃
Thermal shutdown Hysteresis	T_{SH}		--	30	--	℃

Note: Guaranteed by Design

Block Diagram

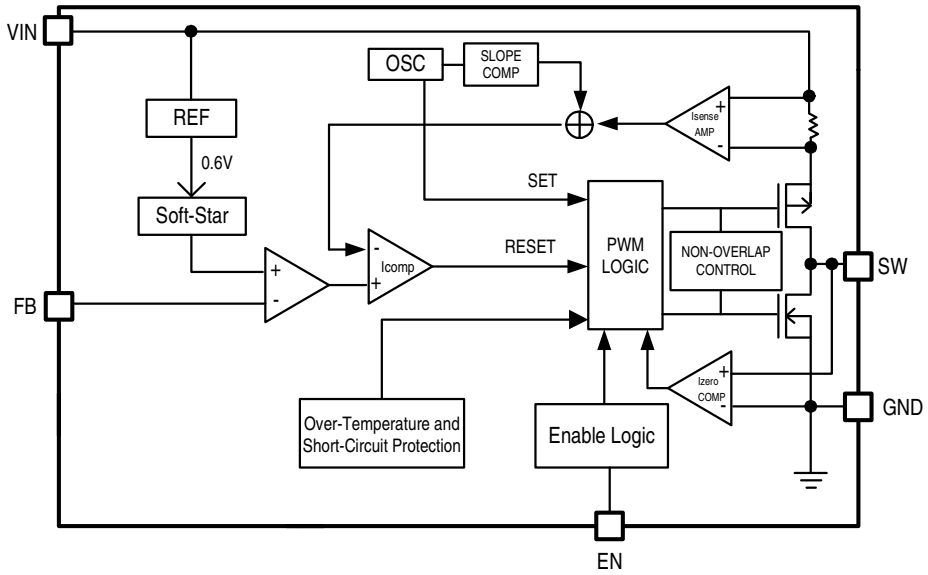

Function Description

Operation

TS3420 is a monolithic switching mode step-down DC-DC converter. It utilizes internal MOSFETs to achieve high efficiency and can generate very low output voltage by using internal reference at 0.6V. It operates at a fixed switching frequency, and uses the slope compensated current mode architecture. This step-down DC-DC Converter supplies minimum 2A output current at input voltage range from 2.8V to 5.5V.

Current Mode PWM Control

Slope compensated current mode PWM control provides stable switching and cycle-by-cycle current limit for excellent load and line transient responses and protection of the internal main switch (P-Ch MOSFET) and synchronous rectifier (N-CH MOSFET). During normal operation, the internal P-Ch MOSFET is turned on for a certain time to ramp the inductor current at each rising edge of the internal oscillator, and switched off when the peak inductor current is above the error voltage. The current comparator, I_{COMP}, limits the peak inductor current. When the main switch is off, the synchronous rectifier will be turned on immediately and stay on until either the inductor current starts to reverse, as indicated by the current reversal comparator, I_{ZERO}, or the beginning of the next clock cycle.

Application Information

Setting the Output Voltage

Application circuit item shows the basic application circuit with TS3410 adjustable output version. The external resistor sets the output voltage according to the following formula:

$$Vout = 0.6V \times (1 + \frac{R1}{R2})$$

Table 1: Resistor Select for Output Voltage Setting

VOUT	R2	R1
1.2V	300K	300K
1.5V	300K	450K
1.8V	300K	600K
2.5V	150K	470K
3.3V	120K	540K

Inductor Selection

For most designs, the TS3410 operates with inductors of 2.2µH to 3.3µH. Low inductance values are physically smaller but require faster switching, which results in some efficiency loss. The inductor value can be derived from the following formula:

$$L = \frac{Vout \times (Vin-Vout)}{Vin \times \Delta IL \times Fosc}$$

Table 2: Inductor Select for Output Voltage Setting (V_{IN}=3.6V)

VOUT	1.2V	1.5V	1.8V	2.5V
Inductor	2.7uH	2.7uH	2.7uH	2.2uH
Part Number WE-TPC	7440430027	7440430027	7440430027	7440430022

Note: Part Type MH or M (www.we-online.com)

Where is inductor Ripple Current. Large value inductors lower ripple current and small value inductors result in high ripple currents. Choose inductor ripple current approximately 20% of the maximum load current 2A, ΔIL=400mA.

For output voltages above 2.0V, when light-load efficiency is important, the minimum recommended inductor is 2.7µH. For optimum voltage-positioning load transients, choose an inductor with DC series resistance in the 50mΩ to 150mΩ range. For higher efficiency at heavy loads (above 200mA), or minimal load regulation (but some transient overshoot), the resistance should be kept below 100mΩ. The DC current rating of the inductor should be at least equal to the maximum load current plus half the ripple current to prevent core saturation (2000mA+200mA)

Input Capacitor Selection

The input capacitor reduces the surge current drawn from the input and switching noise from the device. The input capacitor impedance at the switching frequency shall be less than input source impedance to prevent high frequency switching current passing to the input. A low ESR input capacitor sized for maximum RMS current must be used. Ceramic capacitors with X5R or X7R dielectrics are highly recommended because of their low ESR and small temperature coefficients. A 10µF ceramic capacitor for most applications is sufficient.

Output Capacitor Selection

The output capacitor is required to be 10uF×2 to keep the output voltage ripple small and to ensure regulation loop stability. The output capacitor must have low impedance at the switching frequency. Ceramic capacitors with X5R or X7R dielectrics are recommended due to their low ESR and high ripple current

Compensation Capacitor Selection

The compensation capacitors for increasing phase margin provide additional stability. It is required and more than 27pF. Please refer to demo board schematic for design.

Electrical Characteristics Curve

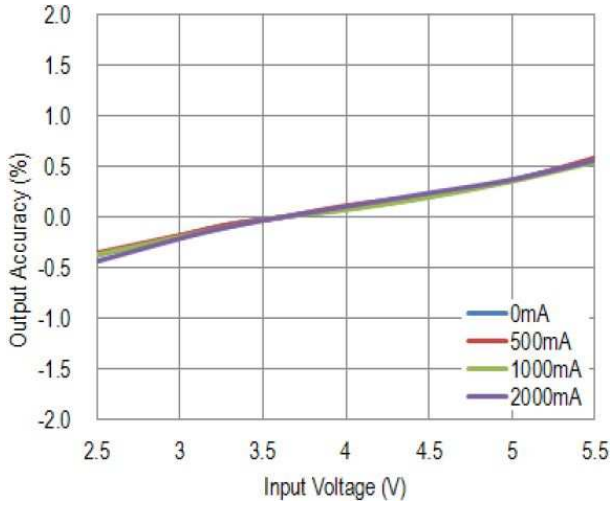

Figure 1. Output Voltage vs. Input Voltage

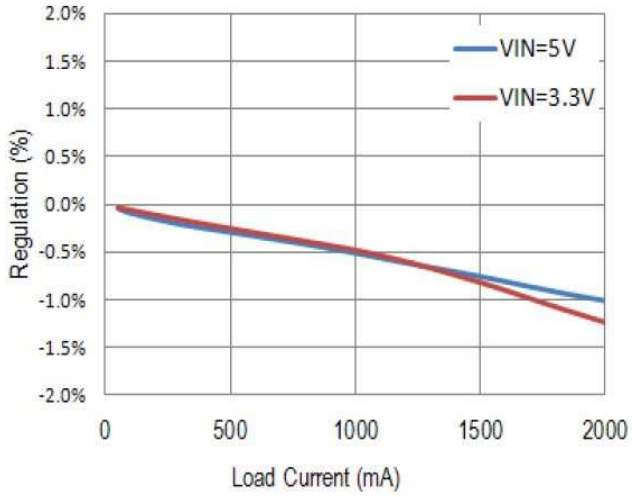

Figure 2. Load Regulation (V_{OUT}=3.3V)

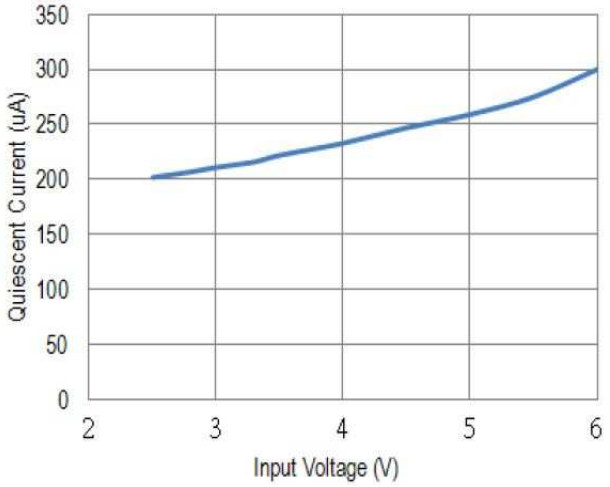

Figure 3. Quiescent Current vs. Input Voltage

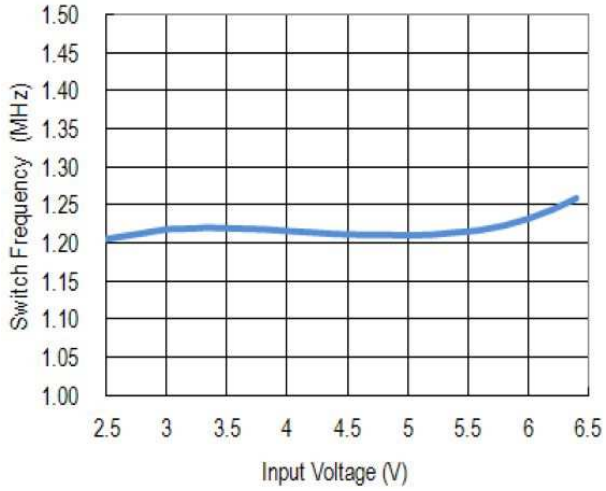

Figure 4. Switching Frequency vs. Input Voltage

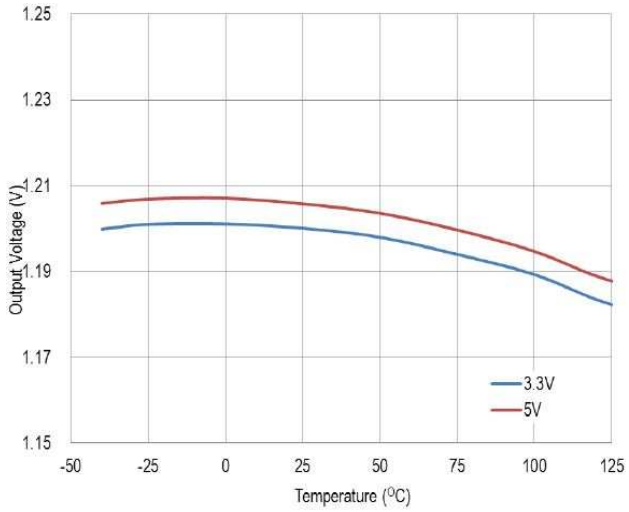

Figure 5. Output Voltage vs. Temperature

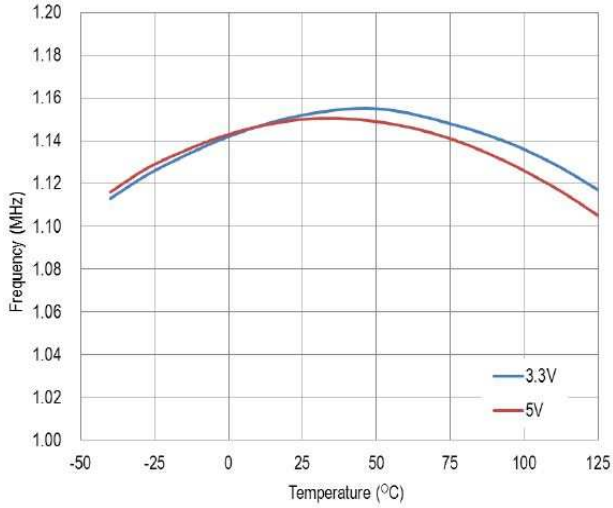

Figure 6. Quiescent Current vs. Temperature

Electrical Characteristics Curve

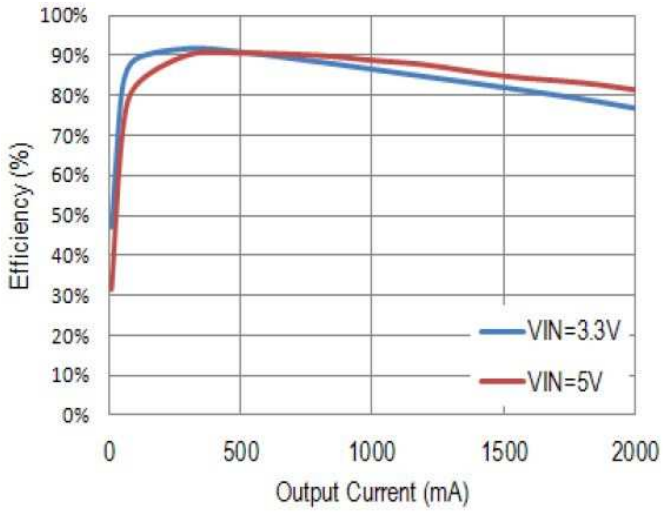

Figure 7. Frequency vs. Temperature

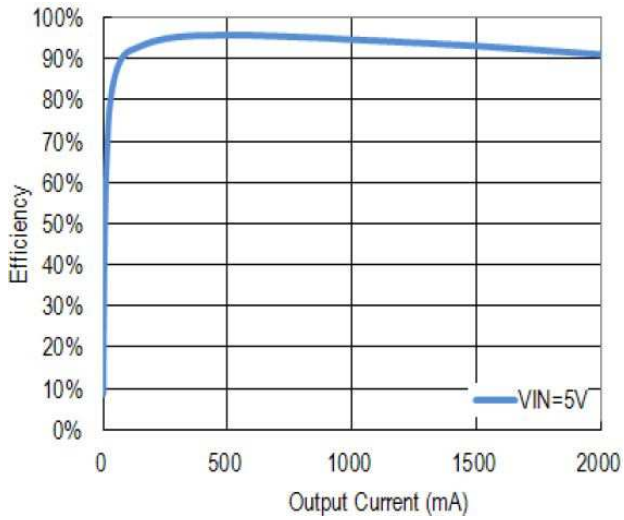

Figure 8. Efficiency vs. Output Current

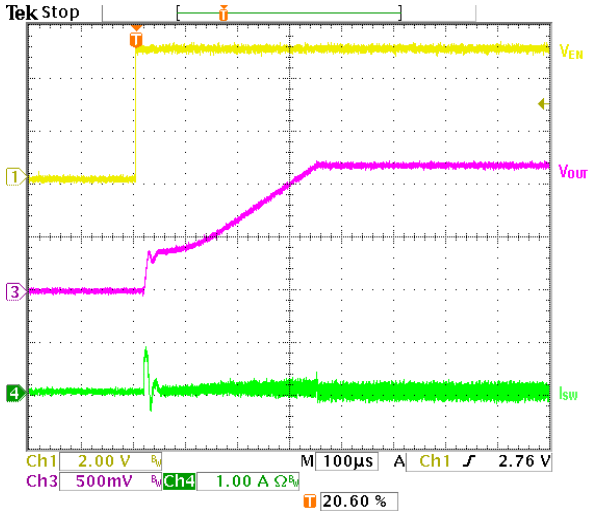

Figure 9. V_{IN} = 5V, V_{OUT} = 1.2V, No Load

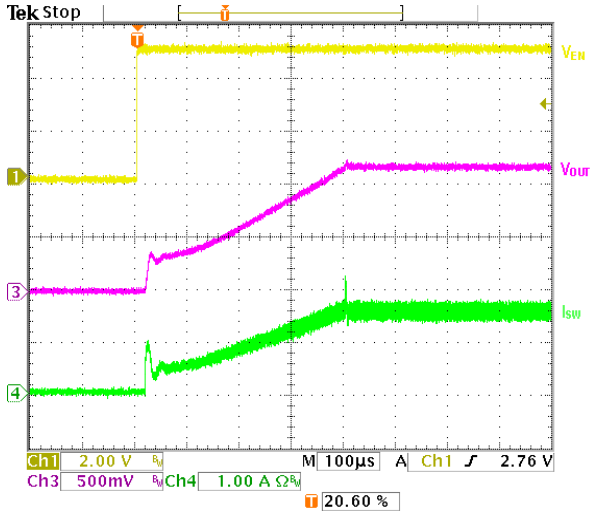

Figure 10. V_{IN} = 5V, V_{OUT} = 1.2V, R_{LOAD}=0.5ohm

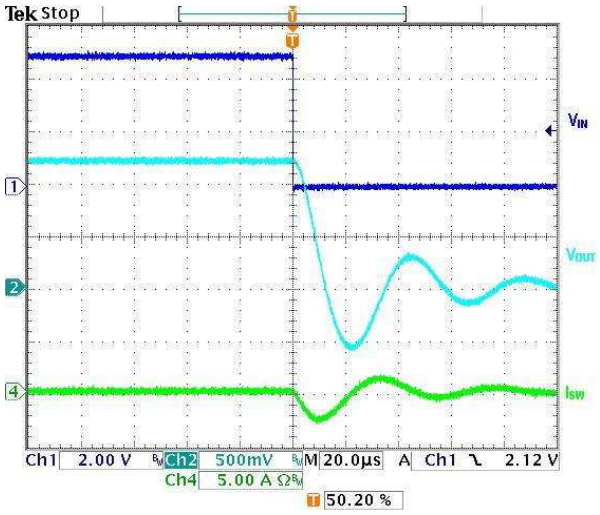

Figure 11. V_{IN} = 3.3V, V_{OUT} = 1.2V, No Load

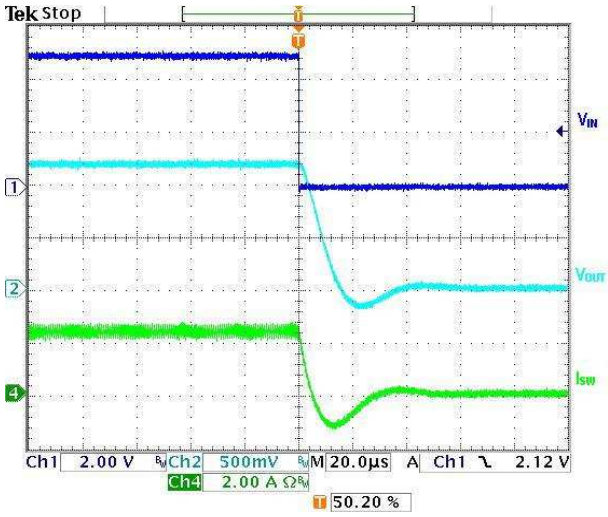

Figure 12. V_{IN} = 5V, V_{OUT} = 1.2V, R_{LOAD}=0.5ohm

Electrical Characteristics Curve

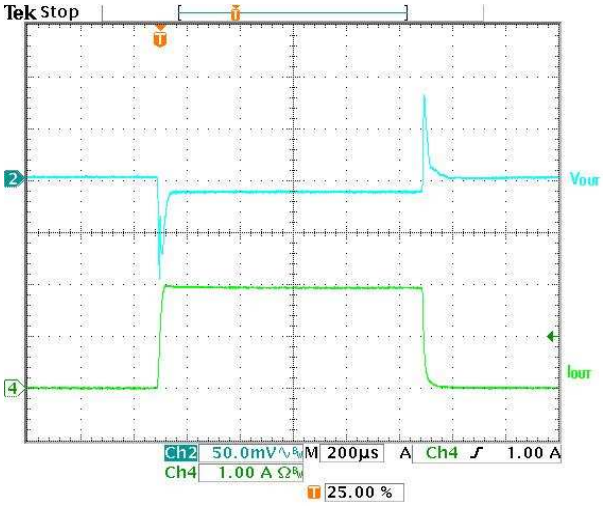

Figure 13. V_{IN} = 3.3V, V_{OUT} = 1.2V, I_{OUT}=0~2A

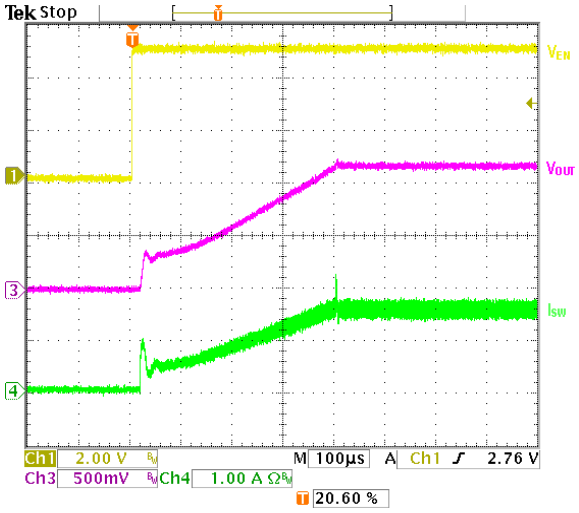

Figure 14. V_{IN} = 5V, V_{OUT} = 1.2V, I_{OUT}=0~2A

SOT-26 Mechanical Drawing

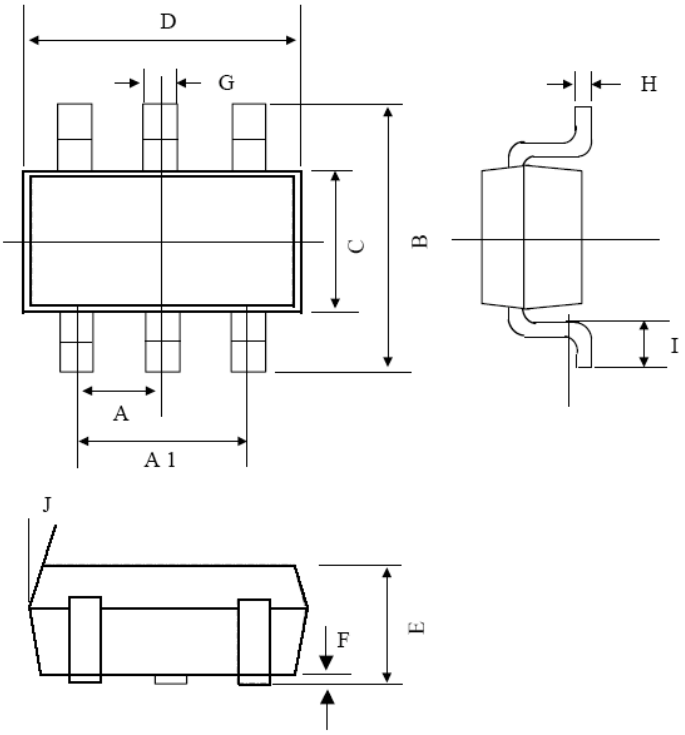

SOT-26 DIMENSION						
DIM	MILLIMETERS			INCHES		
	MIN	TYP	MAX	MIN	TYP	MAX
A	0.95 BSC			0.0374 BSC		
A1	1.9 BSC			0.0748 BSC		
B	2.60	2.80	3.00	0.1024	0.1102	0.1181
C	1.40	1.50	1.70	0.0551	0.0591	0.0669
D	2.80	2.90	3.10	0.1101	0.1142	0.1220
E	1.00	1.10	1.20	0.0394	0.0433	0.0472
F	0.00	--	0.10	0.00		0.0039
G	0.35	0.40	0.50	0.0138	0.0157	0.0197
H	0.10	0.15	0.20	0.0039	0.0059	0.0079
I	0.30	--	0.60	0.0118	--	0.0236
J	5º	--	10º	5º	--	10º

arking Diagram

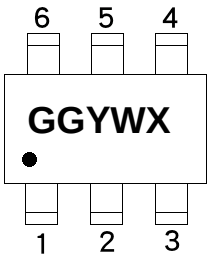

GG = Device Code
Y = Year Code
2 = 2012
3 = 2013
W = Week Code
01 ~ 26 (A~Z)
27 ~ 52 (a~z)
X = Internal ID Code

Notice

Specifications of the products displayed herein are subject to change without notice. TSC or anyone on its behalf, assumes no responsibility or liability for any errors or inaccuracies.

Information contained herein is intended to provide a product description only. No license, express or implied, to any intellectual property rights is granted by this document. Except as provided in TSC's terms and conditions of sale for such products, TSC assumes no liability whatsoever, and disclaims any express or implied warranty, relating to sale and/or use of TSC products including liability or warranties relating to fitness for a particular purpose, merchantability, or infringement of any patent, copyright, or other intellectual property right.

The products shown herein are not designed for use in medical, life-saving, or life-sustaining applications. Customers using or selling these products for use in such applications do so at their own risk and agree to fully indemnify TSC for any damages resulting from such improper use or sale.