TS2580

2A / 52KHz Buck Switching Regulator

SOP-8

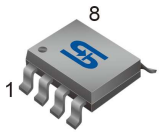

Pin Definition:

1. VIN	8. GND
2. VOUT	7. GND
3. ADJ	6. GND
4. EN	5. GND

General Description

TS2580 Series are step-down switching regulators with all required active functions. It is capable of driving 2A load with excellent line and load regulations. These devices are available for adjustable output version. TS2580 series operates at a switching frequency of 52kHz thus allowing smaller sized filter components than what would be needed with lower frequency switching regulators. It substantially not only reduces the area of board size but also the size of heat sink, and in some cases no heat sink is required. The ±4% tolerance on output voltage within specified input voltages and output load conditions is guaranteed. Also, the oscillator frequency accuracy is within ±10%. External shutdown is included. Featuring 100μA (typical) standby current. The output switch includes cycle-by-cycle current limiting, as well as thermal shutdown for full protection under fault conditions.

Features

- Adjustable Output Voltage Range 1.23V~38.5V
- 52kHz fixed switching frequency
- Voltage Mode Non-synchronous PWM control
- Thermal Shutdown and Current Limit Protection
- ON/OFF Shutdown Control Input
- Short Circuit Protect (SCP)
- Operating Voltage Can be up to 40V
- Output Load Current 2A
- Low Power Standby Mode

Ordering Information

Part No.	Package	Packing
TS2580CS RL	SOP-8	2.5kpcs / 13" Reel
TS2580CS RLG	SOP-8	2.5kpcs / 13" Reel

Note: "G" denotes Halogen Free Product.

Application

- Simple High-efficiency Step down Regulator
- Charger
- Positive to Negative Converter

Absolute Maximum Rating

Parameter	Symbol	Limit	Unit
Maximum Supply Voltage	V_{CC}	+45	V
Recommend Operating Supply Voltage	V_{OP}	4.5 to 40	V
SW, EN Pin Input Voltage	V_{SW}, V_{EN}	-0.3 to +40	V
Feedback Pin Voltage	V_{FB}	-0.3 to +25	V
Power Dissipation	P_D	Internally Limited	W
Output Voltage to Ground	V_{OUT}	-1	V
Storage Temperature Range	T_{ST}	-65 to +150	^oC
Operating Temperature Range	T_{OP}	-40 to +125	^oC
ESD Susceptibility (HBM)		2	kV

Thermal Information

Parameter	Symbol	Maximum	Unit
Thermal Resistance (Junction to Case)	Θ_{JC}	20	$^oC/W$
Thermal Resistance (Junction to Ambient)	Θ_{JA}	60	$^oC/W$

Note1: Θ_{JA} is measured on the PCB with minimum copper area.

Note2: Θ_{JA} is measured with the PCB copper area (need connect to GROUND pins) of approximately 0.5 in^2

Electrical Specifications (Ta = 25°C unless otherwise noted, V_{IN}=12V, I_{LOAD} =0.5A)

Parameter		Symbol	Test Condition	Min	Typ	Max	Unit
Output Feedback		V_{FB}	4.5V≤ V_{IN} ≤40V 0.2A≤ I_{LOAD} ≤3A	1.180	1.23	1.280	V
Efficiency		η	V_{IN} =12V, I_{LOAD} =3A, V_{OUT} =3.3V	--	78	--	%
Feedback Bias Current		I_{FB}	V_{FB} = 1.3V (Adjustable Version)	--	10	50	nA
Oscillator Frequency		F_{OSC}		40	52	65	KHz
Current Limit		I_{CL}	Pear Current, no outside circuit V_{FB} =0V force driver on	2.2	--	--	A
Saturation Voltage		V_{SAT}	I_{OUT}=2A, No outside circuit V_{FB} =0V force driver on	--	1.2	1.4	V
ON/OFF Pin Logic Input Threshold Voltage		V_{IL}	Low (regulator ON)	--	1.3	0.6	V
		V_{IH}	High (regulator OFF)	2.0		--	
ON/OFF Pin Logic Input Current		I_L	V_{LOGIC} =2.5V (OFF)	--	-0.1	-10	µA
		I_H	V_{LOGIC} =0V (ON)	--	-0.01	-1	
Maximum Duty Cycle (ON)		DC	V_{FB} =0V force driver on	--	100	--	%
Maximum Duty Cycle (OFF)			V_{FB} =1.5V for ADJ version force driver off	--	0	--	
Quiescent Current		I_Q	V_{FB} =1.5V force driver off	--	4	8	mA
Standby Quiescent Current		I_{STBY}	ON/OFF pin=5V V_{IN} =40V	--	100	200	µA
SW Pin Leakage Current	SW pin=0V	I_{SWL}	No outside circuit, V_{FB} =1.5V for ADJ version force force driver off	--	--	-200	uA
	SW pin=-0.8B		V_{IN} =40V force driver off	--	-5	--	mA

Block Diagram

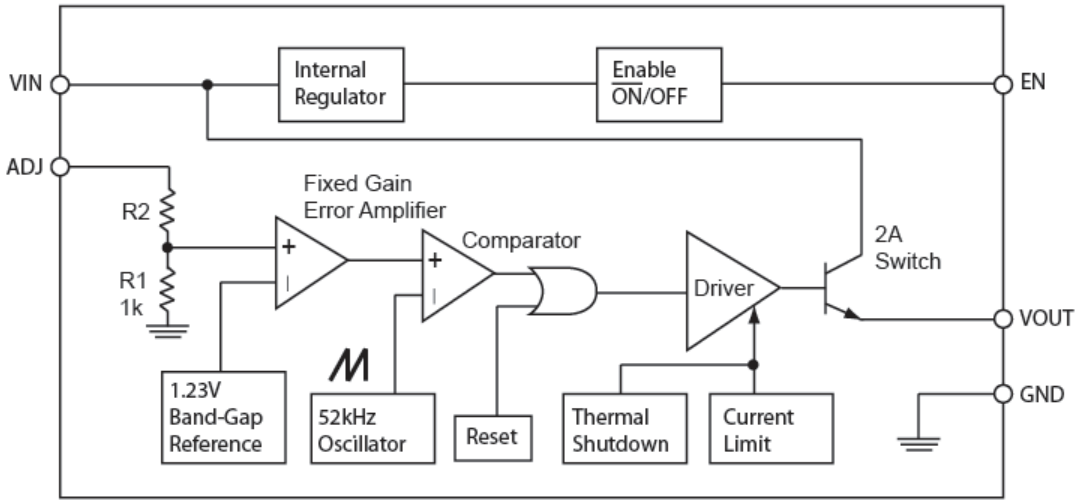

Pin Function Description

VIN
This is the positive input supply for the IC switching regulator. A suitable input bypass capacitor must be presented at this pin to minimize voltage transients and to supply the switching currents needed by the regulator.

Ground
Circuit ground

SW Output
Internal switch. The voltage at this pin switches between (+Vcc – Vsat) and approximately – 0.5V, with a duty cycle of approximately Vout / Vcc. To minimize coupling to sensitive circuitry, the PC board copper area connected to this pin should be minimized.

Adjustable
Adjustment Input

Enable
Allows the switching regulator circuit to be shutdown using logic level signals thus dropping the total input supply current to approximately 100uA. Pulling this pin below a threshold voltage of approximately 1.3V turns the regulator on, and pulling this pin above 1.3V (up to a maximum of Vcc) shuts the regulator down. If this shutdown feature is not needed, the EN pin can be wired to the ground pin.

Typical Application Circuit

1. Adjustable output voltage version

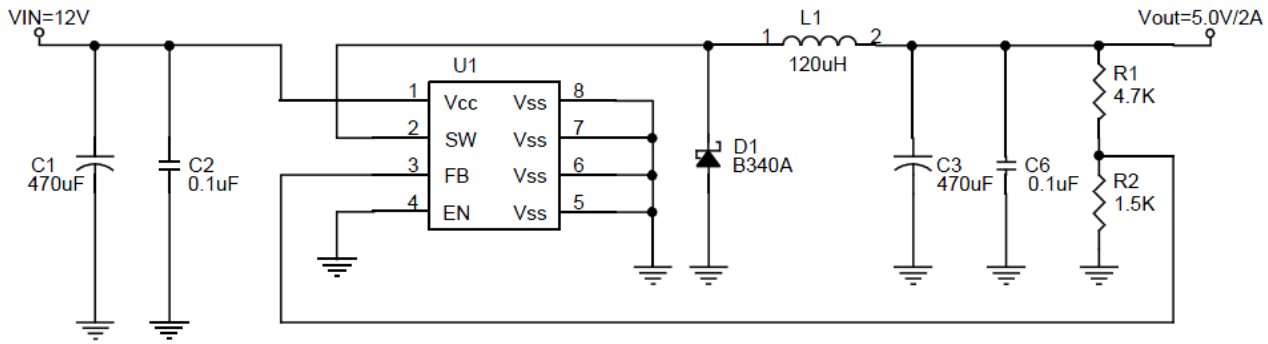

Resistor select for output voltage setting

Vout	R1	R2
5V	4.7K	1.5K
	5.6K	1.8K
3.3V	2.5K	1.5K
	3.0K	1.8K
2.5V	1.8K	1.8K
1.8V	0.82K	1.8K

L1 recommend value (I_{OUT}=2A)				
Vout	**2.5V**	**3.3V**	**5V**	**12V**
V_{IN}=12V	120uH	120uH	120uH	NA
V_{IN}=24V	120uH	120uH	120uH	150uH

SOP-8 Mechanical Drawing

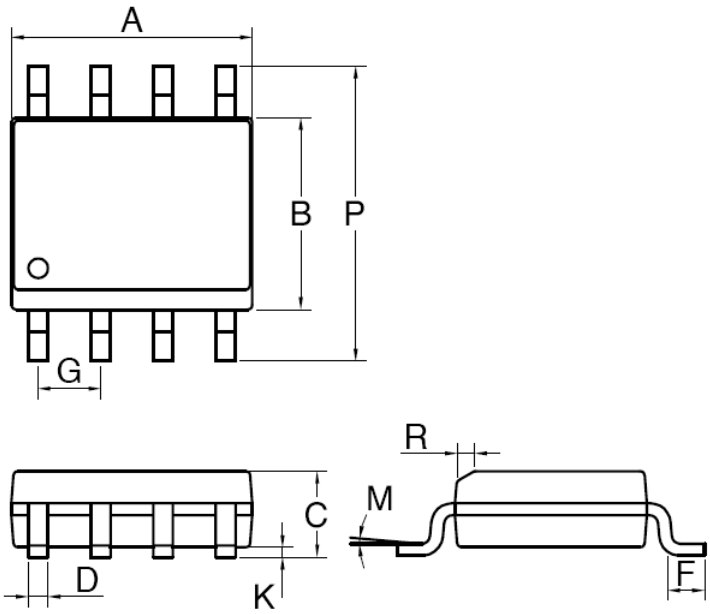

SOP-8 DIMENSION				
DIM	MILLIMETERS		INCHES	
	MIN	MAX	MIN	MAX.
A	4.80	5.00	0.189	0.196
B	3.80	4.00	0.150	0.157
C	1.35	1.75	0.054	0.068
D	0.35	0.49	0.014	0.019
F	0.40	1.25	0.016	0.049
G	1.27BSC		0.05BSC	
K	0.10	0.25	0.004	0.009
M	0º	7º	0º	7º
P	5.80	6.20	0.229	0.244
R	0.25	0.50	0.010	0.019

Marking Diagram

Y = Year Code
M = Month Code
(**A**=Jan, **B**=Feb, **C**=Mar, **D**=Apl, **E**=May, **F**=Jun, **G**=Jul, **H**=Aug, **I**=Sep, **J**=Oct, **K**=Nov, **L**=Dec)
= Month Code for Halogen Free Product
(**O**=Jan, **P**=Feb, **Q**=Mar, **R**=Apl, **S**=May, **T**=Jun, **U**=Jul, **V**=Aug, **W**=Sep, **X**=Oct, **Y**=Nov, **Z**=Dec)
L = Lot Code

Notice

Specifications of the products displayed herein are subject to change without notice. TSC or anyone on its behalf, assumes no responsibility or liability for any errors or inaccuracies.

Information contained herein is intended to provide a product description only. No license, express or implied, to any intellectual property rights is granted by this document. Except as provided in TSC's terms and conditions of sale for such products, TSC assumes no liability whatsoever, and disclaims any express or implied warranty, relating to sale and/or use of TSC products including liability or warranties relating to fitness for a particular purpose, merchantability, or infringement of any patent, copyright, or other intellectual property right.

The products shown herein are not designed for use in medical, life-saving, or life-sustaining applications. Customers using or selling these products for use in such applications do so at their own risk and agree to fully indemnify TSC for any damages resulting from such improper use or sale.