TS13003B

High Voltage NPN Transistor

TO-92

Pin Definition:
1. Emitter
2. Collector
3. Base

PRODUCT SUMMARY

BV_{CEO}	400V
BV_{CBO}	700V
I_C	1.5A
$V_{CE(SAT)}$	0.8V @ I_C / I_B = 0.5A / 0.1A

Features

- High Voltage
- High Speed Switching

Structure

- Silicon Triple Diffused Type
- NPN Silicon Transistor

Block Diagram

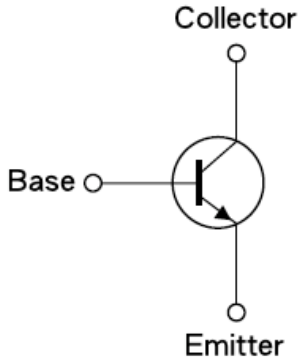

Ordering Information

Part No.	Package	Packing
TS13003BCT B0	TO-92	1Kpcs / Bulk
TS13003BCT B0G	TO-92	1Kpcs / Bulk
TS13003BCT A3	TO-92	2Kpcs / Ammo
TS13003BCT A3G	TO-92	2Kpcs / Ammo

Note: “G” denote for Green Product

Absolute Maximum Rating (Ta = 25°C unless otherwise noted)

Parameter		Symbol	Limit	Unit
Collector-Base Voltage		V_{CBO}	700V	V
Collector-Emitter Voltage		V_{CEO}	400V	V
Emitter-Base Voltage		V_{EBO}	9	V
Collector Current	DC	I_C	1.5	A
	Pulse		3	
Collector Power Dissipation		P_D	1.5	W
Operating Junction Temperature		T_J	+150	°C
Operating Junction and Storage Temperature Range		T_{STG}	- 55 to +150	°C

Thermal Performance

Parameter	Symbol	Limit	Unit
Junction to Ambient Thermal Resistance	$R\Theta_{JA}$	121.4	°C/W
Junction to Case Thermal Resistance	$R\Theta_{JC}$	36.2	°C/W

Electrical Specifications (Ta = 25°C unless otherwise noted)

Parameter	Conditions	Symbol	Min	Typ	Max	Unit
Static						
Collector-Base Voltage	I_C = 1mA, I_B = 0	BV_{CBO}	700	--	--	V
Collector-Emitter Breakdown Voltage	I_C = 10mA, I_E = 0	BV_{CEO}	400	--	--	V
Emitter-Base Breakdown Voltage	I_E = 1mA, I_C = 0	BV_{EBO}	9	--	--	V
Collector-Emitter Cutoff Current	V_{CE} = 400V, I_B = 0	I_{CEO}	--	--	1	uA
Collector-Emitter Cutoff Current @45°C	V_{CE} = 400V, I_B = 0	I_{CEO}	--	0.5	--	uA
Collector Cutoff Current	V_{CB} = 700V, I_E = 0	I_{CBO}	--	--	1	uA
Collector Cutoff Current @45°C	V_{CB} = 700V, I_E = 0	I_{CBO}	--	0.2	--	uA
Emitter Cutoff Current	V_{EB} = 9V, I_C = 0	I_{EBO}	--	0.1	1	uA
Collector-Emitter Saturation Voltage	I_C / I_B = 0.5A / 0.1A	$V_{CE(SAT)1}$	--	0.2	0.5	V
	I_C / I_B = 1.0A / 0.25A	$V_{CE(SAT)2}$	--	0.3	1	
	I_C / I_B = 1.5A / 0.5A	$V_{CE(SAT)3}$	--	0.5	3	
Base-Emitter Saturation Voltage	I_C / I_B = 0.5A / 0.1A	$V_{BE(SAT)1}$	--	--	1.1	V
	I_C / I_B = 1.0A / 0.25A	$V_{BE(SAT)2}$	--	--	1.3	
DC Current Gain	V_{CE} = 2V, I_C = 10μA	$h_{FE}1$	20	--	--	
	V_{CE} = 2V, I_C = 400mA	$h_{FE}2$	23	--	35	
	V_{CE} = 2V, I_C = 1A	$h_{FE}3$	6	--	20	
Dynamic						
Frequency	V_{CE} = 10V, I_C = 0.1A	f_T	4	--	--	MHz
Output Capacitance	V_{CB} = 10V, f = 0.1MHz	Cob	--	21	--	pF
Resistive Load Switching Time (Ratings)						
Delay Time	V_{CC} = 125V, I_C = 1A, I_{B1} = I_{B2} = 200mA, t_p = 25uS Duty Cycle ≤1%	t_d	--	0.05	0.2	uS
Rise Time		t_r	--	0.6	1	uS
Storage Time		t_{STG}	--	2	4	uS
Fall Time		t_f	--	0.2	0.4	uS

Note: pulse test: pulse width ≤300uS, duty cycle ≤2%

Electrical Characteristics Curve (Ta = 25°C, unless otherwise noted)

Figure 1. Static Characteristics

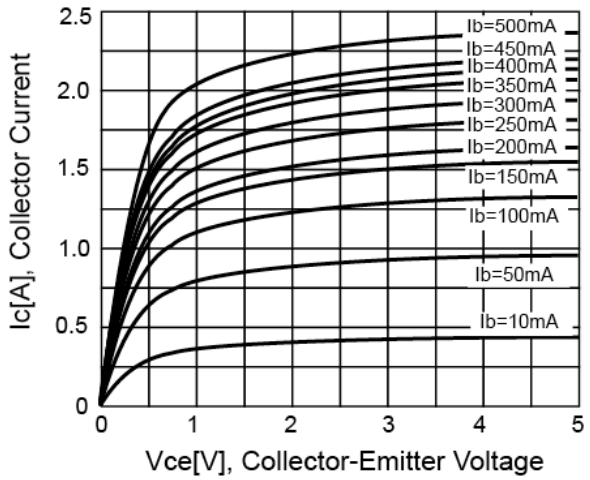

Figure 2. DC Current Gain

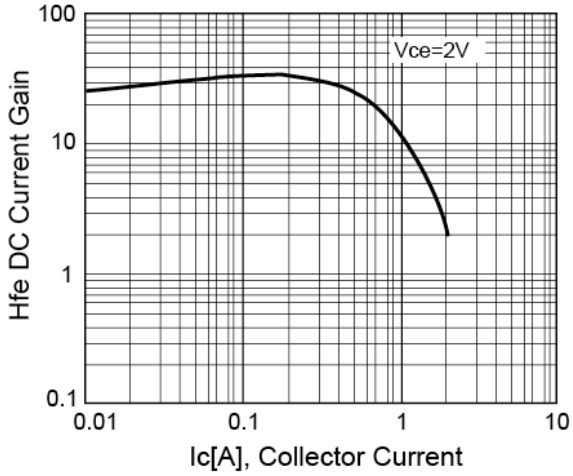

Figure 3. $V_{CE(SAT)}$ v.s. $V_{BE(SAT}$

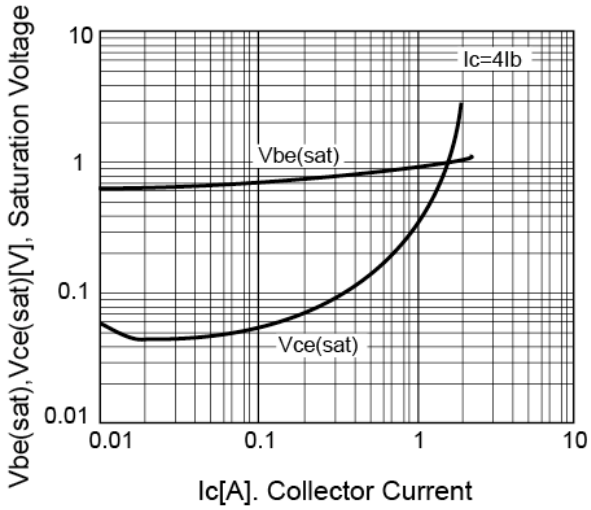

Figure 4. Power Derating

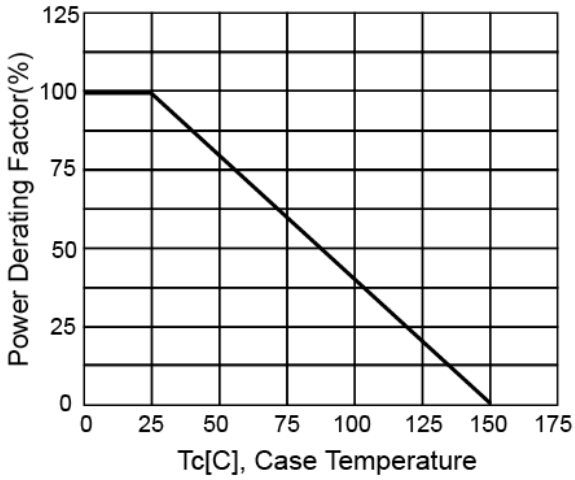

Figure 5. Reverse Bias SOA

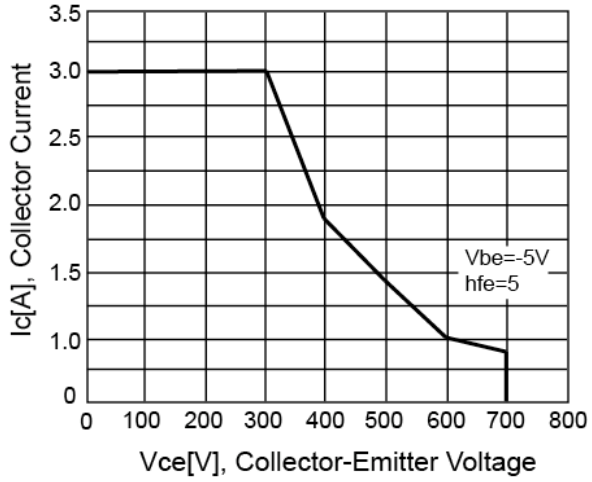

Figure 6. Safety Operating Area

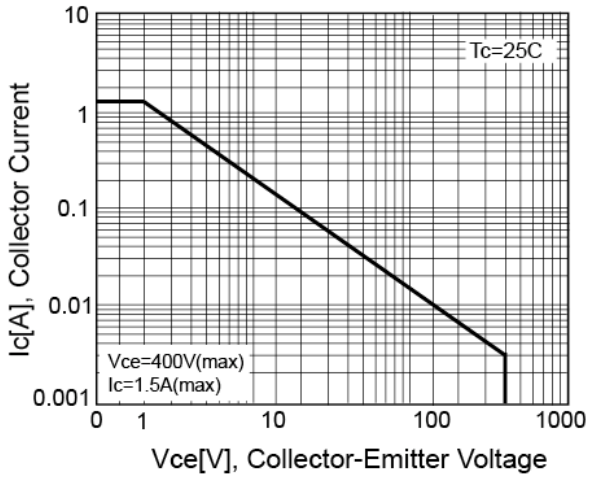

TO-92 Mechanical Drawing

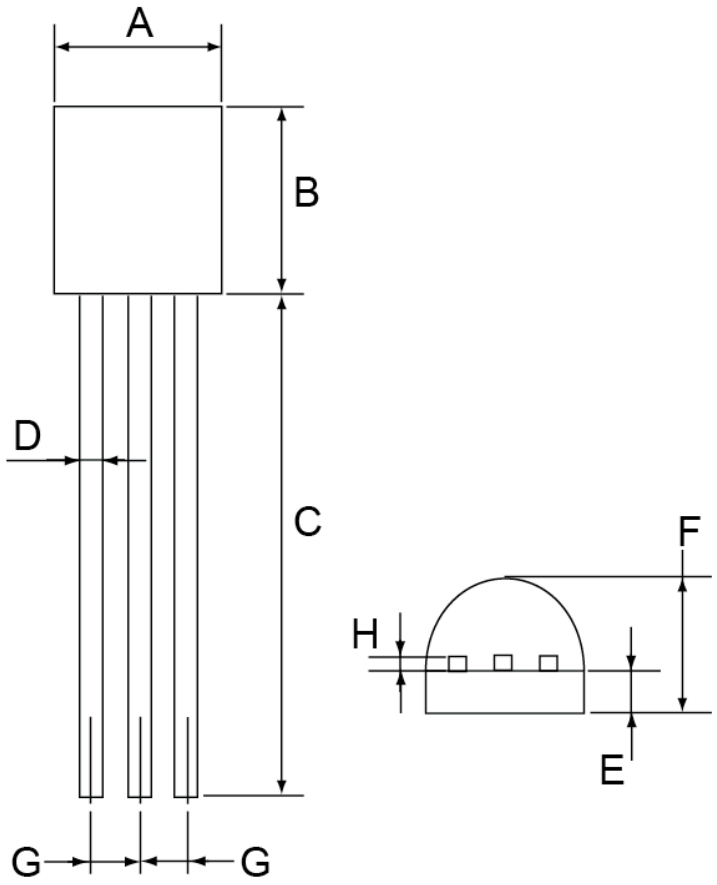

TO-92 DIMENSION				
DIM	MILLIMETERS		INCHES	
	MIN	MAX	MIN	MAX
A	4.30	4.70	0.169	0.185
B	4.30	4.70	0.169	0.185
C	13.53 (typ)		0.532 (typ)	
D	0.39	0.49	0.015	0.019
E	1.18	1.28	0.046	0.050
F	3.30	3.70	0.130	0.146
G	1.27	1.31	0.050	0.051
H	0.33	0.43	0.013	0.017

Marking Diagram

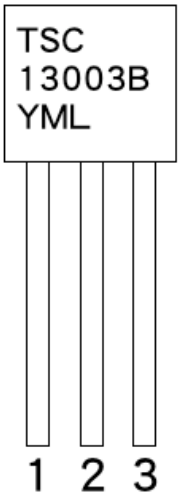

Y = Year Code
M = Month Code
(**A**=Jan, **B**=Feb, **C**=Mar, **D**=Apl, **E**=May, **F**=Jun, **G**=Jul, **H**=Aug, **I**=Sep, **J**=Oct, **K**=Nov, **L**=Dec)
= Month Code for Halogen Free Product
(**O**=Jan, **P**=Feb, **Q**=Mar, **R**=Apl, **S**=May, **T**=Jun, **U**=Jul, **V**=Aug, **W**=Sep, **X**=Oct, **Y**=Nov, **Z**=Dec)
L = Lot Code

Notice

Specifications of the products displayed herein are subject to change without notice. TSC or anyone on its behalf, assumes no responsibility or liability for any errors or inaccuracies.

Information contained herein is intended to provide a product description only. No license, express or implied, to any intellectual property rights is granted by this document. Except as provided in TSC's terms and conditions of sale for such products, TSC assumes no liability whatsoever, and disclaims any express or implied warranty, relating to sale and/or use of TSC products including liability or warranties relating to fitness for a particular purpose, merchantability, or infringement of any patent, copyright, or other intellectual property right.

The products shown herein are not designed for use in medical, life-saving, or life-sustaining applications. Customers using or selling these products for use in such applications do so at their own risk and agree to fully indemnify TSC for any damages resulting from such improper use or sale.