TAIWAN SEMICONDUCTOR
The Smartest Choice

HER201 - HER207

2.0AMPS High Efficient Rectifiers

DO-15

Features

- High efficiency, Low VF
- High current capability
- High reliability
- High surge current capability
- For use in low voltage, high frequency inverter, free wheeling, and polarity protection application
- Green compound with suffix "G" on packing code & prefix "G" on datecode

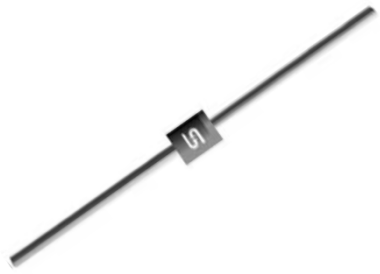

Pb-Free

RoHS COMPLIANT

Mechanical Data

- Case: Molded plastic
- Epoxy: UL 94V-0 rate flame retardant
- Lead: Pure tin plated, lead free, solderable per MIL-STD-202, Method 208 guaranteed
- Polarity: Color band denotes cathode
- Solder dip 260℃ max.10s per JESD 22-B106
- Weight: 0.40 grams

Ordering Information (example)

Part No.	Package	Packing	INNER TAPE	Packing code	Packing code (Green)
HER201	DO-15	1.5K / AMMO box	52mm	A0	A0G

Maximum Ratings and Electrical Characteristics

Rating at 25 ℃ ambient temperature unless otherwise specified.

Parameter	Symbol	HER 201	HER 202	HER 203	HER 204	HER 205	HER 206	HER 207	Unit
Maximum Repetitive Peak Reverse Voltage	V_{RRM}	50	100	200	300	400	600	800	V
Maximum RMS Voltage	V_{RMS}	35	70	140	210	280	420	560	V
Maximum DC Blocking Voltage	V_{DC}	50	100	200	300	400	600	800	V
Maximum Average Forward Rectified Current	$I_{F(AV)}$	2							A
Peak Forward Surge Current, 8.3 ms Single Half Sine-wave Superimposed on Rated Load (JEDEC method)	I_{FSM}	60							A
Maximum Instantaneous Forward Voltage (Note 1) @ 2 A	V_F	1.0				1.3	1.7		V
Maximum Reverse Current @ Rated VR T_A=25 ℃ T_A=125 ℃	I_R	5 150							uA
Maximum Reverse Recovery Time (Note 2)	Trr	50					75		nS
Typical Junction Capacitance (Note 3)	Cj	50					35		pF
Typical Thermal Resistance	$R_{\theta jA}$ $R_{\theta jC}$	60 8							^{O}C/W
Operating Temperature Range	T_J	- 55 to + 150							^{O}C
Storage Temperature Range	T_{STG}	- 55 to + 150							^{O}C

Note 1: Pulse Test with PW=300 usec, 1% Duty Cycle

Note 2: Reverse Recovery Test Conditions: IF=0.5A, IR=1.0A, IRR=0.25A

Note 3: Measured at 1 MHz and Applied Reverse Voltage of 4.0V D.C.

RATINGS AND CHARACTERISTIC CURVES (HER201 THRU HER207)

FIG.1 MAXIMUM FORWARD CURRENT DERATING CURVE

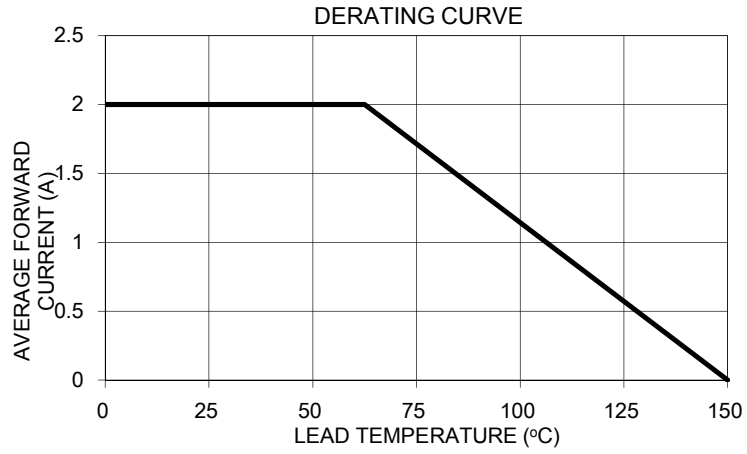

FIG. 2 TYPICAL REVERSE CHARACTERISTICS

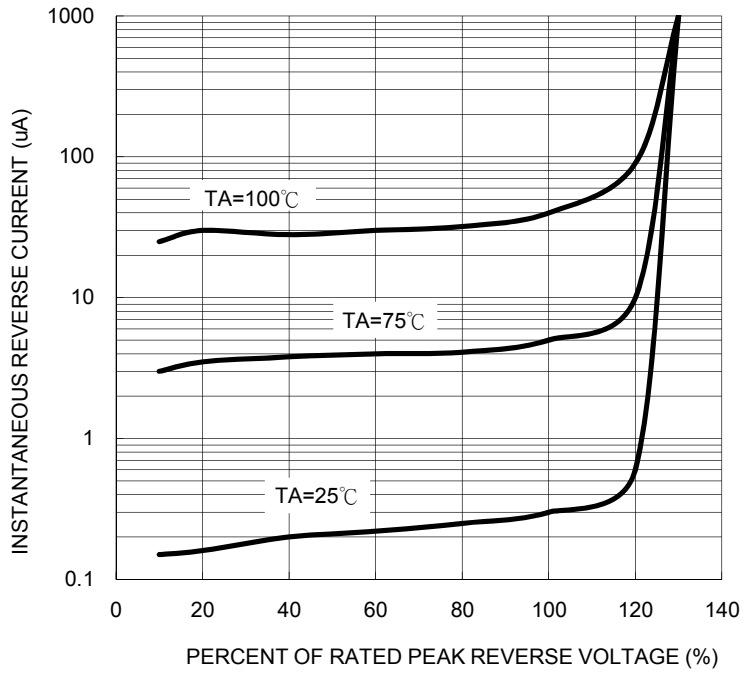

FIG. 3 MAXIMUM NON-REPETITIVE FORWARD SURGE CURRENT

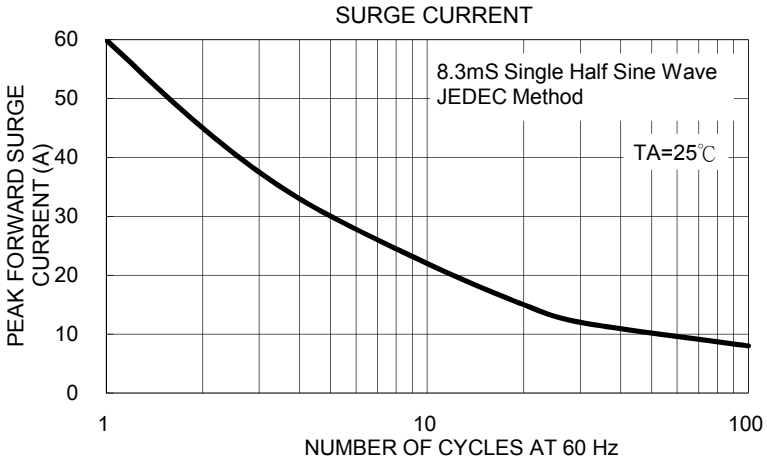

FIG. 5 TYPICAL FORWARD CHARACTERISTICS

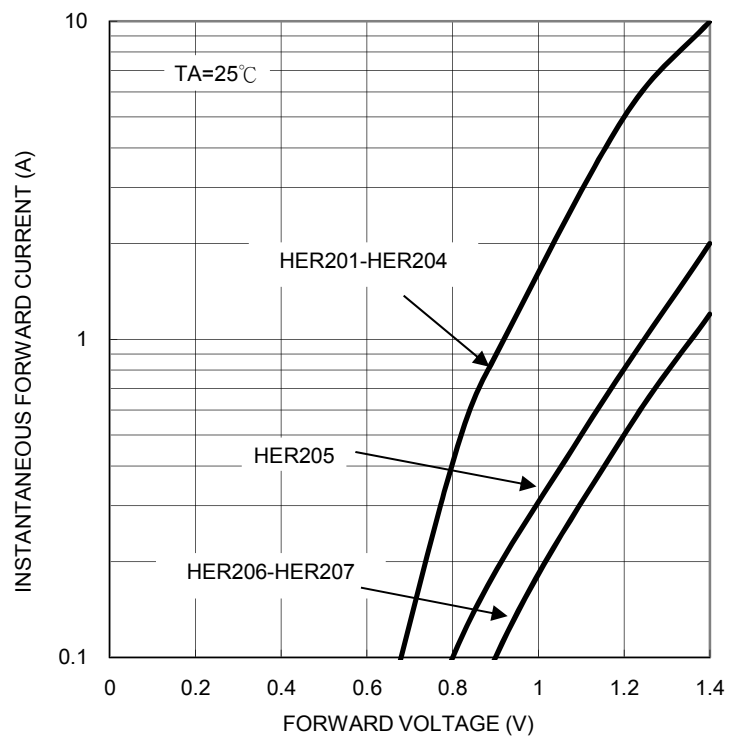

FIG. 4 TYPICAL JUNCTION CAPACITANCE

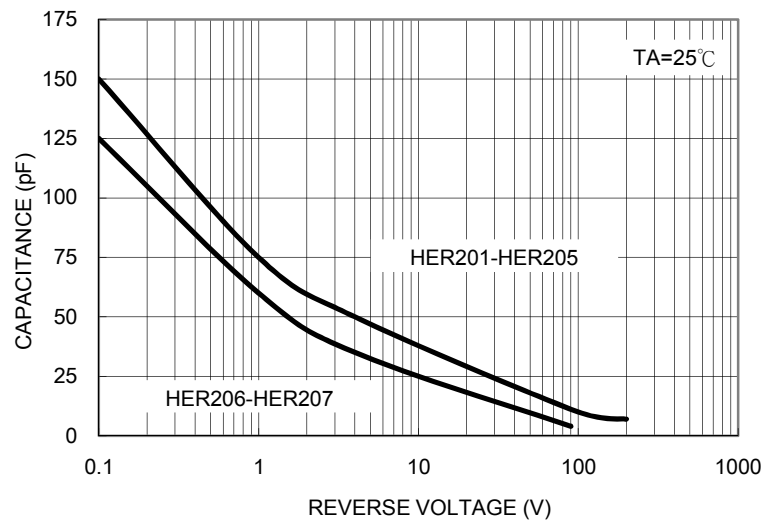

FIG.6- REVERSE RECOVERY TIME CHARACTERISTIC AND TEST CIRCUIT DIAGRAM

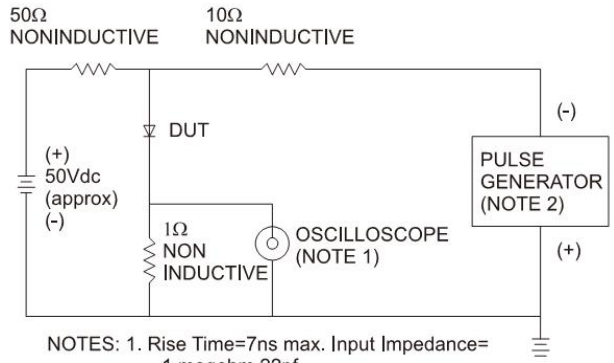

NOTES: 1. Rise Time=7ns max. Input Impedance= 1 megohm 22pf
2. Rise Time=10ns max. Sourse Impedance= 50 ohms

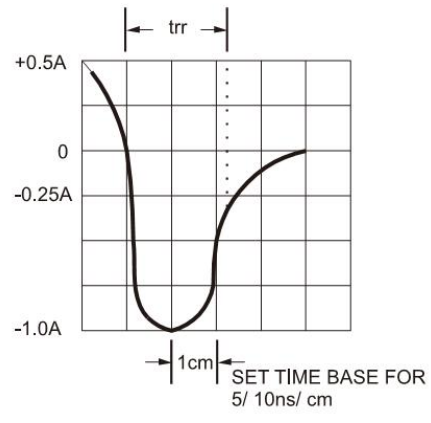

Ordering information

Part No.	Package	Packing	INNER TAPE	Packing code	Packing code (Green)
HER20x (Note)	DO-15	1.5K / AMMO box	52mm	A0	A0G
	DO-15	3.5K / 13" Reel	52mm	R0	R0G
	DO-15	1K / Bulk packing		B0	B0G

Note: "x" is Device Code from "1" thru "7".

AXIAL LEAD TAPING SPECIFICATIONS

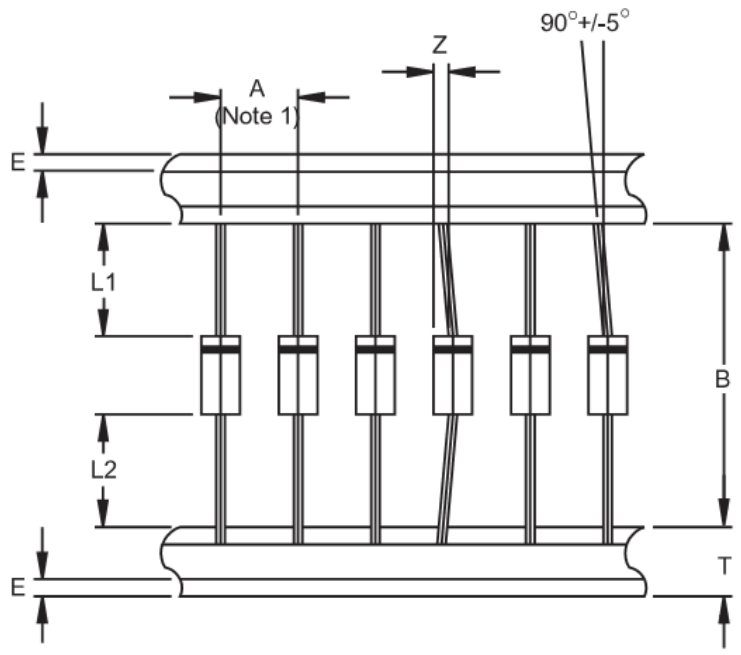

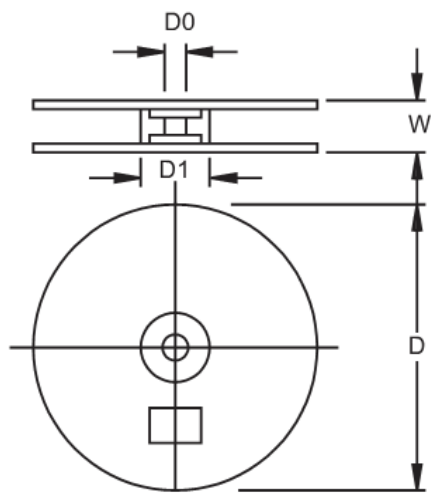

Outline	A	B	Z	T	E	| L1-L2 |	D	D1	D0	W
	±0.5	±1.5	MAX	±0.4	MAX	MAX		±0.3	±0.4	±1.0
DO-15	5	52.4	1.2	6	0.8	1	330	85.7	16.6	76

Unit (mm)

Suggested Mounting Hole Rule

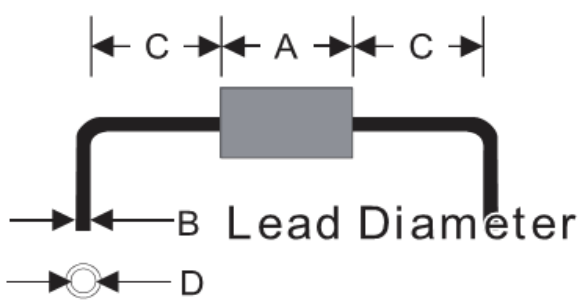

Symbol	Unit(mm)
A	6.4
B	0.8
C	3.0
D	1.2

Dimensions

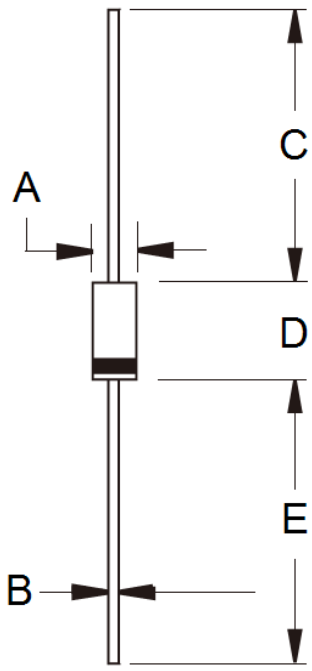

DIM.	Unit(mm)		Unit(inch)	
	Min	Max	Min	Max
A	2.60	3.60	0.102	0.142
B	0.70	0.90	0.028	0.035
C	25.40	-	1.000	-
D	5.80	7.60	0.228	0.299
E	25.40	-	1.000	-

Marking Diagram

P/N = Specific Device Code
G = Green Compound
YWW = Date Code
F = Factory Code