Ultra-High Performance RF Narrowband Transceiver

Applications

- Social Alarms
- Narrowband ultra low power wireless systems with channel spacing down to 4 kHz
- 170 / 315 / 433 / 868 / 915 / 920 / 950 MHz ISM/SRD band systems
- Wireless Metering and Wireless Smart Grid (AMR and AMI)
- IEEE 802.15.4g systems
- Home and building automation
- Wireless alarm and security systems
- Industrial monitoring and control
- Wireless healthcare applications
- Wireless sensor networks and Active RFID
- Private mobile radio

Regulations

Suitable for systems targeting compliance with:

Europe	ETSI EN 300 220 cat. 1 ETSI EN 54-25 ETSI EN 300 113 and EN 301 166
US	FCC CFR47 Part 15, 24, 90, 101
Japan	ARIB RCR STD-T30, T-67, T-108

Key Features

- High performance single chip transceiver
  - Adjacent channel selectivity: 67 dB at 6.25 kHz offset
  - Blocking performance: 104 dB at 10 MHz offset
  - Excellent receiver sensitivity:
    -129 dBm at 300 bps
    -123 dBm at 1.2 kbps
    -110 dBm at 50 kbps
  - Very low phase noise: -115 dBc/Hz at 10 kHz offset
- Suitable for systems targeting ETSI category 1
- High spectral efficiency (9.6 kbps in 12.5 kHz channel in compliance with FCC narrowbanding mandate)
- Power Supply
  - Wide supply voltage range (2.0 V – 3.6 V)
  - Low current consumption:
    - RX: 2 mA in RX Sniff Mode
    - RX: 17 mA peak current in low power mode
    - RX: 26 mA peak current in high performance mode
    - TX: 47 mA at +14 dBm
  - Power down: 0.3 µA
- Programmable output power up to +16 dBm with 0.4 dB step size
- Automatic output power ramping
- Configurable data rates: 0 to 200 kbps
- Supported modulation formats: 2-FSK, 2-GFSK, 4-FSK, 4-GFSK, MSK, OOK
- WaveMatch: Advanced digital signal processing for improved sync detect performance
- RoHS compliant 5x5mm QFN 32 package

Peripherals and Support Functions

- Enhanced Wake-On-Radio functionality for automatic low-power receive polling
- Separate 128-byte RX and TX FIFOs
- Includes functions for antenna diversity support
- Support for re-transmissions
- Support for auto-acknowledge of received packets
- TCXO support and control, also in power modes
- Automatic Clear Channel Assessment (CCA) for listen-before-talk (LBT) systems
- Built in coding gain support for increased range and robustness
- Digital RSSI measurement
- Support for seamless integration with the **CC1190** for increased range giving up to 3 dB improvement in sensitivity and up to +27 dBm output power
- Temperature sensor

Description

The **CC1125** is a fully integrated single-chip radio transceiver designed for high performance at very low power and low voltage operation in cost effective wireless systems. All filters are integrated, removing the need for costly external SAW and IF filters. The device is mainly intended for the ISM (Industrial, Scientific and Medical) and SRD (Short Range Device) frequency bands at 164-192 MHz, 274-320 MHz, 410-480 MHz and 820-960 MHz.

The **CC1125** provides extensive hardware support for packet handling, data buffering, burst transmissions, clear channel assessment, link quality indication and Wake-On-Radio. The **CC1125** main operating parameters can be controlled via an SPI interface. In a typical system, the **CC1125** will be used together with a microcontroller and only few external passive components.

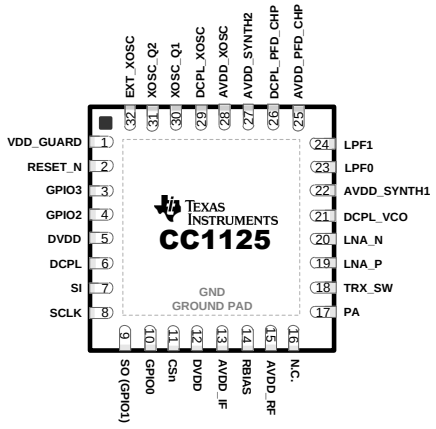

PRODUCTION DATA information is current as of publication date. Products conform to specifications per the terms of Texas Instruments standard warranty. Production processing does not necessarily include testing of all parameters.

Table of Contents

1 ELECTRICAL SPECIFICATIONS 3

1.1 ABSOLUTE MAX RATINGS 3
1.2 GENERAL CHARACTERISTICS 3
1.3 RF CHARACTERISTICS 3
1.4 REGULATORY STANDARDS 4
1.5 CURRENT CONSUMPTION, STATIC MODES 5
1.6 CURRENT CONSUMPTION, TRANSMIT MODES 5
1.7 CURRENT CONSUMPTION, RECEIVE MODES 6
1.8 RECEIVE PARAMETERS 7
1.9 TRANSMIT PARAMETERS 13
1.10 PLL PARAMETERS 14
1.11 WAKE-UP AND TIMING 15
1.12 HIGH SPEED CRYSTAL OSCILLATOR 15
1.13 HIGH SPEED CLOCK INPUT (TCXO) 15
1.14 32 KHZ CLOCK INPUT 16
1.15 LOW SPEED RC OSCILLATOR 16
1.16 I/O AND RESET 16
1.17 TEMPERATURE SENSOR 16

2 TYPICAL PERFORMANCE CURVES 17

3 PIN CONFIGURATION 20

4 BLOCK DIAGRAM 21

4.1 FREQUENCY SYNTHESIZER 21
4.2 RECEIVER 21
4.3 TRANSMITTER 22
4.4 RADIO CONTROL AND USER INTERFACE 22
4.5 ENHANCED WAKE-ON-RADIO (EWOR) 22
4.6 SNIFF MODE 22
4.7 ANTENNA DIVERSITY 23

5 TYPICAL APPLICATION CIRCUIT 24

6 HISTORY 25

PRODUCTION DATA information is current as of publication date. Products conform to specifications per the terms of Texas Instruments standard warranty. Production processing does not necessarily include testing of all parameters.

1 Electrical Specifications

All measurements performed on CC1120EM_868_915 rev.1.0.1, CC1120EM_955 rev.1.2.1, CC1120EM_420_470 rev.1.0.1 or CC1120EM_169 rev.1.2 (f_{xosc} = 32 MHz), and CC1125EM_868_915 rev.1.1.0, CC1125EM_420_470 rev.1.1.0, CC1125EM_169 rev.1.1.0, CC1125EM-Cat1-868 (f_{xosc} = 40 MHz)

1.1 Absolute Max Ratings

Parameter	Min	Typ	Max	Unit	Condition
Supply Voltage ("VDD")	-0.3		3.9	V	
Storage Temperature Range	-40		125	°C	
Solder Reflow Temperature			260	°C	According to IPC/JEDEC J-STD-020
ESD			2000	V	HBM
ESD			500	V	CDM
Moisture Sensitivity Level			MSL3		
Input RF level			+10	dBm	
Voltage on Any Digital Pin	-0.3		VDD+0.3 max 3.9	V	
Voltage on Analog Pins (including "DCPL" pins)	-0.3		2.0	V	

1.2 General Characteristics

Parameter	Min	Typ	Max	Unit	Condition
Voltage Supply Range	2.0		3.6	V	
Temperature Range	-40		85	°C	

1.3 RF Characteristics

Parameter	Min	Typ	Max	Unit	Condition
Frequency Bands	820		960	MHz	
	410		480	MHz	
	274		320	MHz	Please see application note SWRA398 for more information
	164		192	MHz	
Frequency Resolution		30		Hz	In 820-960 MHz band
		15		Hz	In 410-480 MHz band
		6		Hz	In 164-192 MHz band
Datarate	0		200	kbps	Packet mode
	0		100	kbps	Transparent mode
Datarate Step Size		1e-4		bps	

PRODUCTION DATA information is current as of publication date. Products conform to specifications per the terms of Texas Instruments standard warranty. Production processing does not necessarily include testing of all parameters.

1.4 Regulatory Standards

Performance Mode	Frequency Band	Suitable for compliance with	Comments
High Performance Mode	820 – 960 MHz	ARIB T-108 ARIB T-96 ETSI EN 300 220 category 1 ETSI EN 54-25 FCC PART 101 FCC PART 24 SUBMASK D FCC PART 15.247 FCC PART 15.249 FCC PART 90 MASK G FCC PART 90 MASK J	Performance also suitable for systems targeting maximum allowed output power in the respective bands, using a range extender such as the CC1190
	410 – 480 MHz	ARIB T-67 ARIB RCR STD-30 ETSI EN 301 166 ETSI EN 300 113 ETSI EN 300 220 category 1 FCC PART 90 MASK D FCC PART 90 MASK E FCC PART 90 MASK G	Performance also suitable for systems targeting maximum allowed output power in the respective bands, using a range extender
	164 – 192 MHz	ETSI EN 300 220 category 1 ETSI EN 301 166 ETSI EN 300 113 FCC PART 90 MASK C FCC PART 90 MASK D FCC PART 90 MASK E	Performance also suitable for systems targeting maximum allowed output power in the respective bands, using a range extender
Low Power Mode	820 – 960 MHz	ETSI EN 300 220 category 2 FCC PART 15.247 FCC PART 15.249	
	410 – 480 MHz	ETSI EN 300 220 category 2	
	164 – 192 MHz	ETSI EN 300 220 category 2	

PRODUCTION DATA information is current as of publication date. Products conform to specifications per the terms of Texas Instruments standard warranty. Production processing does not necessarily include testing of all parameters.

1.5 Current Consumption, Static Modes

T_A = 25°C, VDD = 3.0 V, f_{xosc} = 32 MHz if nothing else stated

Parameter	Min	Typ	Max	Unit	Condition
Power Down with Retention		0.3	1	µA	
		0.5		µA	Low-power RC oscillator running
XOFF Mode		170		µA	Crystal oscillator / TCXO disabled
IDLE Mode		1.3		mA	Clock running, system waiting with no radio activity

1.6 Current Consumption, Transmit Modes

950 MHz band (High Performance Mode)

T_A = 25°C, VDD = 3.0 V, f_{xosc} = 32 MHz if nothing else stated

Parameter	Min	Typ	Max	Unit	Condition
TX Current Consumption +10 dBm		37		mA	
TX Current Consumption 0 dBm		26		mA	

868/915/920 MHz bands (High Performance Mode)

T_A = 25°C, VDD = 3.0 V, f_{xosc} = 40 MHz if nothing else stated

Parameter	Min	Typ	Max	Unit	Condition
TX Current Consumption +14 dBm		47		mA	
TX Current Consumption +10 dBm		38		mA	

434 MHz band (High Performance Mode)

T_A = 25°C, VDD = 3.0 V, f_{xosc} = 40 MHz if nothing else stated

Parameter	Min	Typ	Max	Unit	Condition
TX Current Consumption +15 dBm		51		mA	
TX Current Consumption +14 dBm		47		mA	
TX Current Consumption +10 dBm		36		mA	

170 MHz band (High Performance Mode)

T_A = 25°C, VDD = 3.0 V, f_{xosc} = 40 MHz if nothing else stated

Parameter	Min	Typ	Max	Unit	Condition
TX Current Consumption +15 dBm		56		mA	
TX Current Consumption +14 dBm		52		mA	
TX Current Consumption +10 dBm		40		mA	

Low Power Mode

T_A = 25°C, VDD = 3.0 V, f_c = 869.5 MHz, f_{xosc} = 32 MHz if nothing else stated

PRODUCTION DATA information is current as of publication date. Products conform to specifications per the terms of Texas Instruments standard warranty. Production processing does not necessarily include testing of all parameters.

Parameter	Min	Typ	Max	Unit	Condition
TX Current Consumption +10 dBm		32		mA	

1.7 Current Consumption, Receive Modes

High Performance Mode

T_A = 25°C, VDD = 3.0 V, f_c = 869.5 MHz, f_{xosc} = 32 MHz if nothing else stated

Parameter	Min	Typ	Max	Unit	Condition
RX Wait for Sync 1.2 kbps, 4 Byte Preamble 38.4kbps, 4 Byte Preamble		 2 13.4		 mA mA	Using RX Sniff Mode, where the receiver wakes up at regular intervals to look for an incoming packet
RX Peak Current, f_{xosc} = 40 MHz 433, 868/915/920 MHz bands 170 MHz band		 26 27		 mA mA	Peak current consumption during packet reception at the sensitivity level
Average Current Consumption Check for Data Packet Every 1 Second Using Wake on Radio		15		uA	50 kbps, 5 byte preamble, 32 kHz RC oscillator used as sleep timer

Low Power Mode

T_A = 25°C, VDD = 3.0 V, f_c = 869.5 MHz, f_{xosc} = 32 MHz if nothing else stated

Parameter	Min	Typ	Max	Unit	Condition
RX Peak Current Low power RX mode 1.2 kbps		 17		 mA	Peak current consumption during packet reception at the sensitivity level

PRODUCTION DATA information is current as of publication date. Products conform to specifications per the terms of Texas Instruments standard warranty. Production processing does not necessarily include testing of all parameters.

1.8 Receive Parameters[1]

General Receive Parameters (High Performance Mode)

T_A = 25°C, VDD = 3.0 V, f_c = 869.5 MHz if nothing else stated

Parameter	Min	Typ	Max	Unit	Condition
Saturation		+10		dBm	
Digital Channel Filter Programmable Bandwidth f_{xosc} = 32 MHz f_{xosc} = 40 MHz	 2.8 3.5		 200 250	 kHz kHz	
IIP3, Normal Mode		-14		dBm	At maximum gain
IIP3, High Linearity Mode		-8		dBm	Using 6 dB gain reduction in front end
Datarate Offset Tolerance		±12 ±0.2		% %	With carrier sense detection enabled and assuming 4 byte preamble With carrier sense detection disabled
Spurious Emissions 1 - 13 GHz (VCO leakage at 3.5 GHz) 30 MHz to 1 GHz		 -56 < -57		 dBm dBm	Radiated emissions measured according to ETSI EN 300 220, f_c = 869.5 MHz
Optimum Source Impedance 868 / 915 / 920 MHz bands 433 MHz band 169 MHz band		 60 + j60 / 30+j30 100 + j60 / 50+ j30 140 + j40 / 70 + j20		 Ω Ω Ω	(Differential / Single Ended RX Configurations)

[1] All RX measurements made at the antenna connector, to a bit error rate limit of 1%

PRODUCTION DATA information is current as of publication date. Products conform to specifications per the terms of Texas Instruments standard warranty. Production processing does not necessarily include testing of all parameters.

RX performance in 950 MHz band (High Performance Mode)

T_A = 25°C, VDD = 3.0 V, f_{xosc} = 32 MHz if nothing else stated

Parameter	Min	Typ	Max	Unit	Condition
Sensitivity Note: Sensitivity can be improved if the TX and RX matching networks are separated.		-120		dBm	1.2 kbps, DEV=4 kHz CHF=10 kHz[2]
		-107		dBm	50 kbps 2GFSK, DEV=25 kHz, CHF=100 kHz
		-100		dBm	200 kbps, DEV=83 kHz (outer symbols), CHF=200 kHz, 4GFSK[3]
Blocking and Selectivity 1.2 kbps 2FSK, 12.5 kHz channel separation, 4 kHz deviation, 10 kHz channel filter		51		dB	± 12.5 kHz (adjacent channel)
		52		dB	± 25 kHz (alternate channel)
		73		dB	± 1 MHz
		76		dB	± 2 MHz
		81		dB	± 10 MHz
Blocking and Selectivity 50 kbps 2GFSK, 200 kHz channel separation, 25 kHz deviation, 100 kHz channel filter (Same modulation format as 802.15.4g Mandatory Mode)		43		dB	± 200 kHz (adjacent channel)
		51		dB	± 400 kHz (alternate channel)
		62		dB	± 1 MHz
		65		dB	± 2 MHz
		71		dB	± 10 MHz
Blocking and Selectivity 200 kbps 4GFSK, 83 kHz deviation (outer symbols), 200 kHz channel filter, zero IF		37		dB	± 200 kHz (adjacent channel)
		44		dB	± 400 kHz (alternate channel)
		55		dB	± 1 MHz
		58		dB	± 2 MHz
		64		dB	± 10 MHz

[2] DEV is short for deviation, CHF is short for Channel Filter Bandwidth

[3] BT=0.5 is used in all GFSK measurements

PRODUCTION DATA information is current as of publication date. Products conform to specifications per the terms of Texas Instruments standard warranty. Production processing does not necessarily include testing of all parameters.

RX performance in 868/915/920 MHz bands (High Performance Mode)

T_A = 25°C, VDD = 3.0 V, f_{xosc} = 32 MHz if nothing else stated

Parameter	Min	Typ	Max	Unit	Condition
Sensitivity		-129		dBm	300 bps, DEV=1 kHz CHF=3.8 kHz f_{xosc} = 40 MHz
		-123		dBm	1.2 kbps, DEV=4 kHz CHF=10 kHz
		-114		dBm	4.8 kbps OOK
		-110		dBm	38.4 kbps, DEV=20 kHz CHF=100 kHz
		-110		dBm	50 kbps 2GFSK, DEV=25 kHz, CHF=100 kHz
		-103		dBm	200 kbps, DEV=83 kHz (outer symbols), CHF=200 kHz, 4GFSK
Blocking and Selectivity 0.3 kbps 2FSK, 6.25 kHz channel separation, 1 kHz deviation, 3.8 kHz channel filter f_{xosc} = 40 MHz using TCXO		62		dB	± 6.25 kHz (adjacent channel)
		63		dB	+ 12.5 kHz (alternate channel)
		83		dB	± 1 MHz
		87		dB	± 2 MHz
		91		dB	± 10 MHz
Blocking and Selectivity 1.2 kbps 2FSK, 12.5 kHz channel separation, 4 kHz deviation, 10 kHz channel filter f_{xosc} = 40 MHz using TCXO		58		dB	± 12.5 kHz (adjacent channel)
		58		dB	± 25 kHz (alternate channel)
		78		dB	± 1 MHz
		82		dB	± 2 MHz
		86		dB	± 10 MHz
Blocking and Selectivity 1.2 kbps 2FSK, 25 kHz channel separation, 4 kHz deviation, 16 kHz channel filter f_{xosc} = 40 MHz using TCXO Using external SAW filter for compliance with ETSI category 1		58		dB	± 25 kHz (adjacent channel)
		77		dB	± 1 MHz
		106		dB	± 2 MHz
		101		dB	± 10 MHz
Blocking and Selectivity 38.4 kbps 2GFSK, 100 kHz channel separation, 20 kHz deviation, 100 kHz channel filter		42		dB	+ 100 kHz (adjacent channel)
		43		dB	± 200 kHz (alternate channel)
		62		dB	± 1 MHz
		66		dB	± 2 MHz
		74		dB	± 10 MHz
Blocking and Selectivity 50 kbps 2GFSK, 200 kHz channel separation, 25 kHz deviation, 100 kHz channel filter (Same modulation format as 802.15.4g Mandatory Mode)		43		dB	± 200 kHz (adjacent channel)
		50		dB	± 400 kHz (alternate channel)
		61		dB	± 1 MHz
		65		dB	± 2 MHz
		74		dB	± 10 MHz

PRODUCTION DATA information is current as of publication date. Products conform to specifications per the terms of Texas Instruments standard warranty. Production processing does not necessarily include testing of all parameters.

Parameter	Min	Typ	Max	Unit	Condition
Blocking and Selectivity 200 kbps 4GFSK, 83 kHz deviation (outer symbols), 200 kHz channel filter, zero IF		36		dB	± 200 kHz (adjacent channel)
		44		dB	± 400 kHz (alternate channel)
		55		dB	± 1 MHz
		59		dB	± 2 MHz
		67		dB	± 10 MHz
Image Rejection (Image compensation enabled) f_{xosc} = 40 MHz using TCXO		58		dB	1.2 kbps, DEV=4 kHz CHF=10 kHz, image at -125 kHz

RX performance in 434 MHz band (High Performance Mode)

T_A = 25°C, VDD = 3.0 V, f_{xosc} = 32 MHz if nothing else stated

Parameter	Min	Typ	Max	Unit	Condition
Sensitivity		-129		dBm	300 bps, DEV=1 kHz CHF=3.8 kHz f_{xosc} = 40 MHz
		-123		dBm	1.2 kbps, DEV=4 kHz CHF=10 kHz
		-109		dBm	50 kbps 2GFSK, DEV=25 kHz, CHF=100 kHz
		-116		dBm	1.2 kbps, DEV=20 kHz CHF=50 kHz
Blocking and Selectivity 0.3 kbps 2FSK, 6.25 kHz channel separation, 1 kHz deviation, 3.8 kHz channel filter f_{xosc} = 40 MHz using TCXO		65		dB	+ 6.25 kHz (adjacent channel)
		66		dB	+ 12.5 kHz (alternate channel)
		86		dB	± 1 MHz
		90		dB	± 2 MHz
		95		dB	± 10 MHz
Blocking and Selectivity 1.2 kbps 2FSK, 12.5 kHz channel separation, 4 kHz deviation, 10 kHz channel filter f_{xosc} = 40 MHz using TCXO		60		dB	± 12.5 kHz (adjacent channel)
		61		dB	± 25 kHz (alternate channel)
		80		dB	± 1 MHz
		85		dB	± 2 MHz
		91		dB	± 10 MHz
Blocking and Selectivity 38.4 kbps 2GFSK, 100 kHz channel separation, 20 kHz deviation, 100 kHz channel filter		47		dB	+ 100 kHz (adjacent channel)
		50		dB	± 200 kHz (alternate channel)
		67		dB	± 1 MHz
		71		dB	± 2 MHz
		78		dB	± 10 MHz

PRODUCTION DATA information is current as of publication date. Products conform to specifications per the terms of Texas Instruments standard warranty. Production processing does not necessarily include testing of all parameters.

RX performance in 170 MHz band (High Performance Mode)

T_A = 25°C, VDD = 3.0 V, f_{xosc} = 32 MHz if nothing else stated

Parameter	Min	Typ	Max	Unit	Condition
Sensitivity		-129		dBm	300 bps, DEV=1 kHz CHF=3.8 kHz f_{xosc} = 40 MHz
		-123		dBm	1.2 kbps, DEV=4 kHz CHF=10 kHz
Blocking and Selectivity 0.3 kbps 2FSK, 6.25 kHz channel separation, 1 kHz deviation, 3.8 kHz channel filter f_{xosc} = 40 MHz using TCXO		67		dB	± 6.25 kHz (adjacent channel)
		67		dB	+ 12.5 kHz (alternate channel)
		88		dB	± 1 MHz
		101		dB	- 2 MHz
		104		dB	± 10 MHz
Blocking and Selectivity 1.2 kbps 2FSK, 12.5 kHz channel separation, 4 kHz deviation, 10 kHz channel filter f_{xosc} = 40 MHz using TCXO		63		dB	± 12.5 kHz (adjacent channel)
		65		dB	± 25 kHz (alternate channel)
		82		dB	± 1 MHz
		86		dB	± 2 MHz
		93		dB	- 10 MHz
Spurious Response Rejection 1.2 kbps 2FSK, 12.5 kHz channel separation, 4 kHz deviation, 10 kHz channel filter		70		dB	
Image Rejection (Image compensation enabled)		66		dB	1.2 kbps, DEV=4 kHz CHF=10 kHz, image at -125 kHz

PRODUCTION DATA information is current as of publication date. Products conform to specifications per the terms of Texas Instruments standard warranty. Production processing does not necessarily include testing of all parameters.

RX performance in Low Power Mode

T_A = 25°C, VDD = 3.0 V, f_c = 869.5 MHz, f_{xosc} = 32 MHz if nothing else stated

Parameter	Min	Typ	Max	Unit	Condition
Sensitivity		-111		dBm	1.2 kbps, DEV=4 kHz CHF=10 kHz
		-99		dBm	38.4 kbps, DEV=50 kHz CHF=100 kHz
		-99		dBm	50 kbps 2GFSK, DEV=25 kHz, CHF=100 kHz
Blocking and Selectivity 1.2 kbps 2FSK, 12.5 kHz channel separation, 4 kHz deviation, 10 kHz channel filter		46		dB	± 12.5 kHz (adjacent channel)
		46		dB	± 25 kHz (alternate channel)
		73		dB	± 1 MHz
		78		dB	± 2 MHz
		79		dB	± 10 MHz
Blocking and Selectivity 1.2 kbps 2FSK, 50 kHz channel separation, 20 kHz deviation, 50 kHz channel filter		43		dB	± 50 kHz (adjacent channel)
		45		dB	+ 100 kHz (alternate channel)
		71		dB	± 1 MHz
		74		dB	± 2 MHz
		75		dB	± 10 MHz
Blocking and Selectivity 38.4 kbps 2GFSK, 100 kHz channel separation, 20 kHz deviation, 100 kHz channel filter		37		dB	+ 100 kHz (adjacent channel)
		43		dB	+ 200 kHz (alternate channel)
		58		dB	± 1 MHz
		62		dB	± 2 MHz
		64		dB	+ 10 MHz
Blocking and Selectivity 50 kbps 2GFSK, 200 kHz channel separation, 25 kHz deviation, 100 kHz channel filter (Same modulation format as 802.15.4g Mandatory Mode)		43		dB	+ 200 kHz (adjacent channel)
		52		dB	+ 400 kHz (alternate channel)
		60		dB	± 1 MHz
		64		dB	± 2 MHz
		65		dB	± 10 MHz
Saturation		+10		dBm	

PRODUCTION DATA information is current as of publication date. Products conform to specifications per the terms of Texas Instruments standard warranty. Production processing does not necessarily include testing of all parameters.

1.9 Transmit Parameters

T_A = 25°C, VDD = 3.0 V, f_c = 869.5 MHz, f_{xosc} = 32 MHz if nothing else stated

Parameter	Min	Typ	Max	Unit	Condition
Max Output Power		+12		dBm	At 950 MHz
		+14		dBm	At 915/920 MHz
		+15		dBm	At 915/920 MHz with VDD = 3.6 V
		+15		dBm	At 868 MHz
		+16		dBm	At 868 MHz with VDD = 3.6 V
		+15		dBm	At 433 MHz
		+16		dBm	At 433 MHz with VDD = 3.6 V
		+15		dBm	At 170 MHz
		+16		dBm	At 170 MHz with VDD = 3.6 V
Min Output Power		-11		dBm	Within fine step size range
		-40		dBm	Within coarse step size range
Output Power Step Size		0.4		dB	Within fine step size range
Adjacent Channel Power		-75		dBc	4-GFSK 9.6 kbps in 12.5 kHz channel, measured in 100 Hz bandwidth at 434 MHz (FCC Part 90 Mask D compliant)
		-58		dBc	4-GFSK 9.6 kbps in 12.5 kHz channel, measured in 8.75 kHz bandwidth (ETSI 300 220 compliant)
		-61		dBc	2-GFSK 2.4 kbps in 12.5 kHz channel, 1.2 kHz deviation
Spurious Emissions (Not including harmonics)		< -60		dBm	
Harmonics 2nd Harm, 170 MHz 3rd Harm, 170 MHz 2nd Harm, 433 MHz 3rd Harm, 433 MHz 2nd Harm, 450 MHz 3rd Harm, 450 MHz 2nd Harm, 868 MHz 3rd Harm, 868 MHz 2nd Harm, 915 MHz 3rd Harm, 915 MHz 4th Harm, 915 MHz 2nd Harm, 950 MHz 3rd Harm, 950 MHz		 -39 -58 -56 -51 -60 -45 -40 -42 56 52 60 -58 -42		 dBm dBm dBm dBm dBm dBm dBm dBm dBuV/m dBuV/m dBuV/m dBm dBm	Transmission at +14 dBm (or maximum allowed in applicable band where this is less than +14 dBm) using TI reference design Emissions measured according to ARIB T-96 in 950 MHz band, ETSI EN 300-220 in 170, 433 and 868 MHz bands and FCC part 15.247 in 450 and 915 MHz band Fourth harmonic in 915 MHz band will require extra filtering to meet FCC requirements if transmitting for long intervals (>50 ms periods)
Optimum Load Impedance 868 / 915 / 920 MHz bands 433 MHz band 169 MHz band		 35 + j35 55 + j25 80 + j0		 Ω Ω Ω	

PRODUCTION DATA information is current as of publication date. Products conform to specifications per the terms of Texas Instruments standard warranty. Production processing does not necessarily include testing of all parameters.

1.10 PLL Parameters

High Performance Mode

T_A = 25°C, VDD = 3.0 V, f_c = 869.5 MHz, f_{xosc} = 40 MHz using TCXO if nothing else stated

Parameter	Min	Typ	Max	Unit	Condition
Phase Noise in 950 MHz Band f_{xosc} = 32 MHz		-100		dBc/Hz	± 10 kHz offset
		-103		dBc/Hz	± 100 kHz offset
		-123		dBc/Hz	± 1 MHz offset
Phase Noise in 868/915/920 MHz Bands		-101		dBc/Hz	± 10 kHz offset
		-102		dBc/Hz	± 100 kHz offset
		-124		dBc/Hz	± 1 MHz offset
Phase Noise in 433 MHz Band		-107		dBc/Hz	± 10 kHz offset
		-110		dBc/Hz	± 100 kHz offset
		-130		dBc/Hz	± 1 MHz offset
Phase Noise in 170 MHz Band		-115		dBc/Hz	± 10 kHz offset
		-115		dBc/Hz	± 100 kHz offset
		-135		dBc/Hz	± 1 MHz offset

Low Power Mode

T_A = 25°C, VDD = 3.0 V, f_c = 869.5 MHz, f_{xosc} = 32 MHz if nothing else stated

Parameter	Min	Typ	Max	Unit	Condition
Phase Noise in 950 MHz Band		-90		dBc/Hz	± 10 kHz offset
		-92		dBc/Hz	± 100 kHz offset
		-124		dBc/Hz	± 1 MHz offset
Phase Noise in 868/915/920 MHz Bands		-95		dBc/Hz	± 10 kHz offset
		-95		dBc/Hz	± 100 kHz offset
		-124		dBc/Hz	± 1 MHz offset
Phase Noise in 433 MHz Band		-98		dBc/Hz	± 10 kHz offset
		-102		dBc/Hz	± 100 kHz offset
		-129		dBc/Hz	± 1 MHz offset
Phase Noise in 170 MHz Band		-106		dBc/Hz	± 10 kHz offset
		-110		dBc/Hz	± 100 kHz offset
		-136		dBc/Hz	± 1 MHz offset

PRODUCTION DATA information is current as of publication date. Products conform to specifications per the terms of Texas Instruments standard warranty. Production processing does not necessarily include testing of all parameters.

1.11 Wake-up and Timing

T_A = 25°C, VDD = 3.0 V, f_c = 869.5 MHz, f_{xosc} = 32 MHz if nothing else stated

Parameter	Min	Typ	Max	Unit	Condition
Powerdown to IDLE		0.4		ms	Depends on crystal
IDLE to RX/TX		166		µs	Calibration disabled
		461		µs	Calibration enabled
RX/TX Turnaround		50		µs	
RX/TX to IDLE time		296		µs	Calibrate when leaving RX/TX enabled
		0		µs	Calibrate when leaving RX/TX disabled
Frequency Synthesizer Calibration		0.4		ms	When using SCAL strobe
Minimum Required Number of Preamble Bytes		0.5		bytes	Required for RF front end gain settling only. Digital demodulation does not require preamble for settling
Time From Start RX Until Valid RSSI		4.6		ms	12.5 kHz channels
Including gain settling (function of channel bandwidth. Programmable for trade-off between speed and accuracy)		0.3		ms	200 kHz channels

1.12 High Speed Crystal Oscillator

T_A = 25°C, VDD = 3.0 V if nothing else stated

Parameter	Min	Typ	Max	Unit	Condition
Crystal Frequency	32		44	MHz	Note: It is recommended that the crystal frequency is chosen so that the RF channel(s) are >1 MHz away from multiples of XOSC in TX and XOSC/2 in RX
Load Capacitance (C_L)		10		pF	
ESR		<50		Ω	
Start-up Time		0.4		ms	Depends on crystal

1.13 High Speed Clock Input (TCXO)

T_A = 25°C, VDD = 3.0 V if nothing else stated

Parameter	Min	Typ	Max	Unit	Condition
Clock Frequency	32		44	MHz	
Clock input amplitude (peak-to-peak)		>0.8		V	Should not exceed supply voltage

PRODUCTION DATA information is current as of publication date. Products conform to specifications per the terms of Texas Instruments standard warranty. Production processing does not necessarily include testing of all parameters.

1.14 32 kHz Clock Input

T_A = 25°C, VDD = 3.0 V if nothing else stated

Parameter	Min	Typ	Max	Unit	Condition
Clock Frequency		32		kHz	
32 kHz Clock Input Pin Input High Voltage	0.8×VDD			V	
32 kHz Clock Input Pin Input Low Voltage			0.2×VDD	V	

1.15 Low Speed RC Oscillator

T_A = 25°C, VDD = 3.0 V if nothing else stated.

Parameter	Min	Typ	Max	Unit	Condition
Frequency		32/40		kHz	After Calibration (calibrated against the high speed XOSC)
Frequency Accuracy After Calibration		±0.1		%	Relative to frequency reference (i.e. 32 MHz crystal or TCXO)
Initial Calibration Time		1.6		ms	

1.16 I/O and Reset

T_A = 25°C, VDD = 3.0 V if nothing else stated

Parameter	Min	Typ	Max	Unit	Condition
Logic Input High Voltage	0.8×VDD			V	
Logic Input Low Voltage			0.2×VDD	V	
Logic Output High Voltage	0.8×VDD			V	At 4 mA output load or less
Logic Output Low Voltage			0.2×VDD	V	
Power-on Reset Threshold		1.3		V	Voltage on DVDD pin

1.17 Temperature Sensor

T_A = 25°C, VDD = 3.0 V if nothing else stated

Parameter	Min	Typ	Max	Unit	Condition
Temperature Sensor Range	-40		85	°C	
Temperature Coefficient		2.66		mV / °C	Change in sensor output voltage vs change in temperature
Typical Output Voltage		794		mV	Typical sensor output voltage at T_A = 25°C, VDD = 3.0 V
VDD Coefficient		1.17		mV / V	Change in sensor output voltage vs change in VDD

The **CC1125** can be configured to provide a voltage proportional to temperature on GPIO1. Using the information above, the temperature can be estimated by measuring this voltage. Please refer to the **CC1125** user guide for more information.

PRODUCTION DATA information is current as of publication date. Products conform to specifications per the terms of Texas Instruments standard warranty. Production processing does not necessarily include testing of all parameters.

2 Typical Performance Curves

T_A = 25°C, VDD = 3.0 V, f_c = 869.5 MHz if nothing else stated

All measurements performed on CC1120EM_868_915 rev.1.0.1, CC1120EM_955 rev.1.2.1, CC1120EM_420_470 rev.1.0.1 or CC1120EM_169 rev.1.2 (f_{xosc} = 32 MHz), and CC1125EM_868_915 rev.1.1.0, CC1125EM_420_470 rev.1.1.0, CC1125EM_169 rev.1.1.0, CC1125EM-Cat1-868 (f_{xosc} = 40 MHz)

Note that the "output power vs load impedance" plot was measured at the 50 Ω antenna connector

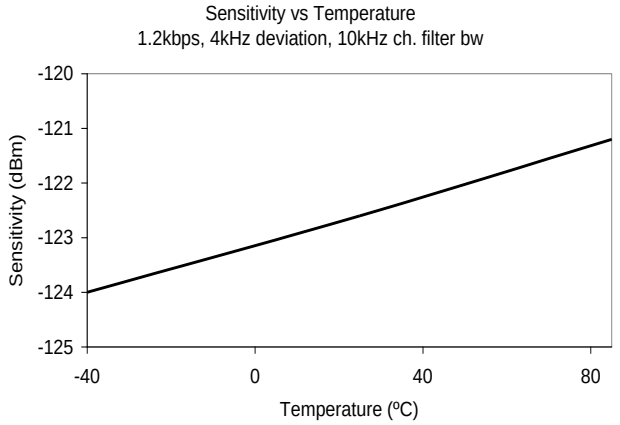

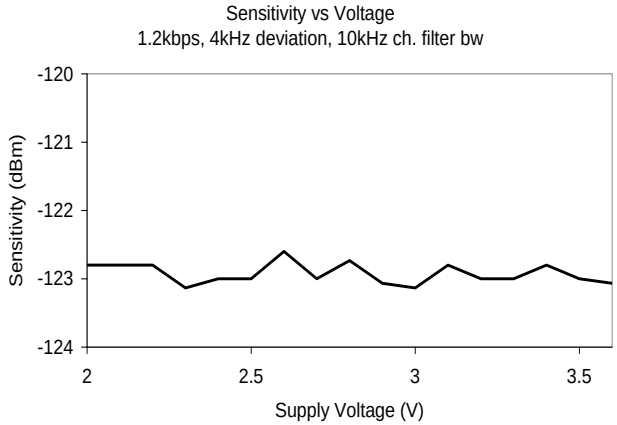

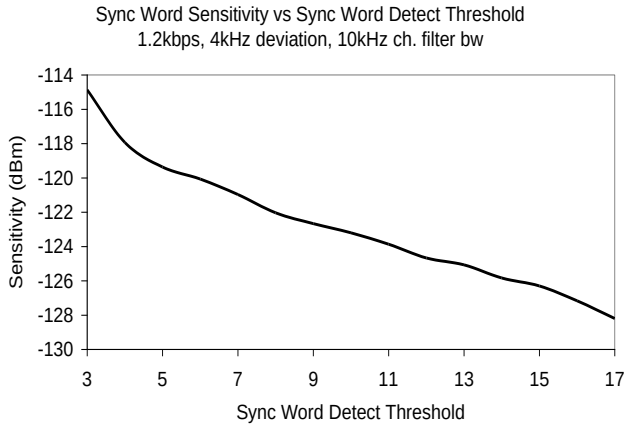

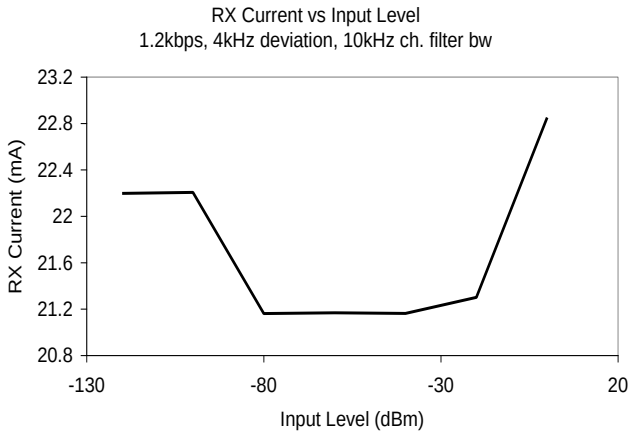

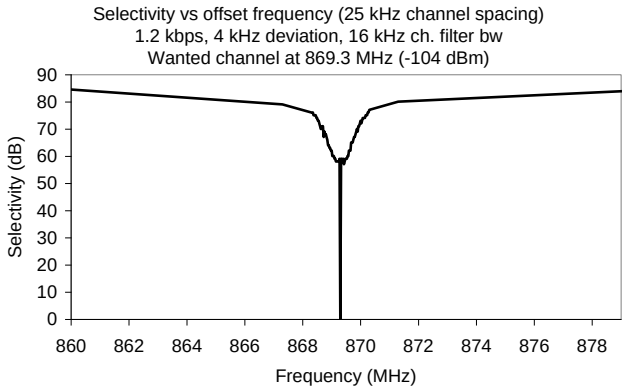

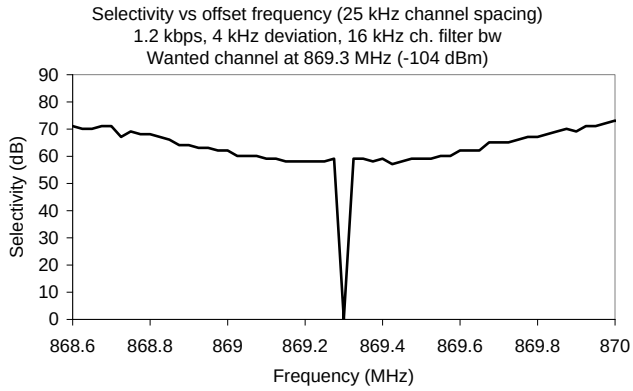

PRODUCTION DATA information is current as of publication date. Products conform to specifications per the terms of Texas Instruments standard warranty. Production processing does not necessarily include testing of all parameters.

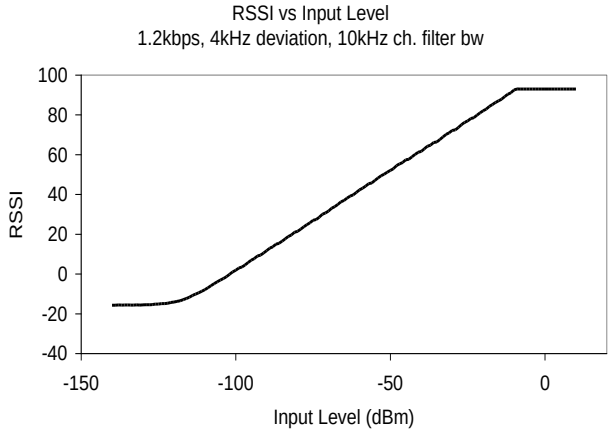

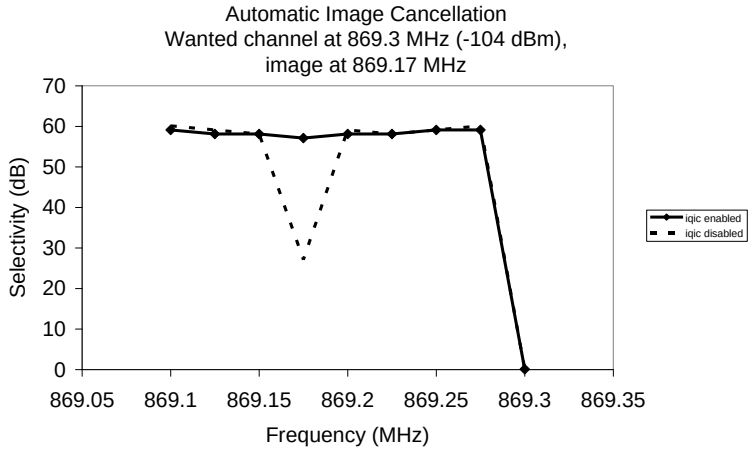

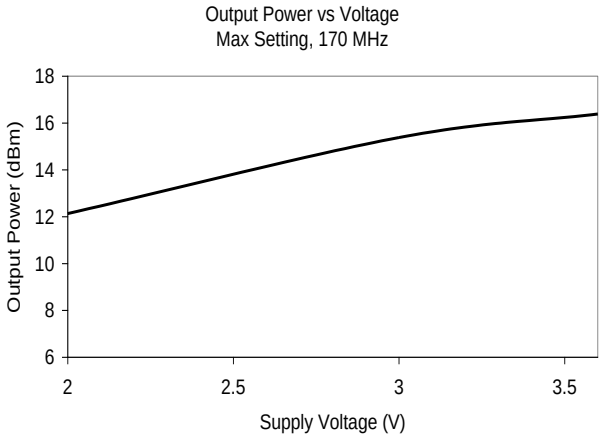

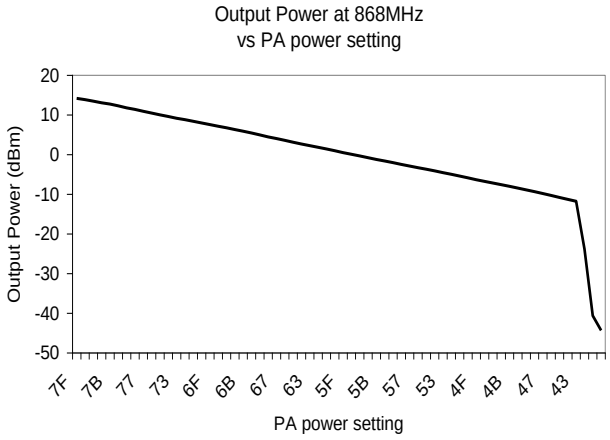

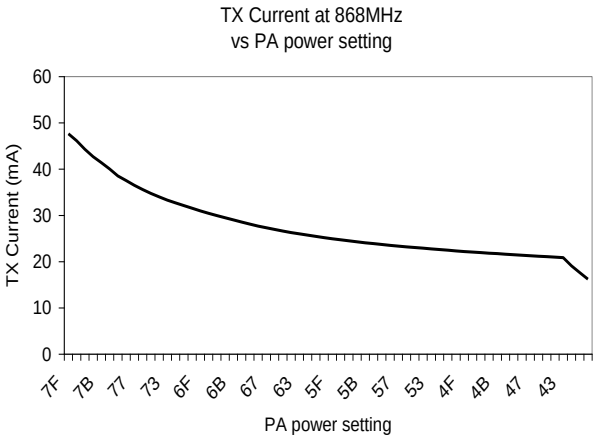

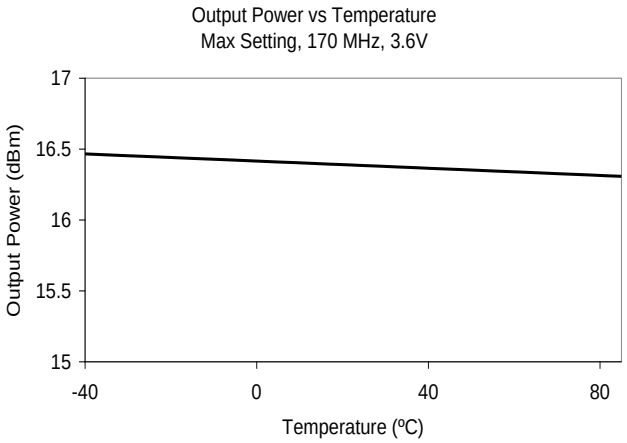

PRODUCTION DATA information is current as of publication date. Products conform to specifications per the terms of Texas Instruments standard warranty. Production processing does not necessarily include testing of all parameters.

Eye Diagram

200 kbps, DEV=83 kHz (outer symbols), 4GFSK

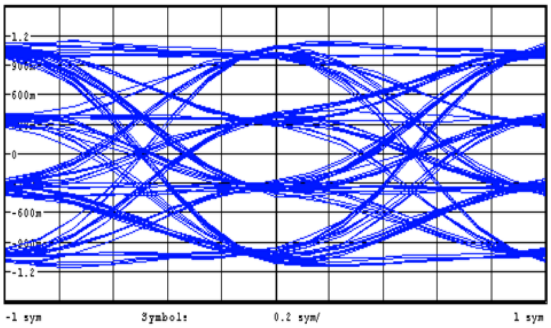

Eye Diagram

1.2 kbps 2-FSK, DEV=4 kHz

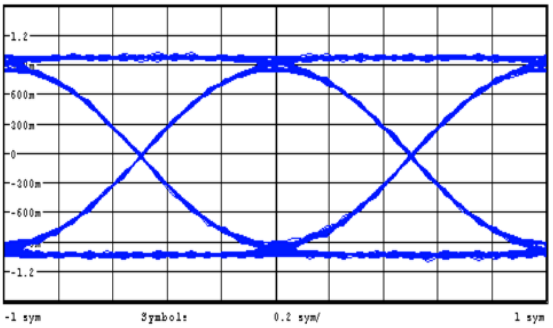

FCC Part 90 Mask D

9.6 kbps in 12.5 kHz Channel

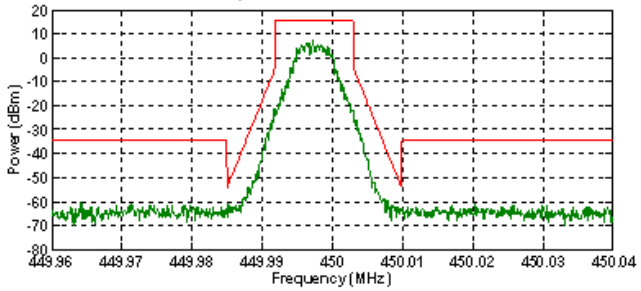

Output Power vs Load impedance (+14dBm setting)

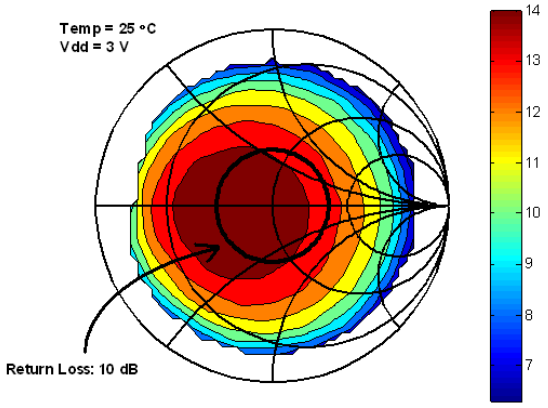

GPIO Output High Voltage vs Current Being Sourced

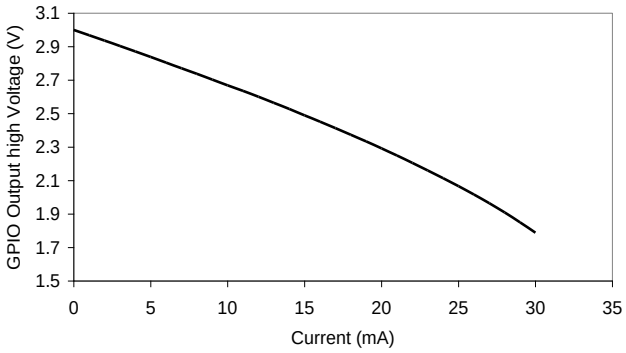

GPIO Output Low Voltage vs Current Being Sinked

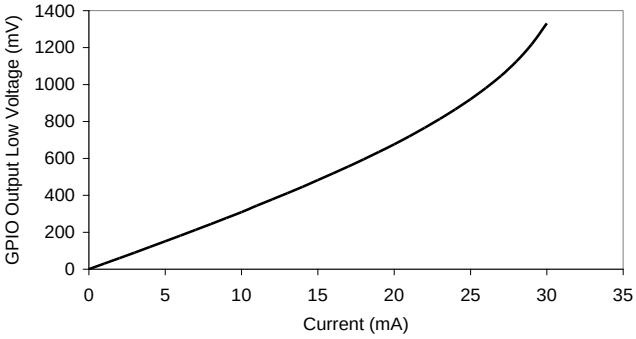

PRODUCTION DATA information is current as of publication date. Products conform to specifications per the terms of Texas Instruments standard warranty. Production processing does not necessarily include testing of all parameters.

3 Pin Configuration

The **CC1125** pin-out is shown in the table below.

Pin #	Pin name	Type / direction	Description
1	VDD_GUARD	Power	2.0 - 3.6 V VDD
2	RESET_N	Digital Input	Asynchronous, active-low digital reset
3	GPIO3	Digital Input/Output	General purpose IO
4	GPIO2	Digital Input/Output	General purpose IO
5	DVDD	Power	2.0 - 3.6 VDD to internal digital regulator
6	DCPL	Power	Digital regulator output to external decoupling capacitor
7	SI	Digital Input	Serial data in
8	SCLK	Digital Input	Serial data clock
9	SO(GPIO1)	Digital Input/Output	Serial data out (General purpose IO)
10	GPIO0	Digital Input/Output	General purpose IO
11	CSn	Digital Input	Active-low chip-select
12	DVDD	Power	2.0 - 3.6 V VDD
13	AVDD_IF	Power	2.0 - 3.6 V VDD
14	RBIAS	Analog	External high precision R
15	AVDD_RF	Power	2.0 - 3.6 V VDD
16	N.C.		Not Connected
17	PA	Analog	Single-ended TX output
18	TRX_SW	Analog	TX/RX switch
19	LNA_P	Analog	Differential RX input
20	LNA_N	Analog	Differential RX input
21	DCPL_VCO	Power	Pin for external decoupling of VCO supply regulator
22	AVDD_SYNTH1	Power	2.0 - 3.6 V VDD
23	LPF0	Analog	External loopfilter components
24	LPF1	Analog	External loopfilter components
25	AVDD_PFD_CHP	Power	2.0 - 3.6 V VDD
26	DCPL_PFD_CHP	Power	Pin for external decoupling of PFD and CHP regulator
27	AVDD_SYNTH2	Power	2.0 - 3.6 V VDD
28	AVDD_XOSC	Power	2.0 - 3.6 V VDD
29	DCPL_XOSC	Power	Pin for external decoupling of XOSC supply regulator
30	XOSC_Q1	Analog	Crystal oscillator pin 1 (must be grounded if a TCXO or other external clock connected to EXT_XOSC is used)
31	XOSC_Q2	Analog	Crystal oscillator pin 2 (must be left floating if a TCXO or other external clock connected to EXT_XOSC is used)
32	EXT_XOSC	Digital Input	Pin for external XOSC input (must be grounded if a regular XOSC connected to XOSC_Q1 and XOSC_Q2 is used)
-	GND	Ground Pad	The ground pad must be connected to a solid ground plane

PRODUCTION DATA information is current as of publication date. Products conform to specifications per the terms of Texas Instruments standard warranty. Production processing does not necessarily include testing of all parameters.

4 Block Diagram

A system block diagram of **CC1125** is shown Figure 4.1.

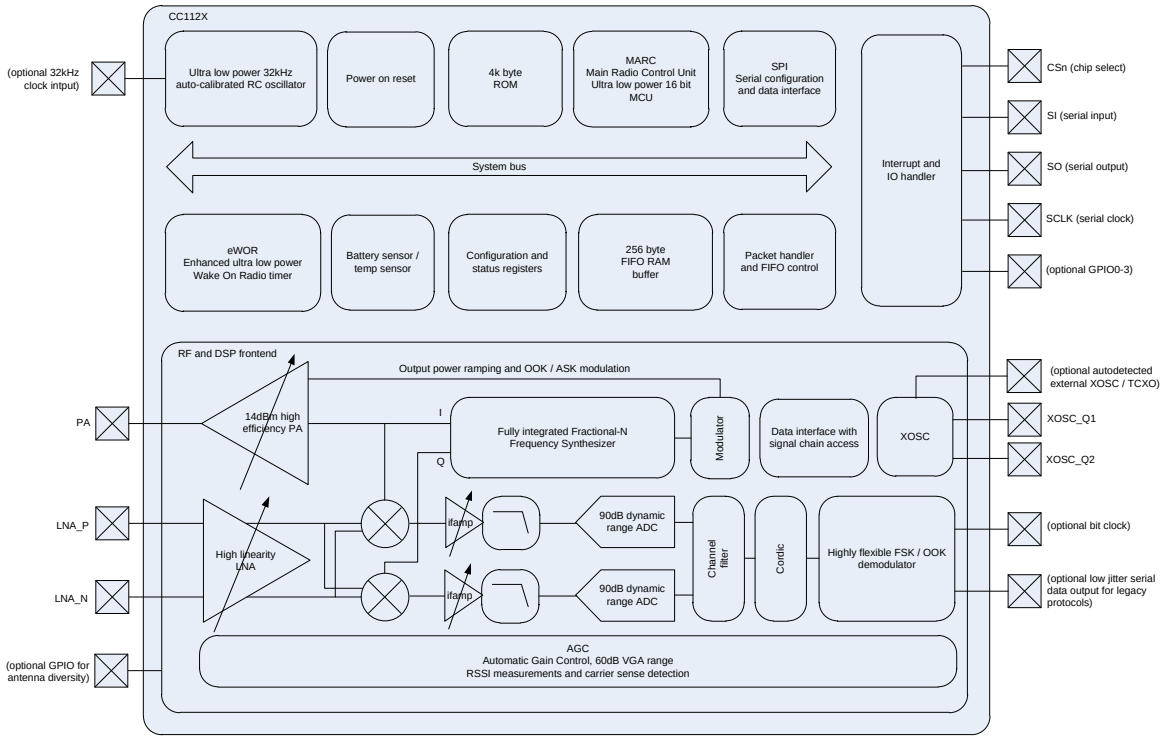

Figure 4.1 : System Block Diagram

4.1 Frequency Synthesizer

At the heart of **CC1125** there is a fully integrated, fractional-N, ultra high performance frequency synthesizer. The frequency synthesizer is designed for excellent phase noise performance, providing very high selectivity and blocking performance. The system is designed to comply with the most stringent regulatory spectral masks at maximum transmit power.

Either a crystal can be connected to XOSC_Q1 and XOSC_Q2, or a TCXO can be connected to the EXT_XOSC input. The oscillator generates the reference frequency for the synthesizer, as well as clocks for the ADC and the digital part. To reduce system cost, **CC1125** has high accuracy frequency estimation and compensation registers to measure and compensate for crystal inaccuracies, enabling the use of lower cost crystals. If a TCXO is used, the **CC1125** will automatically turn the TCXO on and off when needed to support low power modes and Wake-On-Radio operation.

4.2 Receiver

CC1125 features a highly flexible receiver. The received RF signal is amplified by the low-noise amplifier (LNA) and down-converted in quadrature (I and Q) to the intermediate frequency (IF). At IF, the I/Q signals are digitized by the high dynamic range ADCs.

An advanced Automatic Gain Control (AGC) unit adjusts the front end gain, and enables the **CC1125** to receive both strong and weak signals, even in the presence of strong interferers. High attenuation channel and data filtering enable reception with strong neighbor channel interferers. The I/Q signal is converted to a phase / magnitude signal to support both FSK and OOK modulation schemes.

A sophisticated pattern recognition algorithm locks onto the synchronization word without need for preamble settling bytes. Receiver settling time is therefore reduced to the settling time of the

PRODUCTION DATA information is current as of publication date. Products conform to specifications per the terms of Texas Instruments standard warranty. Production processing does not necessarily include testing of all parameters.

AGC, typically 4 bits. The advanced pattern recognition also greatly reduces the problem of false sync triggering on noise, further reducing power consumption and improving sensitivity and reliability. The pattern recognition logic can also be used as a high performance preamble detector to reliably detect a valid preamble in the channel.

A novel I/Q compensation algorithm removes any problem of I/Q mismatch and hence avoids time consuming and costly I/Q / image calibration steps in production or in the field.

4.3 Transmitter

The **CC1125** transmitter is based on direct synthesis of the RF frequency (in-loop modulation). To achieve effective spectrum usage, **CC1125** has extensive data filtering and shaping in TX to support high throughput data communication in narrowband channels. The modulator also controls power ramping to remove issues such as spectral splattering when driving external high power RF amplifiers.

4.4 Radio Control and User Interface

The **CC1125** digital control system is built around MARC (Main Radio Control) implemented using an internal high performance 16 bit ultra low power processor. MARC handles power modes, radio sequencing and protocol timing.

A 4-wire SPI serial interface is used for configuration and data buffer access. The digital baseband includes support for channel configuration, packet handling, and data buffering. The host MCU can stay in power down until a valid RF packet has been received, and then burst read the data, greatly reducing the power consumption and computing power required from the host MCU.

The **CC1125** radio control and user interface is based on the widely used **CC1101** transceiver to enable easy SW transition between the two platforms. The command strobes and the main radio states are the same for the two platforms.

For legacy formats **CC1125** also has support for two serial modes. In synchronous serial mode **CC1125** performs bit synchronization and provides the MCU with a bit clock with associated data. In transparent mode **CC1125** outputs the digital baseband signal using a digital interpolation filter to eliminate jitter introduced by digital filtering and demodulation.

4.5 Enhanced Wake-On-Radio (eWOR)

eWOR, using a flexible integrated sleep timer, enables automatic receiver polling with no intervention from the MCU. The **CC1125** will enter RX, listen and return to sleep if a valid RF packet is not received. The sleep interval and duty cycle can be configured to make a trade-off between network latency and power consumption. Incoming messages are time-stamped to simplify timer re-synchronization.

The eWOR timer runs off an ultra low power 32 kHz RC oscillator. To improve timing accuracy, the RC oscillator can be automatically calibrated to the RF crystal in configurable intervals.

4.6 Sniff Mode

The **CC1125** supports very quick start up times, and requires very few preamble bits. Sniff Mode uses this to dramatically reduce the current consumption while the receiver is waiting for data.

Since the **CC1125** is able to wake up and settle much faster than the length of most preambles, it is not required to be in RX continuously while waiting for a packet to arrive. Instead, the enhanced wake-on-radio feature can be used to put the device into sleep periodically. By setting an appropriate sleep time, the **CC1125** will be able to wake up and receive the packet when it arrives with no performance loss. This removes the need for accurate timing synchronization between transmitter and receiver, and allows the user to trade off current consumption between the transmitter and receiver.

PRODUCTION DATA information is current as of publication date. Products conform to specifications per the terms of Texas Instruments standard warranty. Production processing does not necessarily include testing of all parameters.

4.7 Antenna Diversity

Antenna diversity can increase performance in a multi-path environment. An external antenna switch is required. The switch can be automatically controlled by **CC1125** using one of the GPIO pins (also support for differential output control signal typically used in RF switches).

If antenna diversity is enabled, the GPIO will alternate between states until a valid RF input signal is detected. An optional acknowledge packet can be transmitted without changing GPIO state.

An incoming RF signal can be validated by received signal strength, by using the automatic preamble detector, or a combination of the two. Using the preamble detector will make a more robust system and avoid the need to set a defined signal strength threshold, as this threshold will set the sensitivity limit of the system.

PRODUCTION DATA information is current as of publication date. Products conform to specifications per the terms of Texas Instruments standard warranty. Production processing does not necessarily include testing of all parameters.

5 Typical Application Circuit

Very few external components are required for the operation of **CC1125**. A typical application circuit is shown below. Note that it does not show how the board layout should be done, which will greatly influence the RF performance of **CC1125**.

This section is meant as an introduction only. Note that decoupling capacitors for power pins are not shown in the figure below.

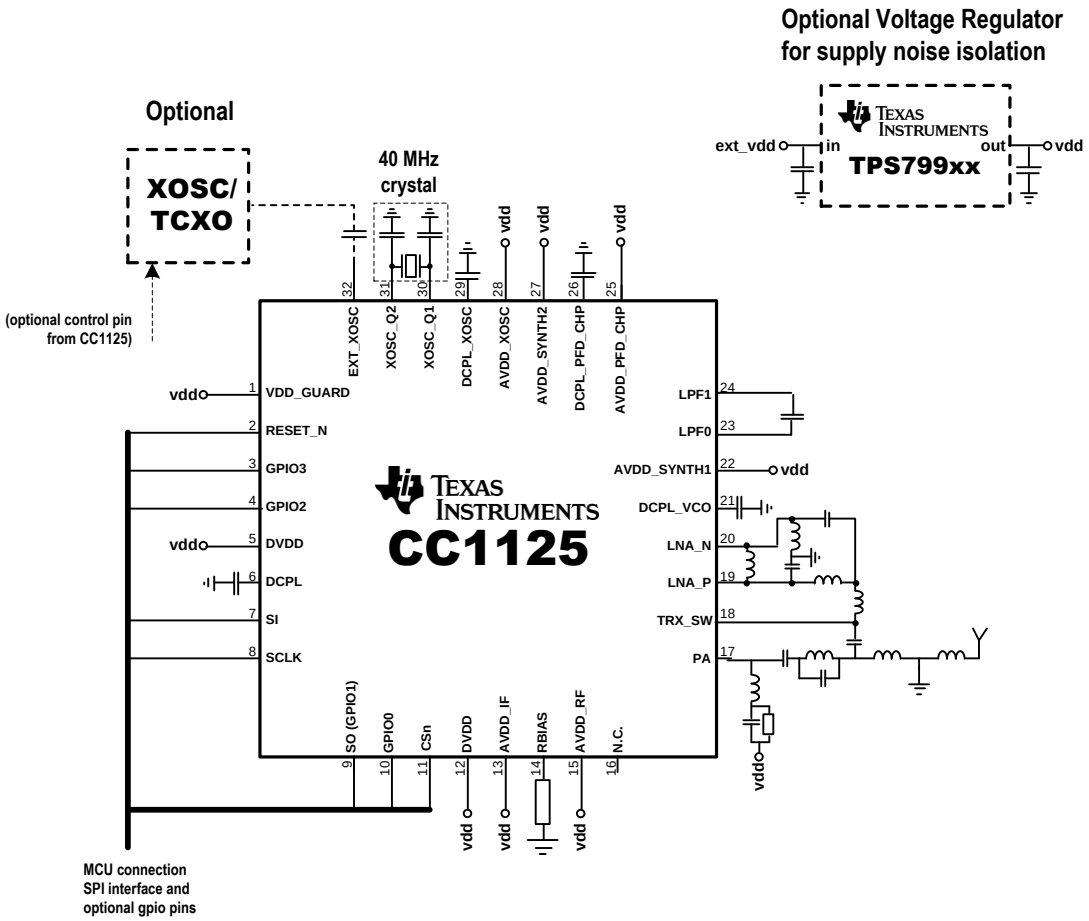

Figure 5.1 : Typical Application Circuit

PRODUCTION DATA information is current as of publication date. Products conform to specifications per the terms of Texas Instruments standard warranty. Production processing does not necessarily include testing of all parameters.

6 History

Revision	Date	Description / Changes
SWRS120B	March 2013	Added ARIB T-108 to list of regulations Added ETSI EN 301 166 to list of regulations Added optimum source / load impedance Added missing unit "dBm" in output power section Added temperature sensor data Clarified how the typical performance curves have been measured Corrected wrong deviation for 38.4 kbps sensitivity (was 50 kHz, corrected to 20 kHz) Pin CS_N renamed to CSn to comply with naming convention used in the user guide Updated typical frequency of low frequency RCOSC to show that it scales with the reference it is calibrated against (i.e. the high speed XOSC) Updated modulation format information in image rejection sections Stated which ETSI EN 300 220 receiver category that is suitable for low power mode Clarified under max ratings that I/O voltages should not exceed device supply voltage by more than 0.3 V Various minor spelling errors corrected
SWRS120	March 2012	Initial release

PRODUCTION DATA information is current as of publication date. Products conform to specifications per the terms of Texas Instruments standard warranty. Production processing does not necessarily include testing of all parameters.

PACKAGING INFORMATION

Orderable Device	Status (1)	Package Type	Package Drawing	Pins	Package Qty	Eco Plan (2)	Lead/Ball Finish	MSL Peak Temp (3)	Op Temp (°C)	Top-Side Markings (4)	Samples
CC1125RHBR	ACTIVE	QFN	RHB	32	3000	Green (RoHS & no Sb/Br)	CU NIPDAUAG	Level-3-260C-168 HR	-40 to 85	CC1125	Samples
CC1125RHBT	ACTIVE	QFN	RHB	32	250	Green (RoHS & no Sb/Br)	CU NIPDAUAG	Level-3-260C-168 HR	-40 to 85	CC1125	Samples
CC1125RHMR	NRND	QFN	RHM	32	3000	Green (RoHS & no Sb/Br)	CU NIPDAU	Level-3-260C-168 HR	-40 to 85	CC1125	
CC1125RHMT	NRND	QFN	RHM	32	250	Green (RoHS & no Sb/Br)	CU NIPDAU	Level-3-260C-168 HR	-40 to 85	CC1125	

(1) The marketing status values are defined as follows:
ACTIVE: Product device recommended for new designs.
LIFEBUY: TI has announced that the device will be discontinued, and a lifetime-buy period is in effect.
NRND: Not recommended for new designs. Device is in production to support existing customers, but TI does not recommend using this part in a new design.
PREVIEW: Device has been announced but is not in production. Samples may or may not be available.
OBSOLETE: TI has discontinued the production of the device.

(2) Eco Plan - The planned eco-friendly classification: Pb-Free (RoHS), Pb-Free (RoHS Exempt), or Green (RoHS & no Sb/Br) - please check http://www.ti.com/productcontent for the latest availability information and additional product content details.
TBD: The Pb-Free/Green conversion plan has not been defined.
Pb-Free (RoHS): TI's terms "Lead-Free" or "Pb-Free" mean semiconductor products that are compatible with the current RoHS requirements for all 6 substances, including the requirement that lead not exceed 0.1% by weight in homogeneous materials. Where designed to be soldered at high temperatures, TI Pb-Free products are suitable for use in specified lead-free processes.
Pb-Free (RoHS Exempt): This component has a RoHS exemption for either 1) lead-based flip-chip solder bumps used between the die and package, or 2) lead-based die adhesive used between the die and leadframe. The component is otherwise considered Pb-Free (RoHS compatible) as defined above.
Green (RoHS & no Sb/Br): TI defines "Green" to mean Pb-Free (RoHS compatible), and free of Bromine (Br) and Antimony (Sb) based flame retardants (Br or Sb do not exceed 0.1% by weight in homogeneous material)

(3) MSL, Peak Temp. -- The Moisture Sensitivity Level rating according to the JEDEC industry standard classifications, and peak solder temperature.

(4) Multiple Top-Side Markings will be inside parentheses. Only one Top-Side Marking contained in parentheses and separated by a "~" will appear on a device. If a line is indented then it is a continuation of the previous line and the two combined represent the entire Top-Side Marking for that device.

Important Information and Disclaimer: The information provided on this page represents TI's knowledge and belief as of the date that it is provided. TI bases its knowledge and belief on information provided by third parties, and makes no representation or warranty as to the accuracy of such information. Efforts are underway to better integrate information from third parties. TI has taken and continues to take reasonable steps to provide representative and accurate information but may not have conducted destructive testing or chemical analysis on incoming materials and chemicals. TI and TI suppliers consider certain information to be proprietary, and thus CAS numbers and other limited information may not be available for release.

In no event shall TI's liability arising out of such information exceed the total purchase price of the TI part(s) at issue in this document sold by TI to Customer on an annual basis.

TAPE AND REEL INFORMATION

REEL DIMENSIONS

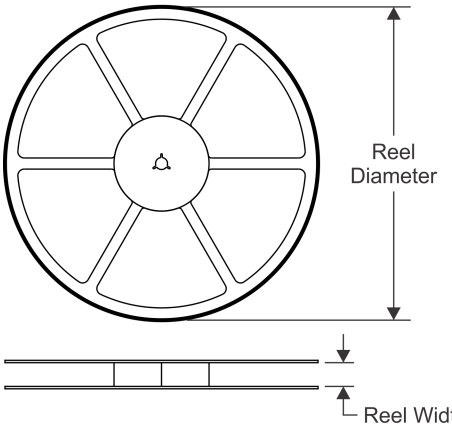

TAPE DIMENSIONS

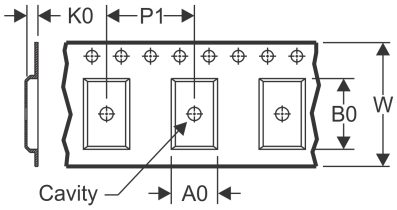

A0	Dimension designed to accommodate the component width
B0	Dimension designed to accommodate the component length
K0	Dimension designed to accommodate the component thickness
W	Overall width of the carrier tape
P1	Pitch between successive cavity centers

QUADRANT ASSIGNMENTS FOR PIN 1 ORIENTATION IN TAPE

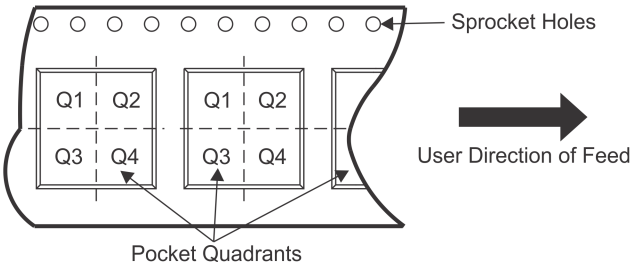

*All dimensions are nominal

Device	Package Type	Package Drawing	Pins	SPQ	Reel Diameter (mm)	Reel Width W1 (mm)	A0 (mm)	B0 (mm)	K0 (mm)	P1 (mm)	W (mm)	Pin1 Quadrant
CC1125RHBR	QFN	RHB	32	3000	330.0	12.4	5.3	5.3	1.5	8.0	12.0	Q2
CC1125RHBT	QFN	RHB	32	250	180.0	12.4	5.3	5.3	1.5	8.0	12.0	Q2

TAPE AND REEL BOX DIMENSIONS

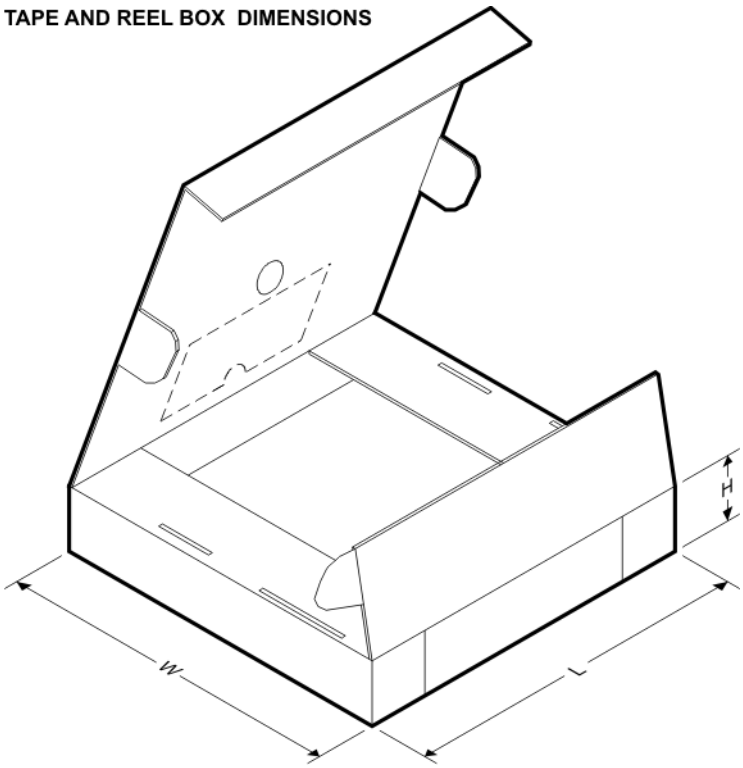

*All dimensions are nominal

Device	Package Type	Package Drawing	Pins	SPQ	Length (mm)	Width (mm)	Height (mm)
CC1125RHBR	QFN	RHB	32	3000	338.1	338.1	20.6
CC1125RHBT	QFN	RHB	32	250	210.0	185.0	35.0

RHB (S–PVQFN–N32) PLASTIC QUAD FLATPACK NO–LEAD

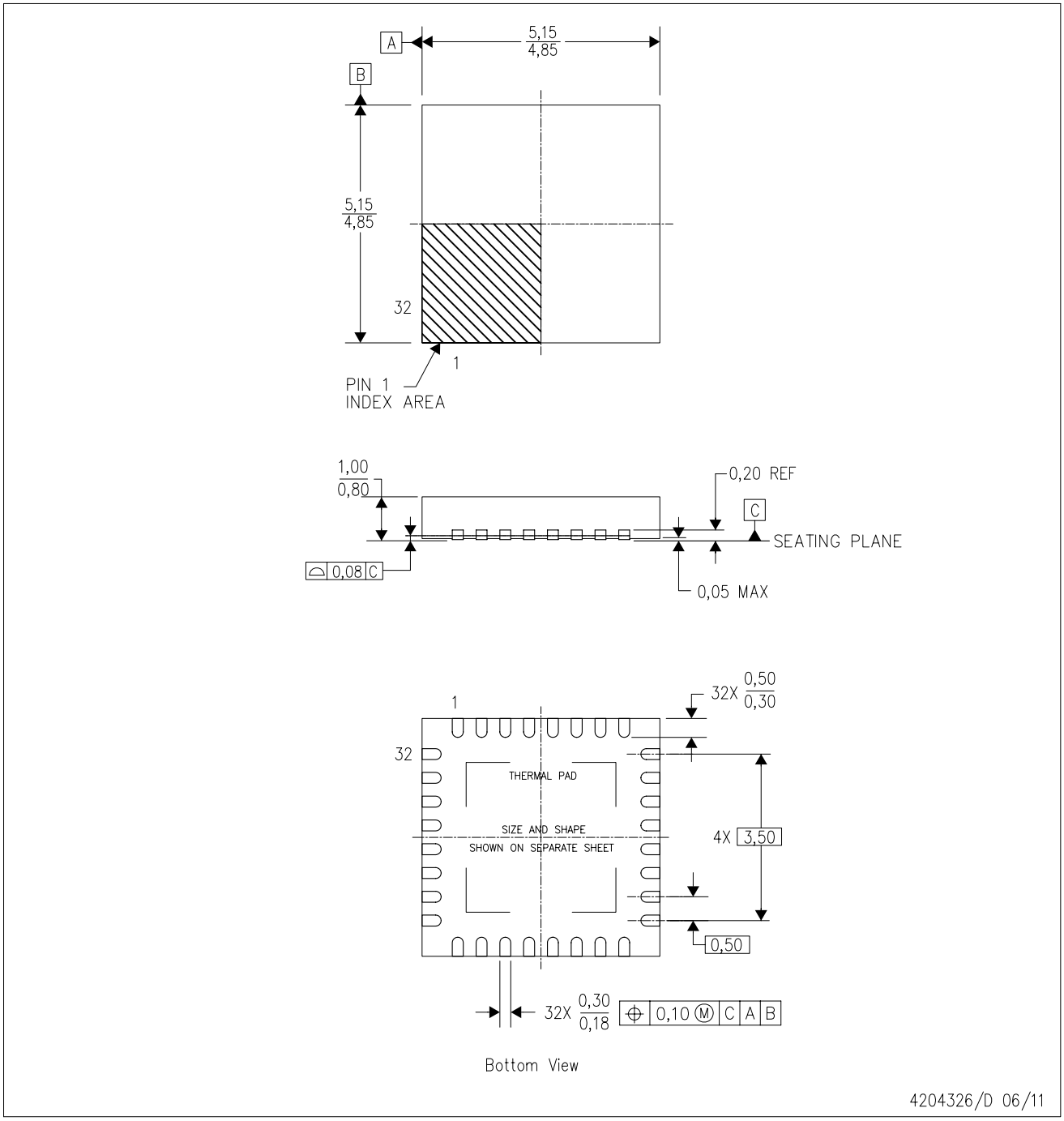

NOTES:
A. All linear dimensions are in millimeters. Dimensioning and tolerancing per ASME Y14.5M–1994.
B. This drawing is subject to change without notice.
C. QFN (Quad Flatpack No–Lead) Package configuration.
D. The package thermal pad must be soldered to the board for thermal and mechanical performance.
E. See the additional figure in the Product Data Sheet for details regarding the exposed thermal pad features and dimensions.
F. Falls within JEDEC MO–220.

RHB (S–PVQFN–N32) PLASTIC QUAD FLATPACK NO–LEAD

THERMAL INFORMATION

This package incorporates an exposed thermal pad that is designed to be attached directly to an external heatsink. The thermal pad must be soldered directly to the printed circuit board (PCB). After soldering, the PCB can be used as a heatsink. In addition, through the use of thermal vias, the thermal pad can be attached directly to the appropriate copper plane shown in the electrical schematic for the device, or alternatively, can be attached to a special heatsink structure designed into the PCB. This design optimizes the heat transfer from the integrated circuit (IC).

For information on the Quad Flatpack No–Lead (QFN) package and its advantages, refer to Application Report, QFN/SON PCB Attachment, Texas Instruments Literature No. SLUA271. This document is available at www.ti.com.

The exposed thermal pad dimensions for this package are shown in the following illustration.

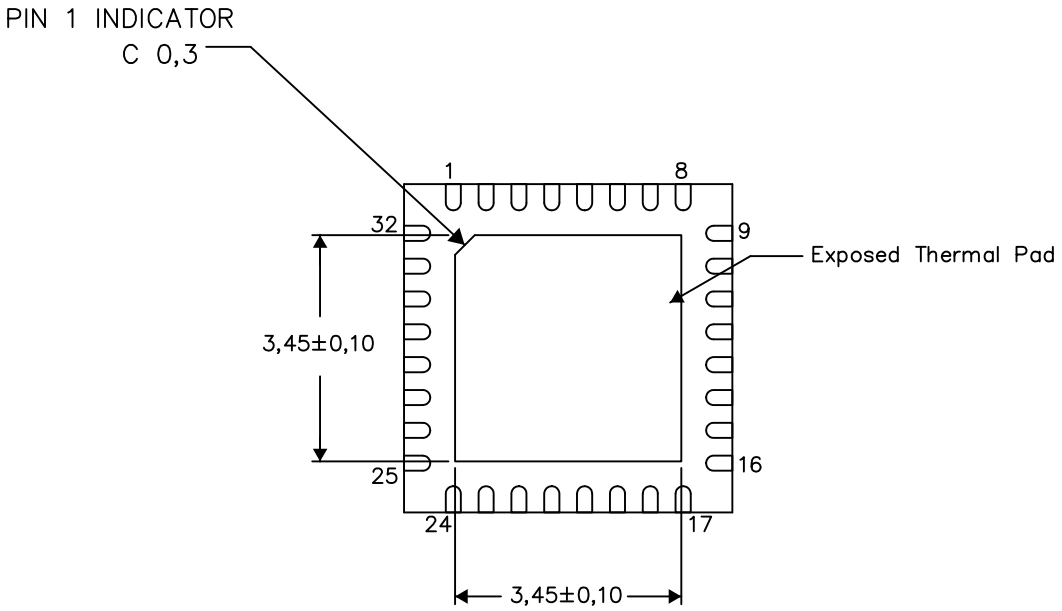

Bottom View

Exposed Thermal Pad Dimensions

4206356–2/Y 06/13

NOTE: A. All linear dimensions are in millimeters

RHB (S–PVQFN–N32) PLASTIC QUAD FLATPACK NO–LEAD

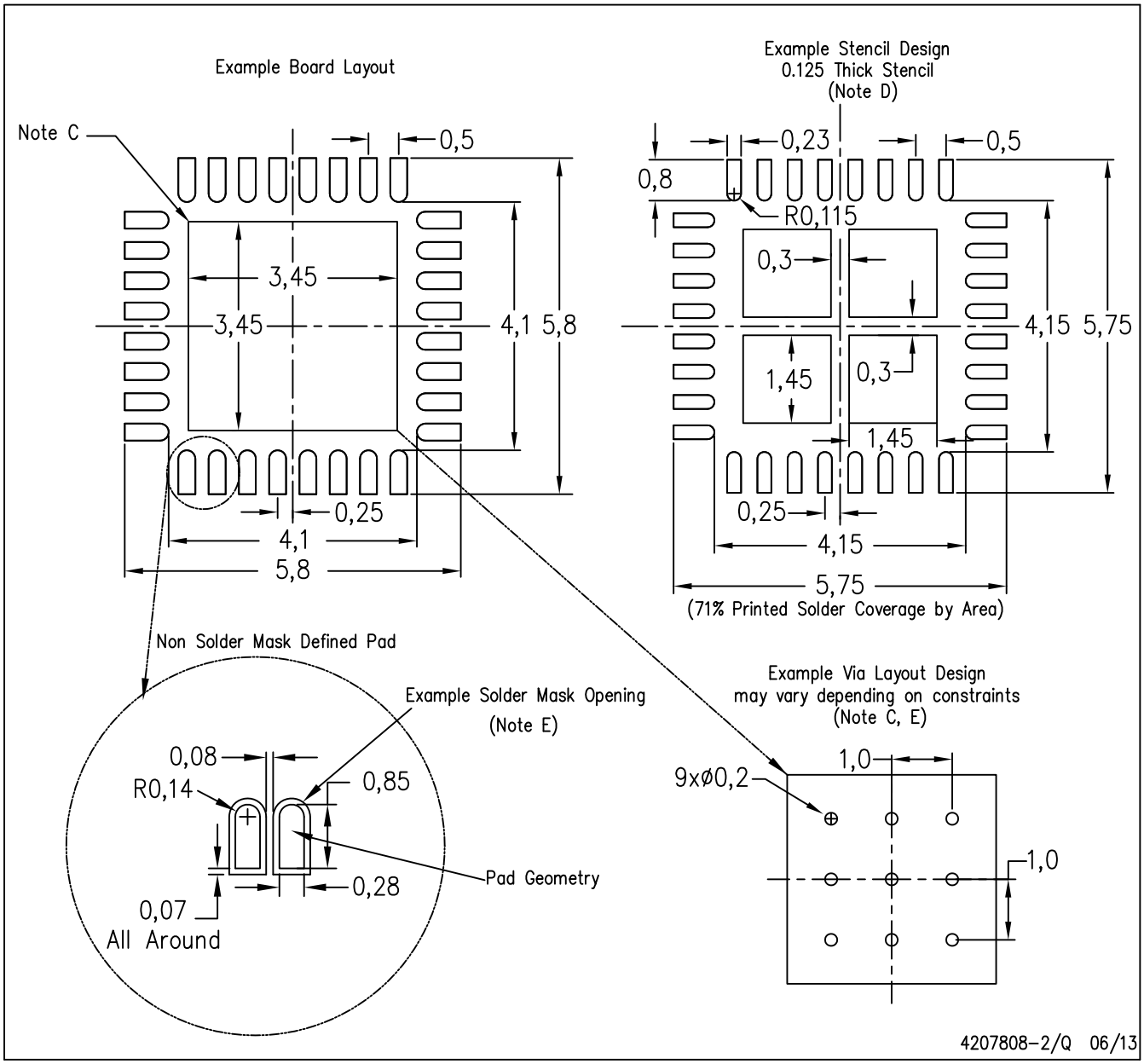

NOTES:
A. All linear dimensions are in millimeters.
B. This drawing is subject to change without notice.
C. This package is designed to be soldered to a thermal pad on the board. Refer to Application Note, Quad Flat–Pack Packages, Texas Instruments Literature No. SLUA271, and also the Product Data Sheets for specific thermal information, via requirements, and recommended board layout. These documents are available at www.ti.com <http://www.ti.com>.
D. Laser cutting apertures with trapezoidal walls and also rounding corners will offer better paste release. Customers should contact their board assembly site for stencil design recommendations. Refer to IPC 7525 for stencil design considerations.
E. Customers should contact their board fabrication site for recommended solder mask tolerances and via tenting recommendations for vias placed in the thermal pad.

RHM (S-PVQFN-N32) PLASTIC QUAD FLATPACK NO-LEAD

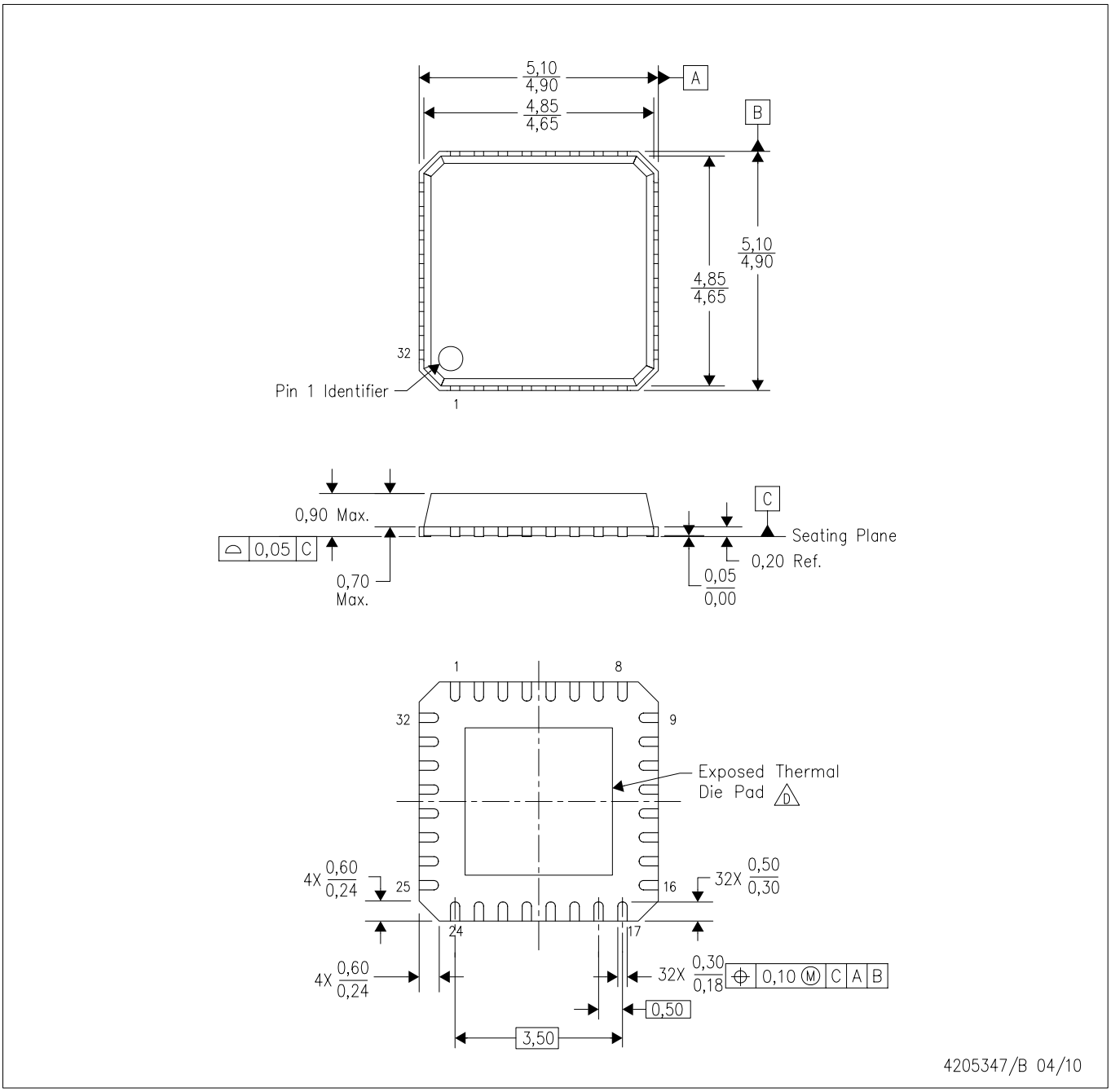

NOTES:
A. All linear dimensions are in millimeters. Dimensioning and tolerancing per ASME Y14.5M-1994.
B. This drawing is subject to change without notice.
C. QFN (Quad Flatpack No-Lead) Package configuration.
D. The package thermal pad must be soldered to the board for thermal and mechanical performance. See the Product Data Sheet for details regarding the exposed thermal pad dimensions.

RHM (S-PVQFN-N32) PLASTIC QUAD FLATPACK NO-LEAD

THERMAL INFORMATION

This package incorporates an exposed thermal pad that is designed to be attached directly to an external heatsink. The thermal pad must be soldered directly to the printed circuit board (PCB). After soldering, the PCB can be used as a heatsink. In addition, through the use of thermal vias, the thermal pad can be attached directly to the appropriate copper plane shown in the electrical schematic for the device, or alternatively, can be attached to a special heatsink structure designed into the PCB. This design optimizes the heat transfer from the integrated circuit (IC).

For information on the Quad Flatpack No-Lead (QFN) package and its advantages, refer to Application Report, QFN/SON PCB Attachment, Texas Instruments Literature No. SLUA271. This document is available at www.ti.com.

The exposed thermal pad dimensions for this package are shown in the following illustration.

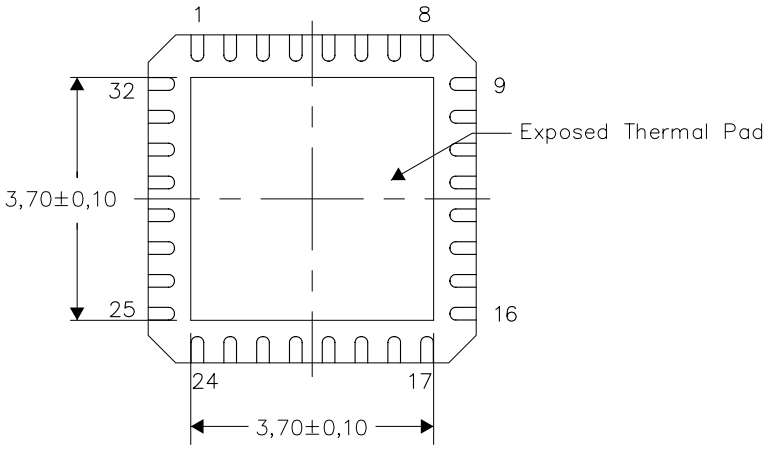

Bottom View

NOTE: All linear dimensions are in millimeters

Exposed Thermal Pad Dimensions

RHM (S-PVQFN-N32) PLASTIC QUAD FLATPACK NO-LEAD

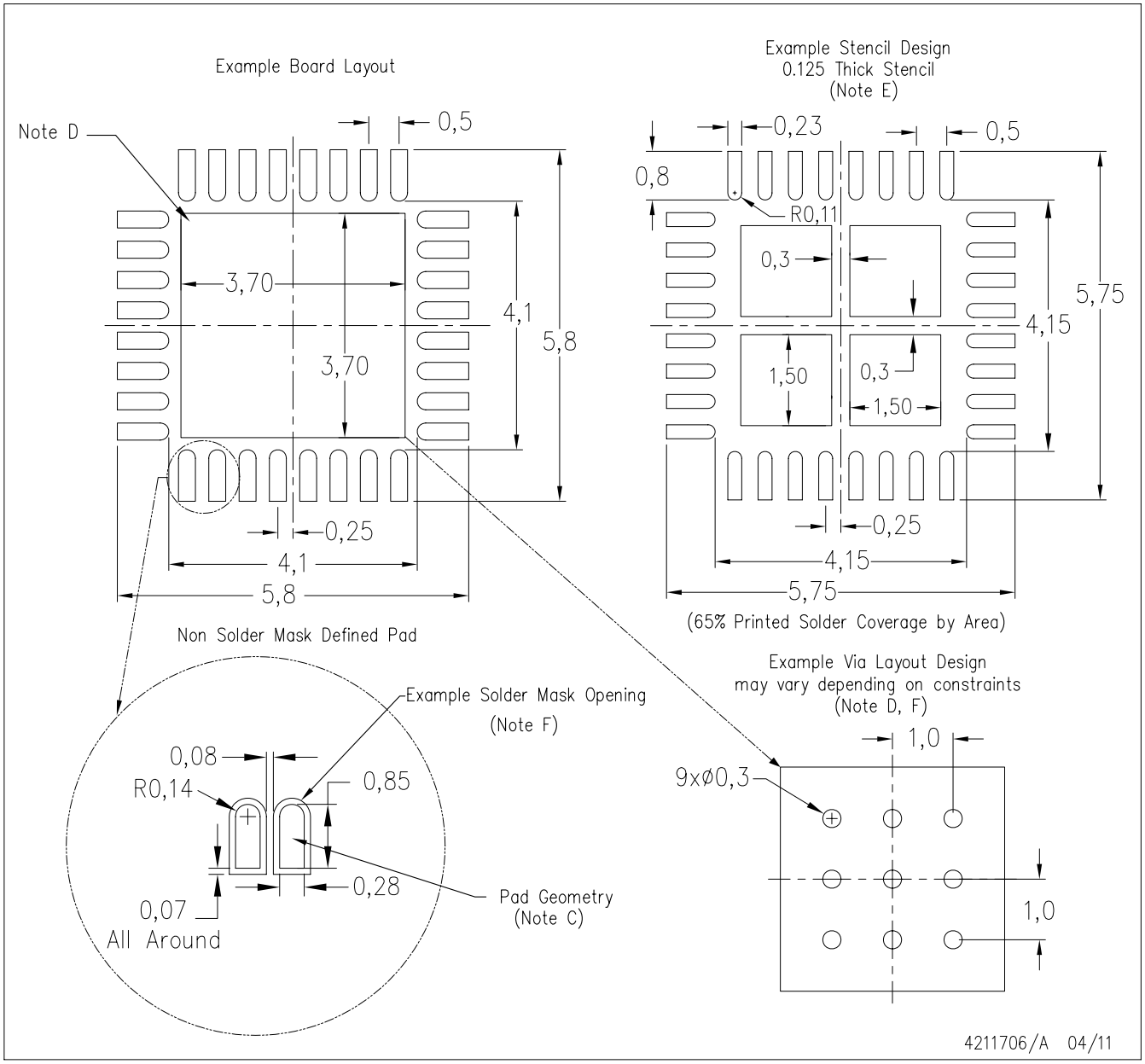

NOTES:
A. All linear dimensions are in millimeters.
B. This drawing is subject to change without notice.
C. Publication IPC-7351 is recommended for alternate designs.
D. This package is designed to be soldered to a thermal pad on the board. Refer to Application Note, Quad Flat-Pack Packages, Texas Instruments Literature No. SLUA271, and also the Product Data Sheets for specific thermal information, via requirements, and recommended board layout. These documents are available at www.ti.com <http://www.ti.com>.
E. Laser cutting apertures with trapezoidal walls and also rounding corners will offer better paste release. Customers should contact their board assembly site for stencil design recommendations. Refer to IPC 7525 for stencil design considerations.
F. Customers should contact their board fabrication site for recommended solder mask tolerances and via tenting recommendations for vias placed in the thermal pad.

IMPORTANT NOTICE

Texas Instruments Incorporated and its subsidiaries (TI) reserve the right to make corrections, enhancements, improvements and other changes to its semiconductor products and services per JESD46, latest issue, and to discontinue any product or service per JESD48, latest issue. Buyers should obtain the latest relevant information before placing orders and should verify that such information is current and complete. All semiconductor products (also referred to herein as “components”) are sold subject to TI’s terms and conditions of sale supplied at the time of order acknowledgment.

TI warrants performance of its components to the specifications applicable at the time of sale, in accordance with the warranty in TI’s terms and conditions of sale of semiconductor products. Testing and other quality control techniques are used to the extent TI deems necessary to support this warranty. Except where mandated by applicable law, testing of all parameters of each component is not necessarily performed.

TI assumes no liability for applications assistance or the design of Buyers’ products. Buyers are responsible for their products and applications using TI components. To minimize the risks associated with Buyers’ products and applications, Buyers should provide adequate design and operating safeguards.

TI does not warrant or represent that any license, either express or implied, is granted under any patent right, copyright, mask work right, or other intellectual property right relating to any combination, machine, or process in which TI components or services are used. Information published by TI regarding third-party products or services does not constitute a license to use such products or services or a warranty or endorsement thereof. Use of such information may require a license from a third party under the patents or other intellectual property of the third party, or a license from TI under the patents or other intellectual property of TI.

Reproduction of significant portions of TI information in TI data books or data sheets is permissible only if reproduction is without alteration and is accompanied by all associated warranties, conditions, limitations, and notices. TI is not responsible or liable for such altered documentation. Information of third parties may be subject to additional restrictions.

Resale of TI components or services with statements different from or beyond the parameters stated by TI for that component or service voids all express and any implied warranties for the associated TI component or service and is an unfair and deceptive business practice. TI is not responsible or liable for any such statements.

Buyer acknowledges and agrees that it is solely responsible for compliance with all legal, regulatory and safety-related requirements concerning its products, and any use of TI components in its applications, notwithstanding any applications-related information or support that may be provided by TI. Buyer represents and agrees that it has all the necessary expertise to create and implement safeguards which anticipate dangerous consequences of failures, monitor failures and their consequences, lessen the likelihood of failures that might cause harm and take appropriate remedial actions. Buyer will fully indemnify TI and its representatives against any damages arising out of the use of any TI components in safety-critical applications.

In some cases, TI components may be promoted specifically to facilitate safety-related applications. With such components, TI’s goal is to help enable customers to design and create their own end-product solutions that meet applicable functional safety standards and requirements. Nonetheless, such components are subject to these terms.

No TI components are authorized for use in FDA Class III (or similar life-critical medical equipment) unless authorized officers of the parties have executed a special agreement specifically governing such use.

Only those TI components which TI has specifically designated as military grade or “enhanced plastic” are designed and intended for use in military/aerospace applications or environments. Buyer acknowledges and agrees that any military or aerospace use of TI components which have ***not*** been so designated is solely at the Buyer's risk, and that Buyer is solely responsible for compliance with all legal and regulatory requirements in connection with such use.

TI has specifically designated certain components as meeting ISO/TS16949 requirements, mainly for automotive use. In any case of use of non-designated products, TI will not be responsible for any failure to meet ISO/TS16949.

Products		**Applications**	
Audio	www.ti.com/audio	Automotive and Transportation	www.ti.com/automotive
Amplifiers	amplifier.ti.com	Communications and Telecom	www.ti.com/communications
Data Converters	dataconverter.ti.com	Computers and Peripherals	www.ti.com/computers
DLP® Products	www.dlp.com	Consumer Electronics	www.ti.com/consumer-apps
DSP	dsp.ti.com	Energy and Lighting	www.ti.com/energy
Clocks and Timers	www.ti.com/clocks	Industrial	www.ti.com/industrial
Interface	interface.ti.com	Medical	www.ti.com/medical
Logic	logic.ti.com	Security	www.ti.com/security
Power Mgmt	power.ti.com	Space, Avionics and Defense	www.ti.com/space-avionics-defense
Microcontrollers	microcontroller.ti.com	Video and Imaging	www.ti.com/video
RFID	www.ti-rfid.com		
OMAP Applications Processors	www.ti.com/omap	**TI E2E Community**	e2e.ti.com
Wireless Connectivity	www.ti.com/wirelessconnectivity		

Mailing Address: Texas Instruments, Post Office Box 655303, Dallas, Texas 75265
Copyright © 2013, Texas Instruments Incorporated