TS324

Low Power Quad Operational Amplifiers

DIP-14

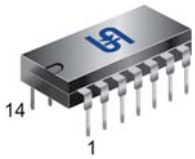

SOP-14

Pin Definition:

1. Output A	14. Output D
2. Input A (-)	13. Input D (-)
3. Input A (+)	12. Input D (+)
4. Vcc	11. Gnd
5. Input B (+)	10. Input C (+)
6. Input B (-)	9. Input C (-)
7. Output B	8. Output C

General Description

TS324 contains four independent high gain operational amplifiers with internal frequency compensation. The four op-amps use a split power supply. The device has low power supply current drain, regardless or the power supply voltage. The low power drain also makes the TS324 a good choice for battery operation. When your project calls for a traditional op-amp function, now you can streamline your design with a simple single power supply. Use ordinary +5V common to practically any digital system or personal computer application, without requiring an extra 15V power supply just to have the interface electronics you need. TS324 is a versatile, rugged workhorse with a thousand-and-one uses, from amplifying signals from a variety of transducers to dc gain blocks, or any op-amp function. The attached pages offer some recipes that will have your project cooking in no time.

Features

- Single supply operation: 3V to 32V
- Low input bias currents
- Internally compensated
- Common mode range extends to negative supply
- Single and split supply operation

Ordering Information

Part No.	Package	Packing
TS324CD14 C4	DIP-14	50pcs / Tube
TS324CS14 RL	SOP-14	2.5Kpcs / 13” Reel

Block Diagram

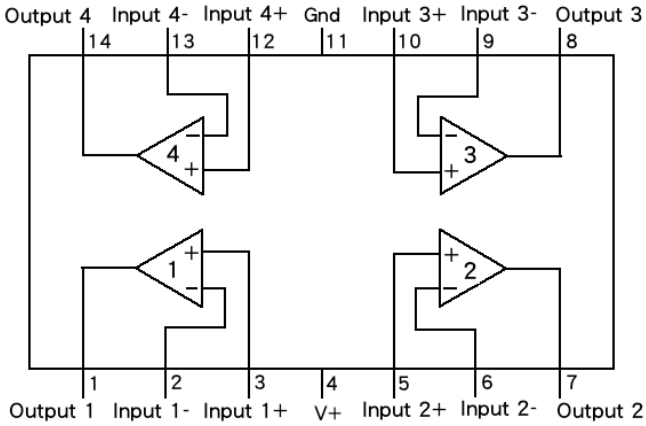

Absolute Maximum Rating

Parameter	Symbol	Limit	Unit
Supply Voltage	V_{CC}	+32 or ±16	V
Differential Input Voltage (Split Power Supplies)	V_{IDR}	32	V
Input Common Mode Voltage Range (note 1)	V_{ICR}	-0.3 to 32	V
Input Forward Current (note 2)	I_{IF}	50	mA
Output Short Circuit Duration	T_{SC}	Continuous	
Operating Temperature Range	T_{OPR}	0 ~ +70	^{o}C
Junction Temperature	T_J	+150	^{o}C
Storage Temperature Range	T_{STG}	-65 ~ +150	^{o}C

Note:

1, For supply voltages less than 32V for the TS324 the absolute maximum input voltage is equal to the supply voltage.

2, This input current will only exist when the voltage is negative at any of the input leads. Normal output states will reestablish when the input voltage returns to a voltage greater than -0.3V.

Electrical Characteristics (V_{CC} = 5V, Ta=25ºC; unless otherwise specified.)

Characteristics	Symbol	Min	Typ	Max	Unit
Input Offset Voltage V_{CC}= 5.0V to 30V, V_{IC}= 0V to V_{CC} -1.7 V, Vo= 1.4V, R_S= 0Ω $T_{LOW} \le T_A \le T_{HIGH}$	V_{IO}	-- --	2.0 --	7.0 9.0	mV
Average Temperature Coefficient of Input Offset Voltage	$\Delta V_{IO}/\Delta T$	--	7.0	--	uV/°C
Input Offset Current T_A=+25ºC $T_{LOW} \le Ta \le T_{HIGH}$	I_{IO}	-- --	5.0 --	50 150	nA
Average Temperature Coefficient of input Offset Current	$\Delta I_{IO}/\Delta T$	--	10	--	pA/°C
Input Bias Current T_A=+25ºC $T_{LOW} \le T_A \le T_{HIGH}$	I_{IB}	-- --	-90 --	-250 -500	nA
Input Common-Mode Voltage Range V_{CC} =30 V (Note1) V_{CC} =30 V, $T_{LOW} \le T_A \le T_{HIGH}$	V_{ICR}	0 0	-- --	28.3 28	V
Differential Input Voltage Range	V_{IDR}	--	--	V_{CC}	V
Large Signal Open-Loop Voltage Gain R_L = 2.0K, V_{CC} =15V, For Large V_O Swing, $T_{LOW} \le Ta \le T_{HIGH}$	A_{VOL}	25 15	100 --	-- --	V/mV
Channel Separation 1.0 KHz to 20KHz	--	--	-120	--	dB
Common Mode Rejection Ratio $R_S \le 10$ kΩ	CMRR	65	70	--	dB
Power Supply Rejection Ratio	PSRR	65	100	--	dB
Output Voltage -- High Limit V_{CC} = 30 V, R_L = 2 kΩ V_{CC} = 30 V, R_L = 10 kΩ	V_{OH}	26 27	-- 28	-- --	V
Output Voltage -- Low Limit V_{CC} = 5.0 V, R_L = 10 kΩ	V_{OL}	--	5.0	20	mV
Output Source Current V_{ID}=+1.0V,V_{CC}=15V	I_{O+}	20	40	--	mA
Output Sink Current V_{ID} = -1.0 V, V_{CC} = 15 V V_{ID} = -1.0 V, V_O = 200 mV	I_{O-}	10 12	20 50	-- --	mA uA
Output Short Circuit to Ground (Note 2)	I_{OS}	--	40	60	mA
Power Supply Current V_{CC} = 30 V, V_O = 0 V, R_L = ∞ V_{CC} = 5.0 V, V_O = 0 V, R_L = ∞	I_{CC}	-- --	1.5 0.7	3.0 1.2	mA

Notes

1, The input common mode voltage or either input signal voltage should not be allowed to go negative by more than 0.3 V. The upper end of the common mode voltage range is V_{CC} 17V, but either or both inputs can go to +32V.

2, Short circuits from the output to V_{CC} can cause excessive heating and eventual destruction. Destructive dissipation can recruit from simultaneous shorts on all amplifiers.

Electrical Characteristics Curve

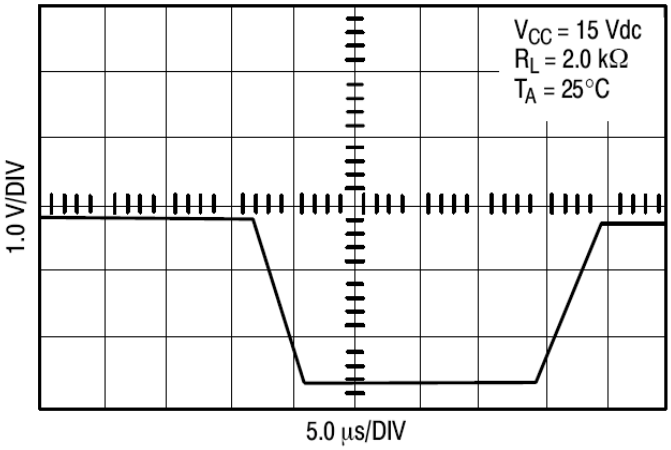

Figure 1. Large Signal Voltage Follower Response

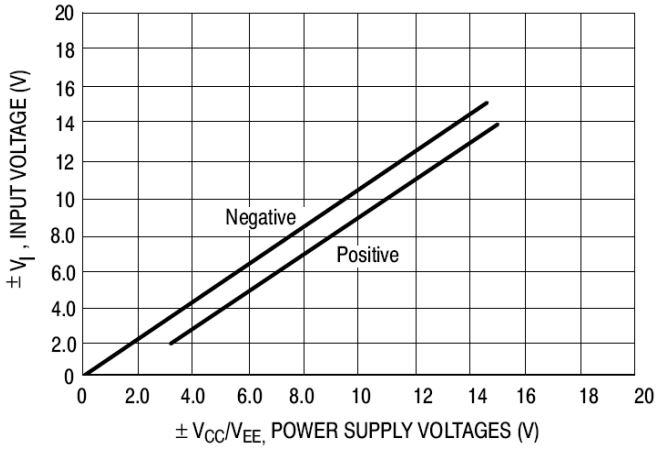

Figure 2. Input Voltage Range

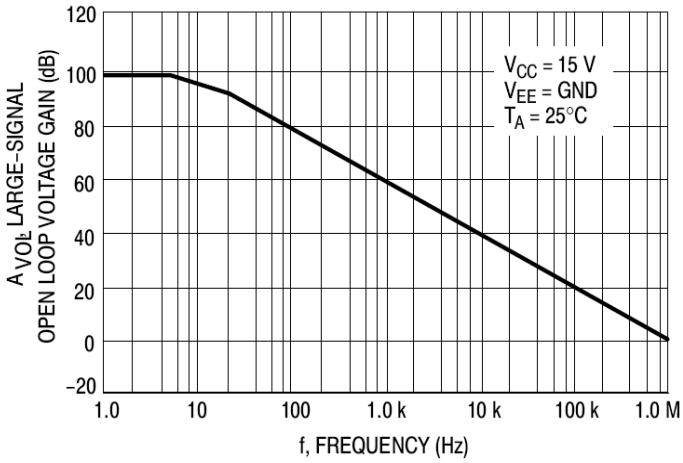

Figure 3. Open Loop Frequency

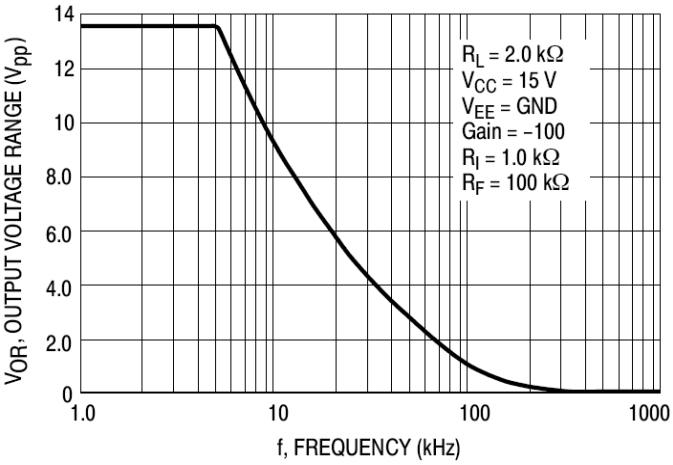

Figure 4. Large Signal Frequency Response

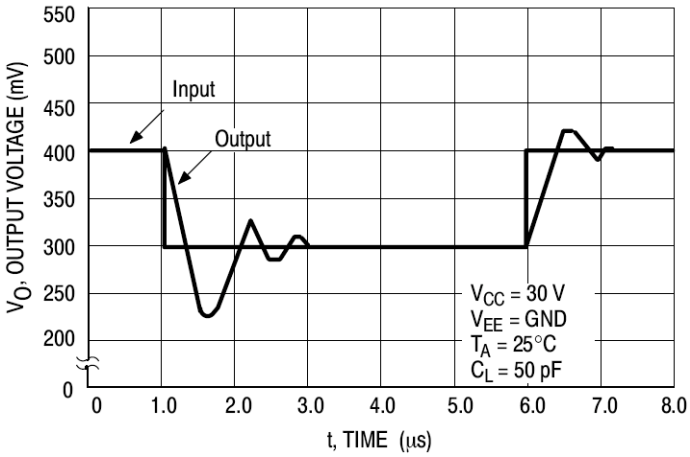

Figure 5. Small-Signal Voltage Follower Pulse Response (Noninverting)

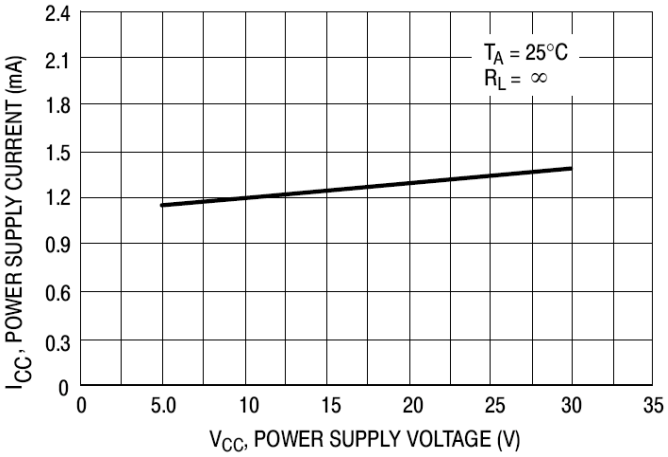

Figure 6. Power Supply Current vs. Supply Voltage

Application Description

The TS324 made using four internally compensated, two-stage operational amplifiers. The first stage performs not only the first stage gain function but also performs the level shifting and transconductance reduction functions. By reducing the transconductance, a smaller compensation capacitor (only 5.0pF) can be employed, thus saving chip area. Another feature of this input stage is that the input common mode range can include the negative supply or ground, in single supply operation, without saturating either the input devices or the differential to single-ended converter. The second stage consists of a standard current source load amplifier stage.

Each amplifier is biased from an internal-voltage regulator, and which has a low temperature coefficient thus giving each amplifier good temperature characteristics as well as excellent power supply rejection.

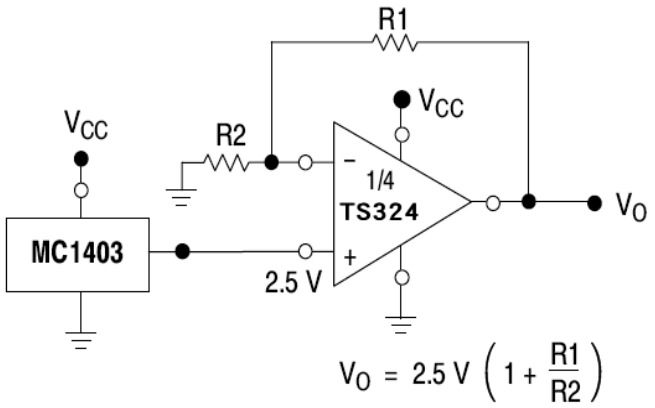

Figure 7. Voltage Reference

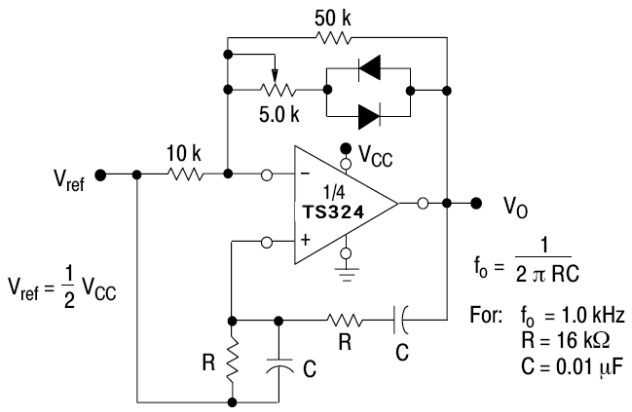

Figure 8. Wien Bridge Oscillator

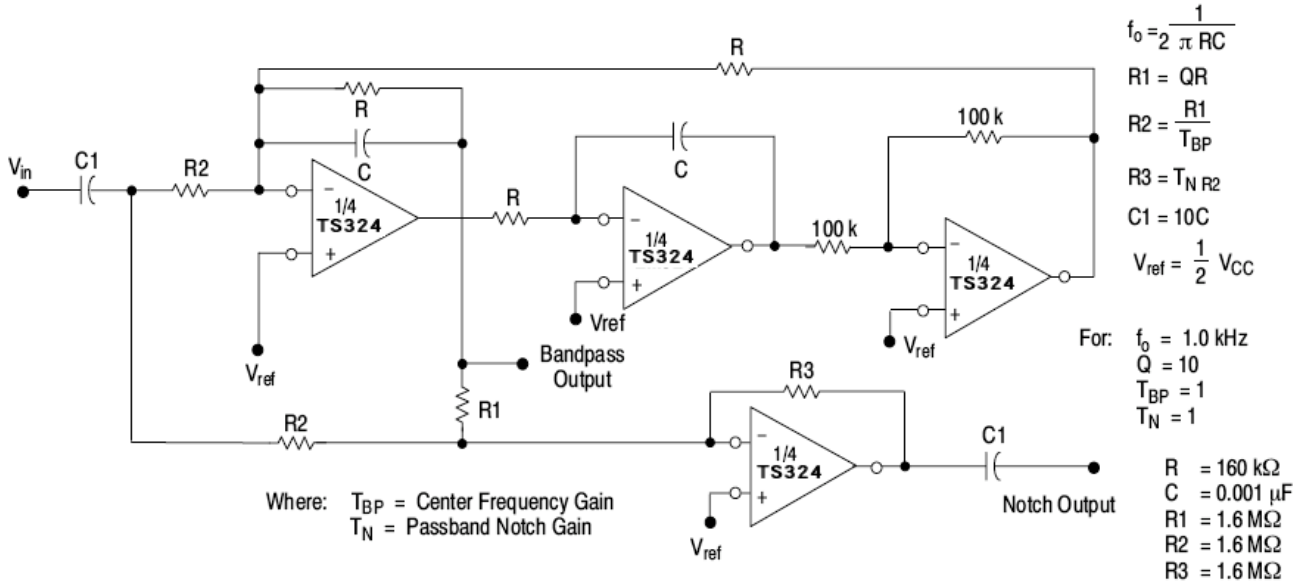

Figure 9. Bi-Quad Filter

Application Description (Continues)

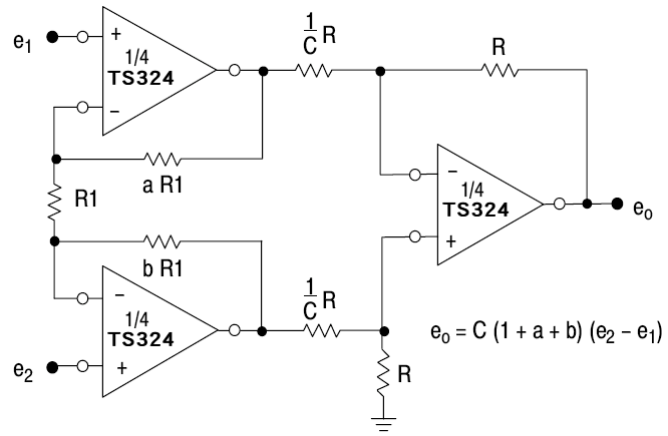

Figure 10. High Impedance Differential Amplifier

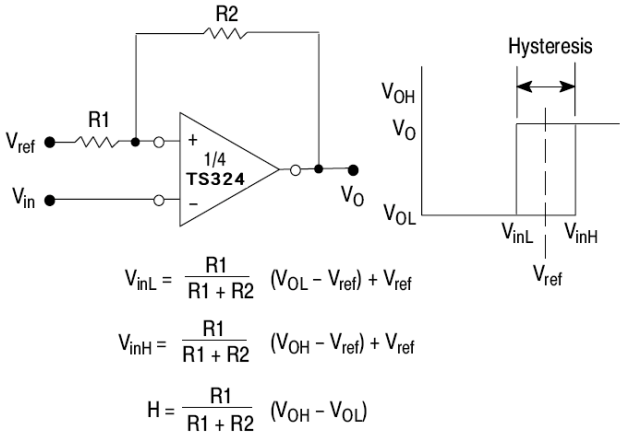

Figure 11. Comparator with Hysteresis

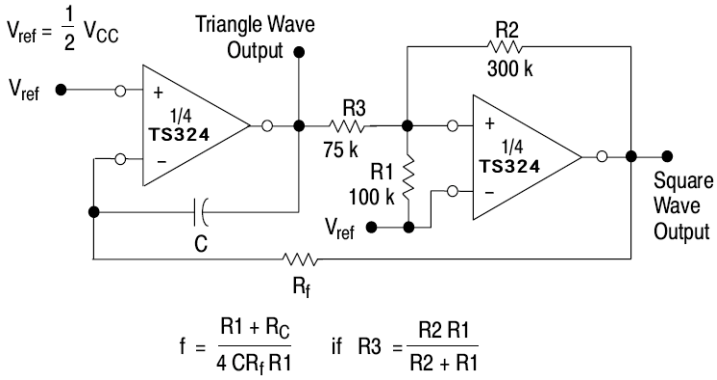

Figure 12. Function Generator

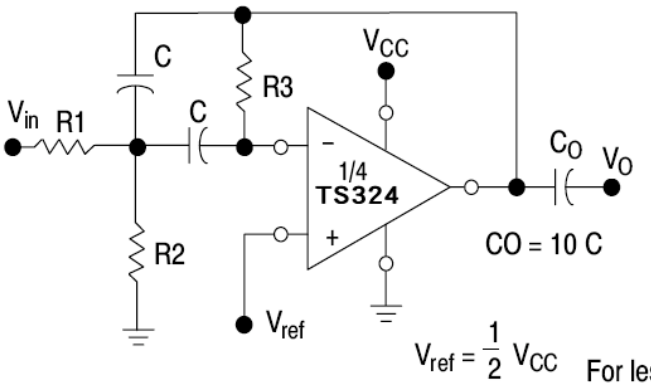

Given: f_o = center frequency

$A(f_o)$ = gain at center frequency

Choose value f_o, C

Then: $R3 = \frac{Q}{\pi f_o C}$

$R1 = \frac{R3}{2 A(f_o)}$

$R2 = \frac{R1\ R3}{4Q^2 R1 - R3}$

For less than 10% error from operational amplifier, $\frac{Q_o f_o}{BW} < 0.1$

where f_o and BW are expressed in Hz.

If source impedance varies, filter may be preceded with voltage follower buffer to stabilize filter parameters.

Figure 13. Multiple Feedback Bandpass Filter

SOP-14 Mechanical Drawing

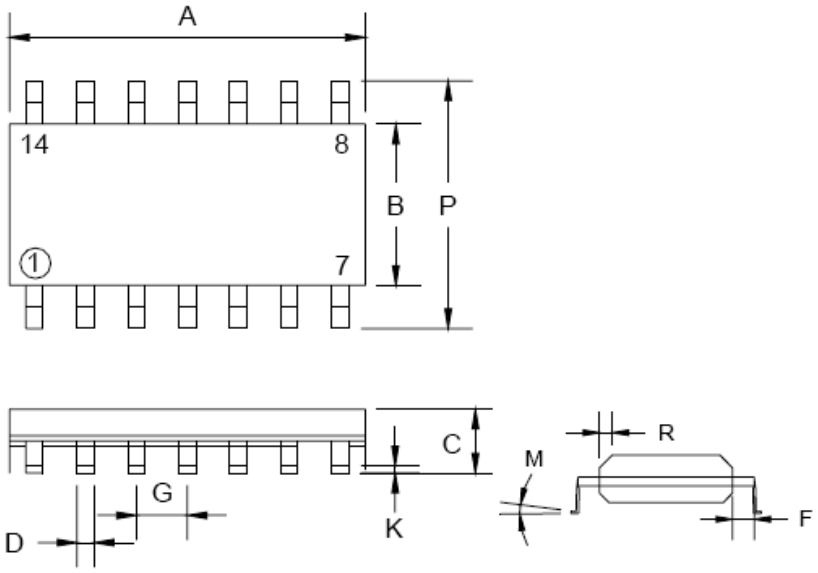

SOP-14 DIMENSION				
DIM	MILLIMETERS		INCHES	
	MIN	MAX	MIN	MAX
A	8.55	8.75	0.337	0.344
B	3.80	4.00	0.150	0.157
C	1.35	1.75	0.054	0.068
D	0.35	0.49	0.014	0.019
F	0.40	1.25	0.016	0.049
G	1.27 (typ)		0.05 (typ)	
K	0.10	0.25	0.004	0.009
M	0°	7°	0°	7°
P	5.80	6.20	0.229	0.244
R	0.25	0.50	0.010	0.019

Marking Diagram

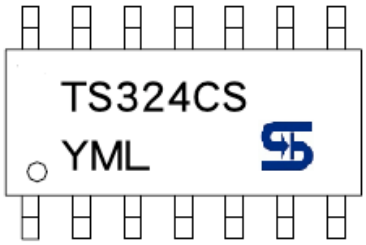

Y = Year Code
M = Month Code
(**A**=Jan, **B**=Feb, **C**=Mar, **D**=Apl, **E**=May, **F**=Jun, **G**=Jul, **H**=Aug, **I**=Sep, **J**=Oct, **K**=Nov, **L**=Dec)
L = Lot Code

DIP-14 Mechanical Drawing

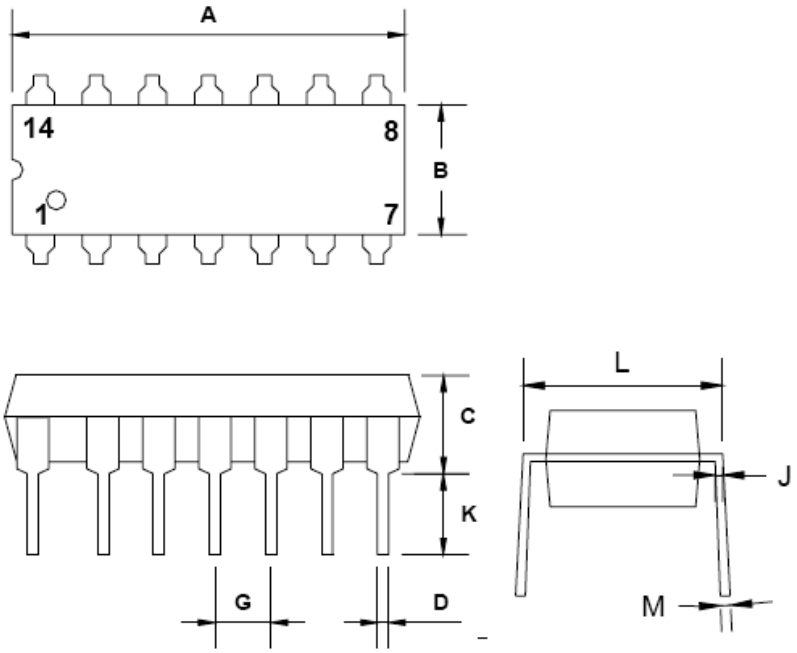

DIP-14 DIMENSION				
DIM	MILLIMETERS		INCHES	
	MIN	MAX	MIN	MAX
A	18.55	19.56	0.730	0.770
B	6.22	6.48	0.245	0.255
C	3.18	4.45	0.125	0.135
D	0.35	0.55	0.019	0.020
G	2.54 (typ)		0.10 (typ)	
J	0.29	0.31	0.011	0.012
K	3.25	3.35	0.128	0.132
L	7.75	8.00	0.305	0.315
M	--	10°	--	10°

Marking Diagram

Y = Year Code
M = Month Code
(**A**=Jan, **B**=Feb, **C**=Mar, **D**=Apl, **E**=May, **F**=Jun, **G**=Jul, **H**=Aug, **I**=Sep, **J**=Oct, **K**=Nov, **L**=Dec)
L = Lot Code

Notice

Specifications of the products displayed herein are subject to change without notice. TSC or anyone on its behalf, assumes no responsibility or liability for any errors or inaccuracies.

Information contained herein is intended to provide a product description only. No license, express or implied, to any intellectual property rights is granted by this document. Except as provided in TSC's terms and conditions of sale for such products, TSC assumes no liability whatsoever, and disclaims any express or implied warranty, relating to sale and/or use of TSC products including liability or warranties relating to fitness for a particular purpose, merchantability, or infringement of any patent, copyright, or other intellectual property right.

The products shown herein are not designed for use in medical, life-saving, or life-sustaining applications. Customers using or selling these products for use in such applications do so at their own risk and agree to fully indemnify TSC for any damages resulting from such improper use or sale.