LMX2487E 7.5 GHz High Performance Delta-Sigma Low Power Dual PLLatinum™ Frequency Synthesizers with 3.0 GHz Integer PLL

Check for Samples: LMX2487E

FEATURES

- **Quadruple Modulus Prescalers for Lower Divide Ratios**
  - **RF PLL: 16/17/20/21 or 32/33/36/37**
  - **IF PLL: 8/9 or 16/17**
- **Advanced Delta Sigma Fractional Compensation**
  - **12 Bit or 22 Bit Selectable Fractional Modulus**
  - **Up to 4th Order Programmable Delta-Sigma Modulator**
- **Features for Improved Lock Times and Programming**
  - **Fastlock / Cycle Slip Reduction**
  - **Integrated Time-out Counter**
  - **Single Word Write to Change Frequencies with Fastlock**
- **Wide Operating Range**
  - **LMX2487E RF PLL: 3.0 GHz to 7.5 GHz**
- **Useful Features**
  - **Digital Lock Detect Output**
  - **Hardware and Software Power-down Control**
  - **On-chip Crystal Reference Frequency Doubler.**
  - **RF Phase Comparison Frequency up to 50 MHz**
  - **2.5 to 3.6 Volt Operation with I_{CC} = 8.5 mA at 3.0 V**

APPLICATIONS

- **Cellular Phones and Base Stations**
- **Direct Digital Modulation Applications**
- **Satellite and Cable TV Tuners**
- **WLAN Standards**

DESCRIPTION

The LMX2487E is a low power, high performance delta-sigma fractional-N PLL with an auxiliary integer-N PLL. It is fabricated using TI's advanced process.

With delta-sigma architecture, fractional spurs at lower offset frequencies are pushed to higher frequencies outside the loop bandwidth. The ability to push close in spur and phase noise energy to higher frequencies is a direct function of the modulator order. Unlike analog compensation, the digital feedback technique used in the LMX2487E is highly resistant to changes in temperature and variations in wafer processing. The LMX2487E delta-sigma modulator is programmable up to fourth order, which allows the designer to select the optimum modulator order to fit the phase noise, spur, and lock time requirements of the system.

Serial data for programming the LMX2487E is transferred via a three line high speed (20 MHz) MICROWIRE interface. The LMX2487E offers fine frequency resolution, low spurs, fast programming speed, and a single word write to change the frequency. This makes it ideal for direct digital modulation applications, where the N counter is directly modulated with information. The LMX2487E is available in a 24 lead 4.0 X 4.0 X 0.8 mm WQFN package.

Functional Block Diagram

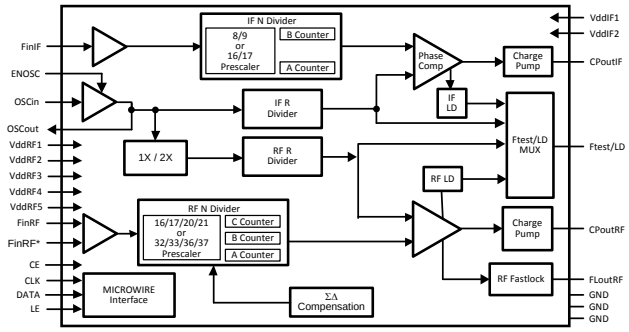

Please be aware that an important notice concerning availability, standard warranty, and use in critical applications of Texas Instruments semiconductor products and disclaimers thereto appears at the end of this data sheet.

PLLatinum is a trademark of Texas Instruments.
All other trademarks are the property of their respective owners.

PRODUCTION DATA information is current as of publication date. Products conform to specifications per the terms of the Texas Instruments standard warranty. Production processing does not necessarily include testing of all parameters.

Copyright © 2007–2013, Texas Instruments Incorporated

Connection Diagram

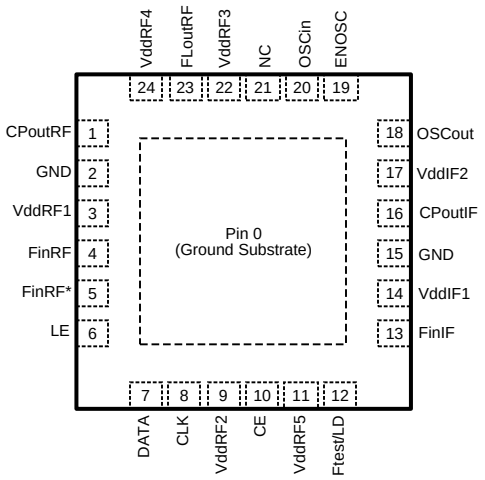

Figure 1. Top View
24-Pin WQFN (RTW)

PIN DESCRIPTIONS

Pin #	Pin Name	I/O	Pin Description
0	GND	-	Ground Substrate. This is on the bottom of the package and must be grounded.
1	CPoutRF	O	RF PLL charge pump output.
2	GND	-	RF PLL analog ground.
3	VddRF1	-	RF PLL analog power supply.
4	FinRF	I	RF PLL high frequency input pin.
5	FinRF*	I	RF PLL complementary high frequency input pin. Shunt to ground with a 100 pF capacitor.
6	LE	I	MICROWIRE Load Enable. High impedance CMOS input. Data stored in the shift registers is loaded into the internal latches when LE goes HIGH
7	DATA	I	MICROWIRE Data. High impedance binary serial data input.
8	CLK	I	MICROWIRE Clock. High impedance CMOS Clock input. Data for the various counters is clocked into the 24 bit shift register on the rising edge
9	VddRF2	-	Power supply for RF PLL digital circuitry.
10	CE	I	Chip Enable control pin. Must be pulled high for normal operation.
11	VddRF5	I	Power supply for RF PLL digital circuitry.
12	Ftest/LD	O	Test frequency output / Lock Detect.
13	FinIF	I	IF PLL high frequency input pin.
14	VddIF1	-	IF PLL analog power supply.
15	GND	-	IF PLL digital ground.
16	CPoutIF	O	IF PLL charge pump output
17	VddIF2	-	IF PLL power supply.
18	OSCout	O	Buffered output of the OSCin signal.
19	ENOSC	I	Oscillator enable. When this is set to high, the OSCout pin is enabled regardless of the state of other pins or register bits.
20	OSCin	I	Reference Input.
21	NC	I	This pin must be left open.
22	VddRF3	-	Power supply for RF PLL digital circuitry.
23	FLoutRF	O	RF PLL Fastlock Output. Also functions as Programmable TRI-STATE CMOS output.
24	VddRF4	-	RF PLL analog power supply.

Copyright © 2007–2013, Texas Instruments Incorporated

These devices have limited built-in ESD protection. The leads should be shorted together or the device placed in conductive foam during storage or handling to prevent electrostatic damage to the MOS gates.

Absolute Maximum Ratings (1)(2)

Parameter	Symbol	Value			Units
		Min	Typ	Max	
Power Supply Voltage	V_{CC}	-0.3		4.25	V
Voltage on any pin with GND = 0V	V_i	-0.3		V_{CC}+0.3	V
Storage Temperature Range	T_s	-65		+150	°C
Lead Temperature (Solder 4 sec.)	T_L			+260	°C

(1) "Absolute Maximum Ratings" indicate limits beyond which damage to the device may occur. "Recommended Operating Conditions" indicate conditions for which the device is intended to be functional, but do not ensure specific performance limits. For ensured specifications and test conditions, see Electrical Characteristics. The ensured specifications apply only for the test conditions listed. The voltage at all the power supply pins of VddRF1, VddRF2, VddRF3, VddRF4, VddRF5, VddIF1 and VddIF2 must be the same. V_{CC} will be used to refer to the voltage at these pins and I_{CC} will be used to refer to the sum of all currents through all these power pins.
(2) This Device is a high performance RF integrated circuit with an ESD rating < 2 kV and is ESD sensitive. Handling and assembly of this device should only be done at ESD-free workstations.

Recommended Operating Conditions

Parameter	Symbol	Value			Units
		Min	Typ	Max	
Power Supply Voltage (1)	V_{CC}	2.5	3.0	3.6	V
Operating Temperature	T_A	-40	25	+85	°C

(1) "Absolute Maximum Ratings" indicate limits beyond which damage to the device may occur. "Recommended Operating Conditions" indicate conditions for which the device is intended to be functional, but do not ensure specific performance limits. For ensured specifications and test conditions, see Electrical Characteristics. The ensured specifications apply only for the test conditions listed. The voltage at all the power supply pins of VddRF1, VddRF2, VddRF3, VddRF4, VddRF5, VddIF1 and VddIF2 must be the same. V_{CC} will be used to refer to the voltage at these pins and I_{CC} will be used to refer to the sum of all currents through all these power pins.

Electrical Characteristics

(V_{CC} = 3.0V; -40°C ≤ T_A ≤ +85°C unless otherwise specified)

Symbol	Parameter	Conditions	Value			Units
			Min	Typ	Max	
Icc PARAMETERS						
I_{CC}RF	Power Supply Current, RF Synthesizer	IF PLL OFF RF PLL ON Charge Pump TRI-STATE		5.7		mA
I_{CC}IF	Power Supply Current, IF Synthesizer	IF PLL ON RF PLL OFF Charge Pump TRI-STATE		2.5		mA
I_{CC}TOTAL	Power Supply Current, Entire Synthesizer	IF PLL ON RF PLL ON Charge Pump TRI-STATE		8.5		mA
I_{CC}PD	Power Down Current	CE = ENOSC = 0V CLK, DATA, LE = 0V		< 1		µA

Copyright © 2007–2013, Texas Instruments Incorporated

Electrical Characteristics (continued)

(V_{CC} = 3.0V; -40°C ≤ T_A ≤ +85°C unless otherwise specified)

Symbol	Parameter		Conditions		Value			Units
					Min	Typ	Max	
RF SYNTHESIZER PARAMETERS								
f_{FinRF}	Operating Frequency	LMX2487E	RF_P = 16		3000		4000	MHz
			RF_P = 32		3000		7500	
p_{FinRF}	Input Sensitivity		3-6 GHz		-10		0	dBm
			6-7.5 GHz		-5		5	
f_{COMP}	Phase Detector Frequency(1)						50	MHz
$I_{CPoutRF}$SRCE	RF Charge Pump Source Current(2)		RF_CPG = 0 $V_{CPoutRF} = V_{CC}/2$			95		µA
			RF_CPG = 1 $V_{CPoutRF} = V_{CC}/2$			190		µA
			...			...		µA
			RF_CPG = 15 $V_{CPoutRF} = V_{CC}/2$			1520		µA
$I_{CPoutRF}$SINK	RF Charge Pump Sink Current(2)		RF_CPG = 0 $V_{CPoutRF} = V_{CC}/2$			-95		µA
			RF_CPG = 1 $V_{CPoutRF} = V_{CC}/2$			-190		µA
			...			...		µA
			RF_CPG = 15 $V_{CPoutRF} = V_{CC}/2$			-1520		µA
$I_{CPoutRF}$TRI	RF Charge Pump TRI-STATE Current Magnitude		0.5 ≤ $V_{CPoutRF}$ ≤ V_{CC} -0.5			2	10	nA
| $I_{CPoutRF}$%MIS |	Magnitude of RF CP Sink vs. CP Source Mismatch		$V_{CPoutRF} = V_{CC}/2$ T_A = 25°C	RF_CPG > 2		3	10	%
				RF_CPG ≤ 2		3	13	%
| $I_{CPoutRF}$%V |	Magnitude of RF CP Current vs. CP Voltage		0.5 ≤ $V_{CPoutRF}$ ≤ V_{CC} -0.5 T_A = 25°C			2	8	%
| $I_{CPoutRF}$%T |	Magnitude of RF CP Current vs. Temperature		$V_{CPoutRF} = V_{CC}/2$			4		%
IF SYNTHESIZER PARAMETERS								
f_{FinIF}	Operating Frequency		IF_P = 8		250		2000	MHz
			IF_P = 16		250		3000	
p_{FinIF}	IF Input Sensitivity				-10		+5	dBm
f_{COMP}	Phase Detector Frequency						10	MHz
$I_{CPoutIF}$SRCE	IF Charge Pump Source Current		$V_{CPoutIF} = V_{CC}/2$			3.5		mA
$I_{CPoutIF}$SINK	IF Charge Pump Sink Current		$V_{CPoutIF} = V_{CC}/2$			-3.5		mA
$I_{CPoutIF}$TRI	IF Charge Pump TRI-STATE Current Magnitude		0.5 ≤ $V_{CPoutIF}$ ≤ V_{CC} RF -0.5			2	10	nA
| $I_{CPoutIF}$%MIS |	Magnitude of IF CP Sink vs. CP Source Mismatch		$V_{CPoutIF} = V_{CC}/2$ T_A = 25°C			1	8	%
| $I_{CPoutIF}$%V |	Magnitude of IF CP Current vs. CP Voltage		0.5 ≤ $V_{CPoutIF}$ ≤ V_{CC} -0.5 T_A = 25°C			4	10	%
| $I_{CPoutIF}$%TEMP	Magnitude of IF CP Current vs. Temperature		$V_{CPoutIF} = V_{CC}/2$			4		%
OSCILLATOR PARAMETERS								
f_{OSCin}	Oscillator Operating Frequency		OSC2X = 0		5		110	MHz
			OSC2X = 1		5		20	MHz
v_{OSCin}	Oscillator Input Sensitivity				0.5		V_{CC}	V_{P-P}
I_{OSCin}	Oscillator Input Current				-100		100	µA
SPURS								
	Spurs in band(3)					-55		dBc

(1) For Phase Detector Frequencies above 20 MHz, Cycle Slip Reduction (CSR) may be required. Legal divide ratios are also required.
(2) Refer to table in RF_CPG – RF PLL Charge Pump Gain for complete listing of charge pump currents.
(3) In order to measure the in-band spur, the fractional word is chosen such that when reduced to lowest terms, the fractional numerator is one. The spur offset frequency is chosen to be the comparison frequency divided by the reduced fractional denominator. The loop bandwidth must be sufficiently wide to negate the impact of the loop filter. Measurement conditions are: Spur Offset Frequency = 10 kHz, Loop Bandwidth = 100 kHz, Fraction = 1/2000, Comparison Frequency = 20 MHz, RF_CPG = 7, DITH = 0, VCO Frequency = 3 GHz, and a 4th Order Modulator (FM = 0). These are relatively consistent over tuning range.

Copyright © 2007–2013, Texas Instruments Incorporated

Electrical Characteristics (continued)

(V_{CC} = 3.0V; -40°C ≤ T_A ≤ +85°C unless otherwise specified)

Symbol	Parameter	Conditions	Value			Units
			Min	Typ	Max	
PHASE NOISE						
$L_{F1Hz}RF$	RF Synthesizer Normalized Phase Noise Contribution(4)	RF_CPG = 0		-202		dBc/Hz
		RF_CPG = 1		-204		
		RF_CPG = 3		-206		
		RF_CPG = 7		-210		
		RF_CPG = 15		-210		
$L_{F1Hz}IF$	IF Synthesizer Normalized Phase Noise Contribution			-209		dBc/Hz
DIGITAL INTERFACE (DATA, CLK, LE, ENOSC, CE, Ftest/LD, FLoutRF)						
V_{IH}	High-Level Input Voltage		1.6		V_{CC}	V
V_{IL}	Low-Level Input Voltage				0.4	V
I_{IH}	High-Level Input Current	$V_{IH} = V_{CC}$	-1.0		1.0	µA
I_{IL}	Low-Level Input Current	V_{IL} = 0 V	-1.0		1.0	µA
V_{OH}	High-Level Output Voltage	I_{OH} = -500 µA	V_{CC}-0.4			V
V_{OL}	Low-Level Output Voltage	I_{OL} = 500 µA			0.4	V
MICROWIRE INTERFACE TIMING						
t_{CS}	Data to Clock Set Up Time	See Figure 2	25			ns
t_{CH}	Data to Clock Hold Time	See Figure 2	8			ns
t_{CWH}	Clock Pulse Width High	See Figure 2	25			ns
t_{CWL}	Clock Pulse Width Low	See Figure 2	25			ns
t_{ES}	Clock to Load Enable Set Up Time	See Figure 2	25			ns
t_{EW}	Load Enable Pulse Width	See Figure 2	25			ns

(4) Normalized Phase Noise Contribution is defined as: $L_N(f) = L(f) – 20\log(N) – 10\log(f_{COMP})$ where L(f) is defined as the single side band phase noise measured at an offset frequency, f, in a 1 Hz Bandwidth. The offset frequency, f, must be chosen sufficiently smaller than the PLL loop bandwidth, yet large enough to avoid substantial phase noise contribution from the reference source. Measurement conditions are: Offset Frequency = 11 kHz, Loop Bandwidth = 100 kHz for RF_CPG = 7, Fraction = 1/2000, Comparison Frequency = 20 MHz, FM = 0, DITH = 0, VCO Frequency = 3 GHz.

MICROWIRE Input Timing Diagram

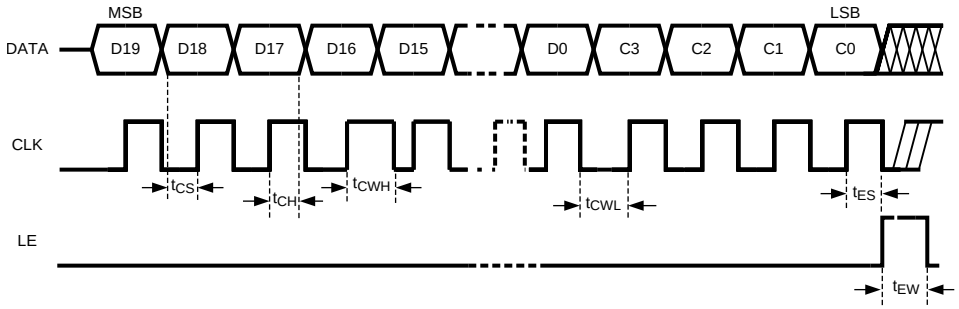

Figure 2. MICROWIRE Input Timing Diagram

Typical Performance Characterstics: Sensitivity

NOTE

Typical performance characteristics do not imply any sort of ensured specification. Ensured specifications are in Electrical Characteristics.

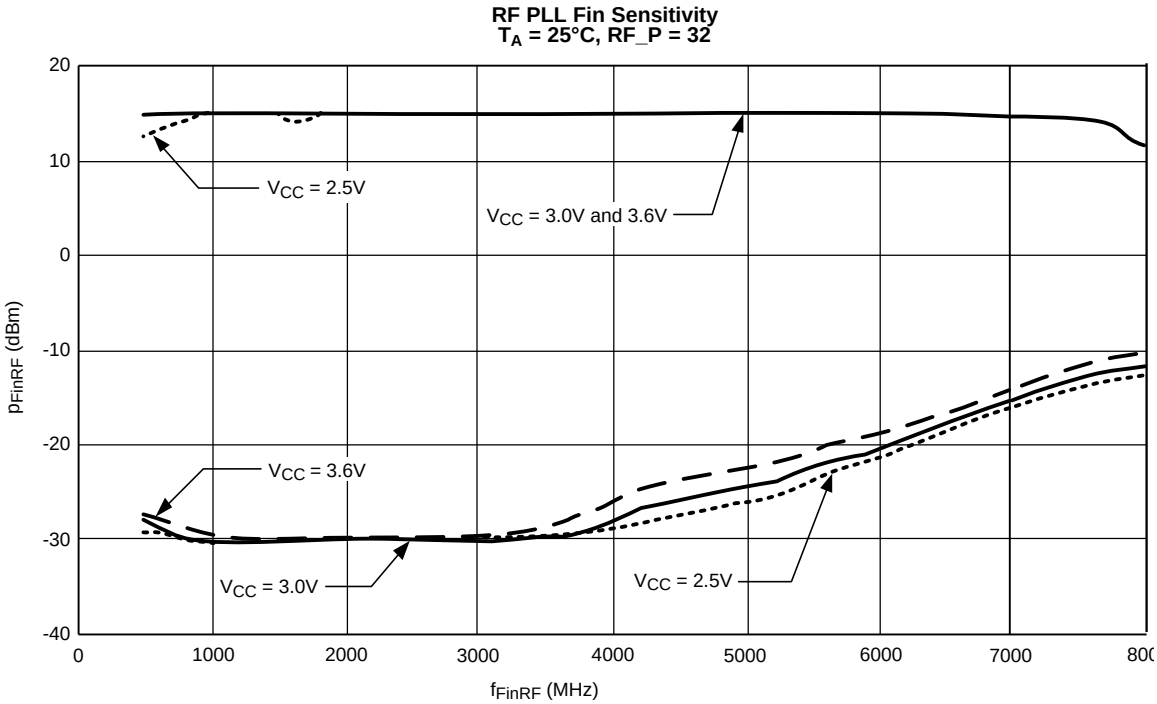

Figure 3.

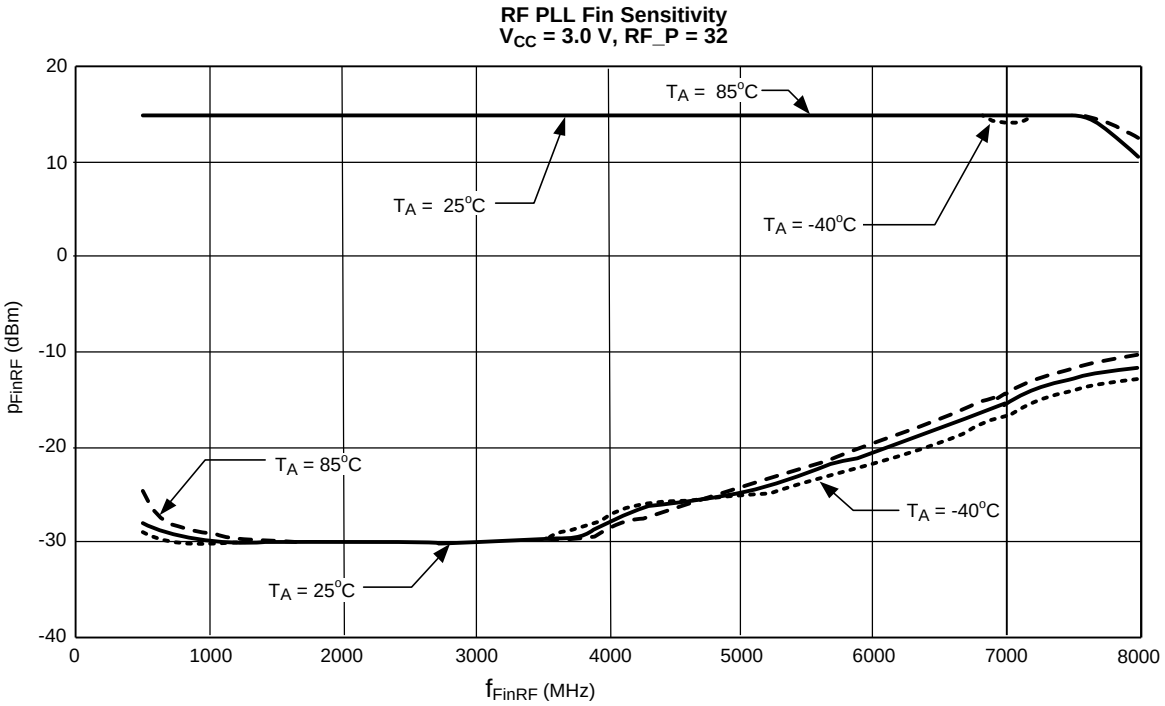

Figure 4.

Copyright © 2007–2013, Texas Instruments Incorporated

Typical Performance Characterstics: Sensitivity (continued)

IF PLL Fin Sensitivity
T_A = 25°C, IF_P = 16

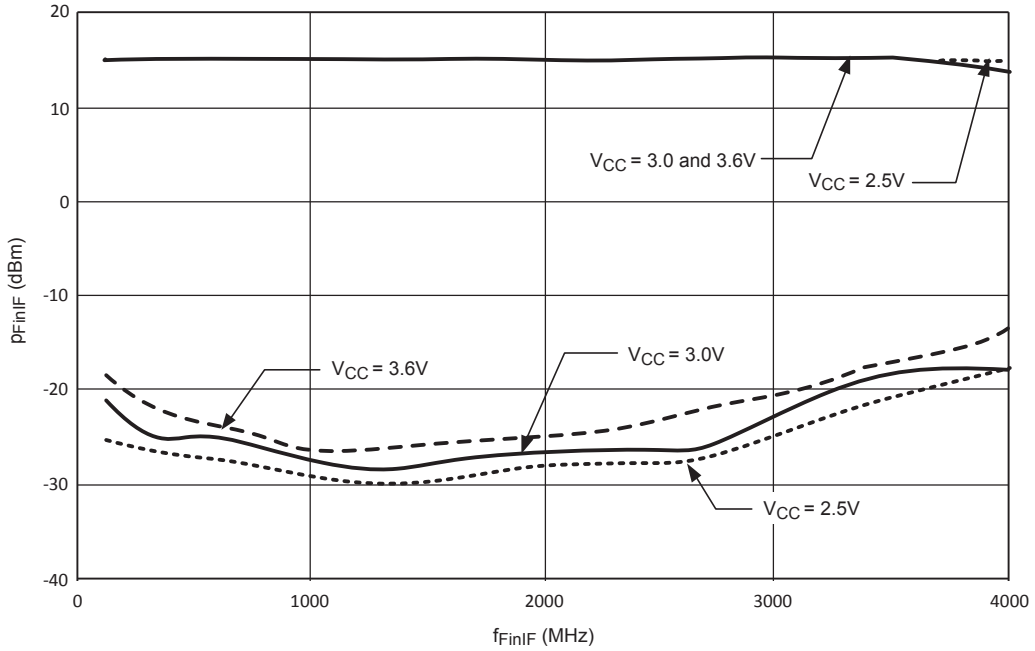

Figure 5.

IF PLL Fin Sensitivity
V_{CC} = 3.0 V, IF_P = 16

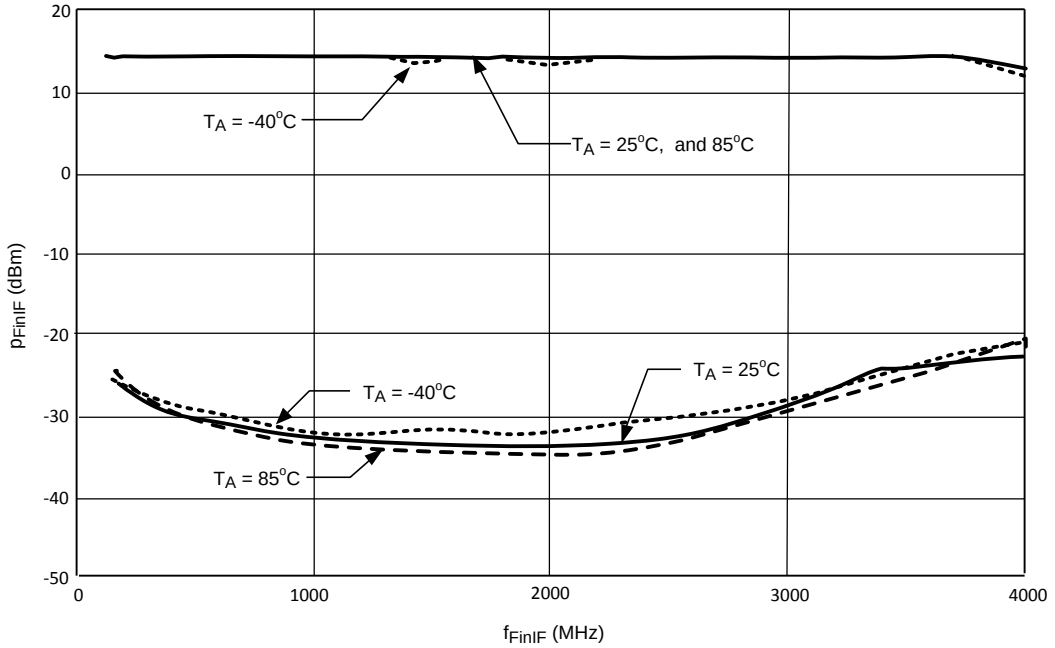

Figure 6.

Typical Performance Characterstics: Sensitivity (continued)

OSCin Sensitivity
T_A = 25°C, OSC_2X = 0

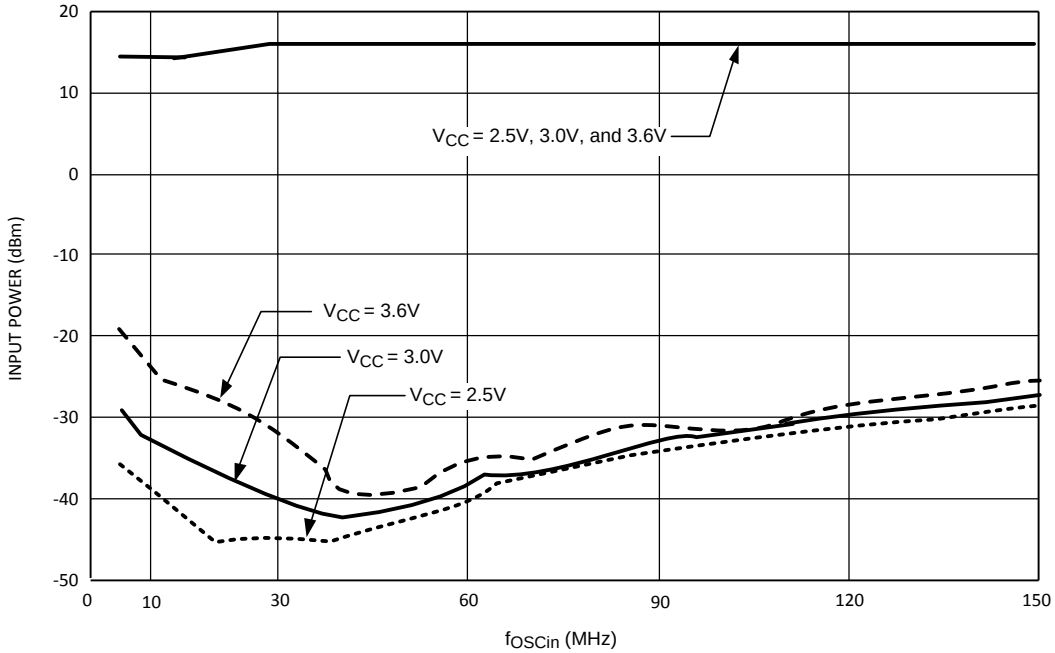

Figure 7.

OSCin Sensitivity
V_{CC} = 3.0 V, OSC_2X = 0

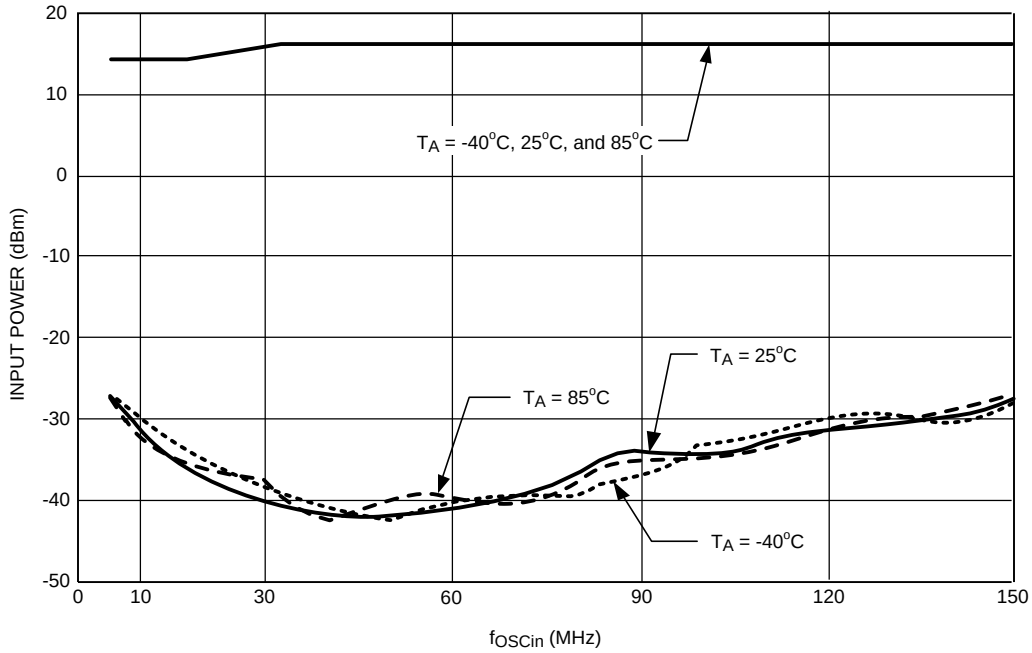

Figure 8.

Copyright © 2007–2013, Texas Instruments Incorporated

Typical Performance Characterstics: Sensitivity (continued)

OSCin Sensitivity
T_A = 25°C, OSC_2X =1

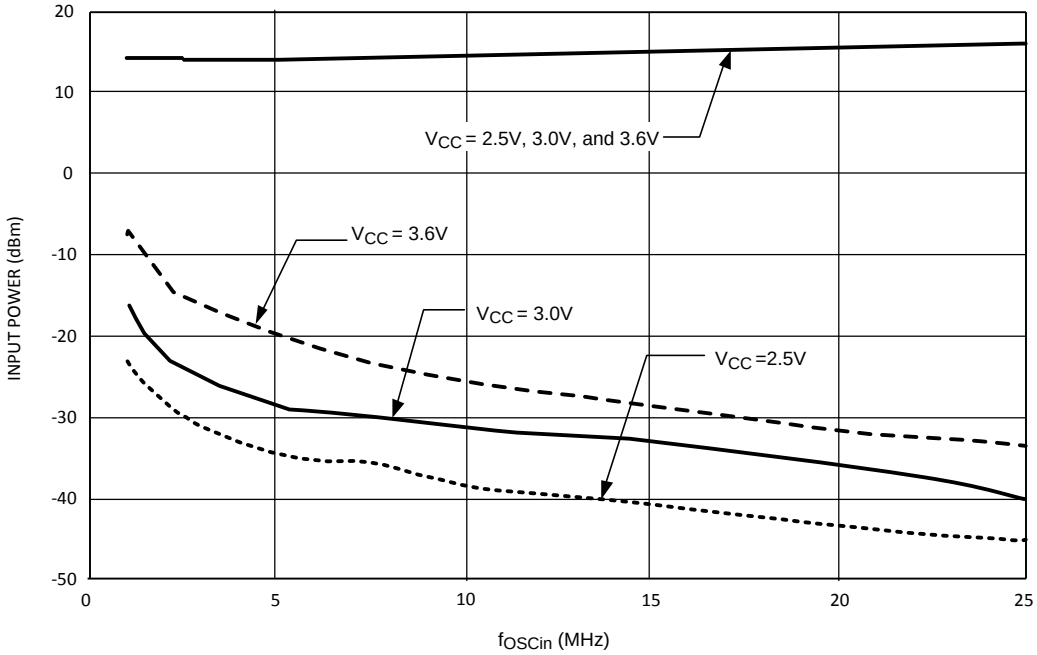

Figure 9.

OSCin Sensitivity
V_{CC} = 3.0 V, OSC_2X = 1

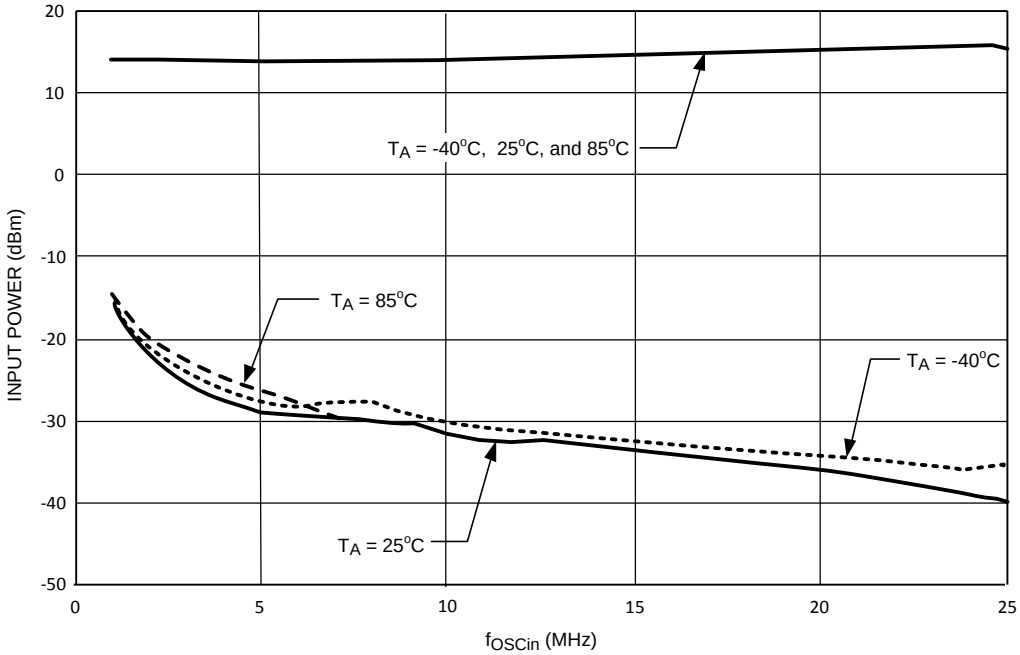

Figure 10.

Typical Performance Characteristic: FinRF Input Impedance

NOTE

Typical performance characteristics do not imply any sort of ensured specification. Ensured specifications are in Electrical Characteristics.

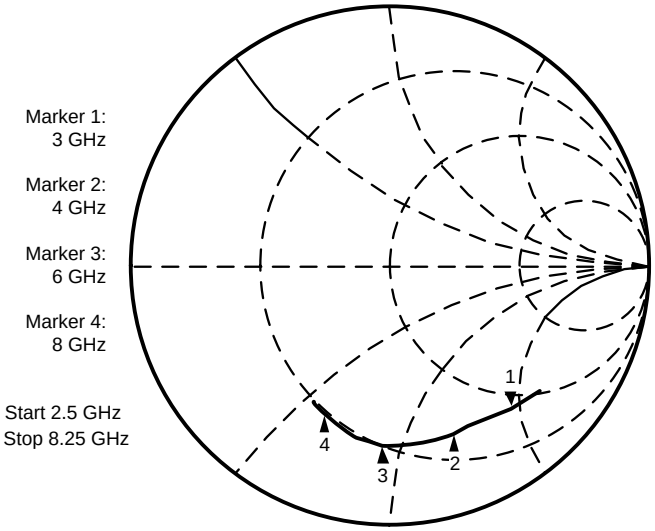

Figure 11.

FinRF Input Impedance		
Frequency (MHz)	**Real (Ohms)**	**Imaginary (Ohms)**
3000	39	-94
3200	37	-86
3400	33	-78
3600	30	-72
3800	28	-69
4000	26	-66
4250	24	-63
4500	23	-60
4750	22	-57
5000	20	-54
5250	19	-50
5500	18	-49
5750	17	-47
6000	17	-45
6250	16	-44
6500	16	-42
6750	16	-40
7000	16	-39
7250	16	-37
7500	16	-35
7750	17	-33
8000	17	-30
8250	16	-27

Copyright © 2007–2013, Texas Instruments Incorporated

Typical Performance Characteristic: FinIF Input Impedance

NOTE

Typical performance characteristics do not imply any sort of ensured specification. Ensured specifications are in Electrical Characteristics.

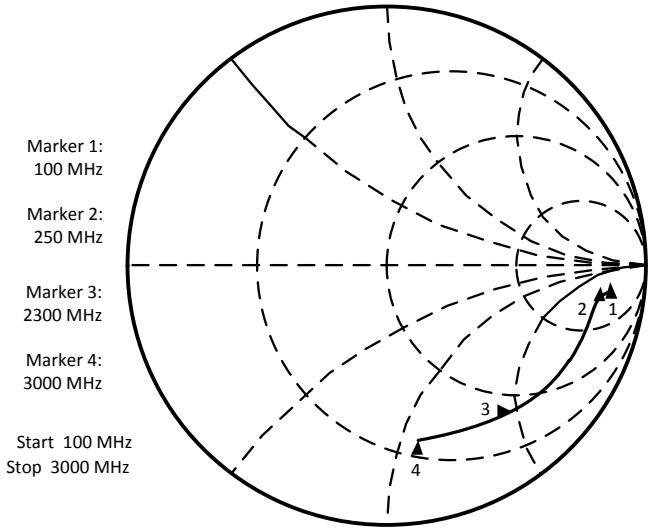

Figure 12.

FinIF Input Impedance		
Frequency (MHz)	**Real (Ohms)**	**Imaginary (Ohms)**
100	508	-233
150	456	-215
200	420	-206
250	403	-205
300	370	-207
400	344	-215
500	207	-223
600	274	-225
700	242	-225
800	242	-225
900	214	-222
1000	171	-208
1200	137	-191
1400	112	-176
1600	91	-158
1800	76	-139
2000	62	-122
2200	51	-105
2300	46	-96
2400	42	-88
2600	37	-74
2800	29	-63
3000	25	-54

Copyright © 2007–2013, Texas Instruments Incorporated

Typical Performance Characteristic: OSCin Input Impedance

NOTE

Typical performance characteristics do not imply any sort of ensured specification. Ensured specifications are in Electrical Characteristics.

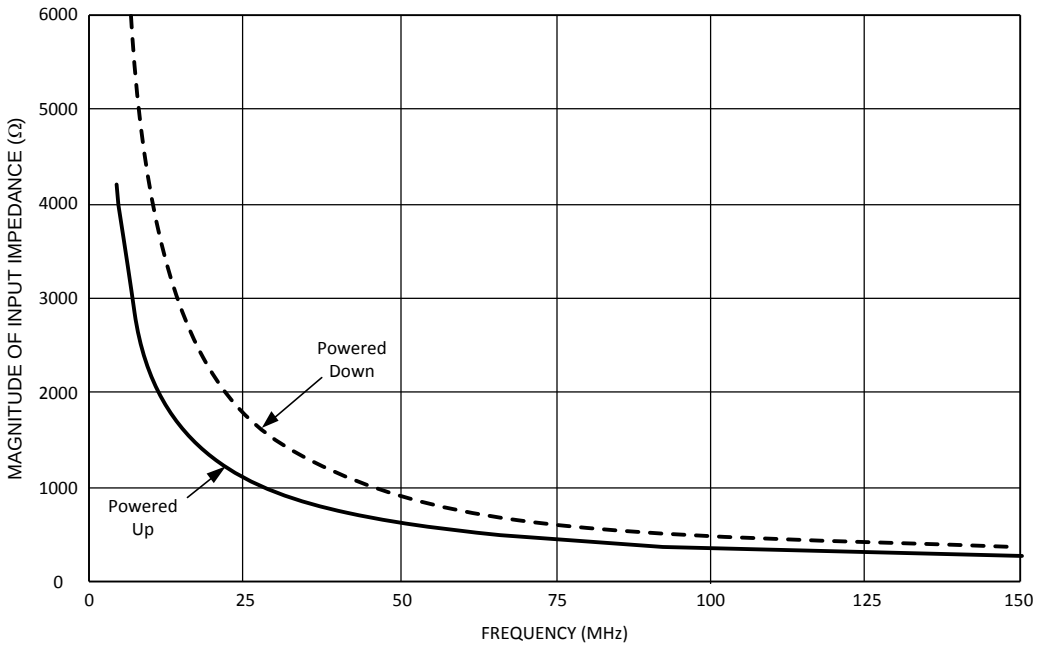

Figure 13.

Frequency (MHz)	Powered Up			Powered Down		
	Real	Imaginary	Magnitude	Real	Imaginary	Magnitude
5	1730	-3779	4157	392	-8137	8146
10	846	-2236	2391	155	-4487	4490
20	466	-1196	1284	107	-2215	2217
30	351	-863	932	166	-1495	-1504
40	316	-672	742	182	-1144	1158
50	278	-566	631	155	-912	925
60	261	-481	547	153	-758	774
70	252	-425	494	154	-652	669
80	239	-388	456	147	-576	595
90	234	-358	428	145	-518	538
100	230	-337	407	140	-471	492
110	225	-321	392	138	-436	458
120	219	-309	379	133	-402	123
130	214	-295	364	133	-374	397
140	208	-285	353	132	-349	373
150	207	-279	348	133	-329	355

Copyright © 2007–2013, Texas Instruments Incorporated

Typical Performance Characteristics: Currents

NOTE

Typical performance characteristics do not imply any sort of ensured specification. Ensured specifications are in Electrical Characteristics.

Power Supply Current
CE = High

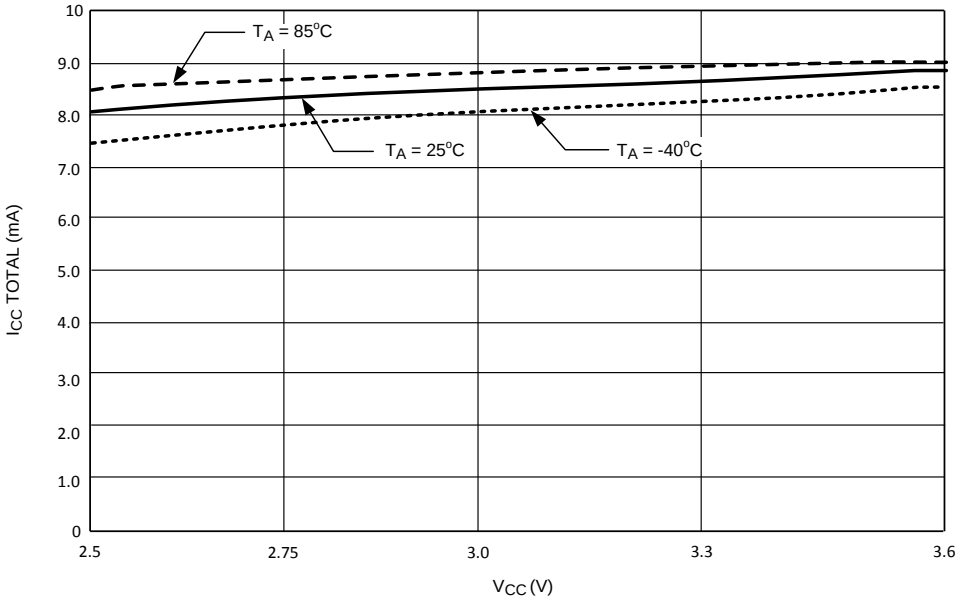

Figure 14.

RF PLL Charge Pump Current
V_{CC} = 3.0 Volts

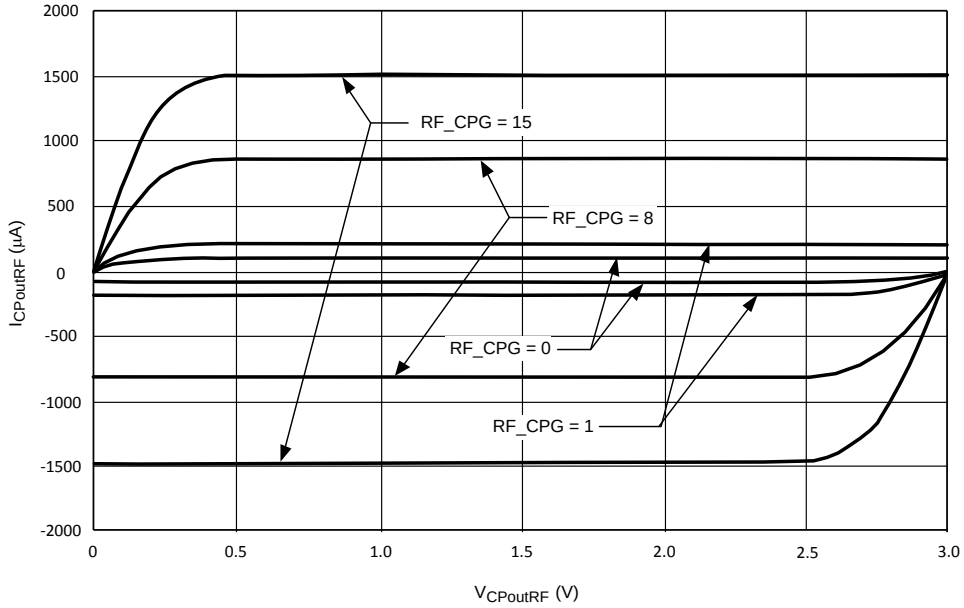

Figure 15.

Typical Performance Characteristics: Currents (continued)

IF PLL Charge Pump Current
V_{CC} = 3.0 Volts

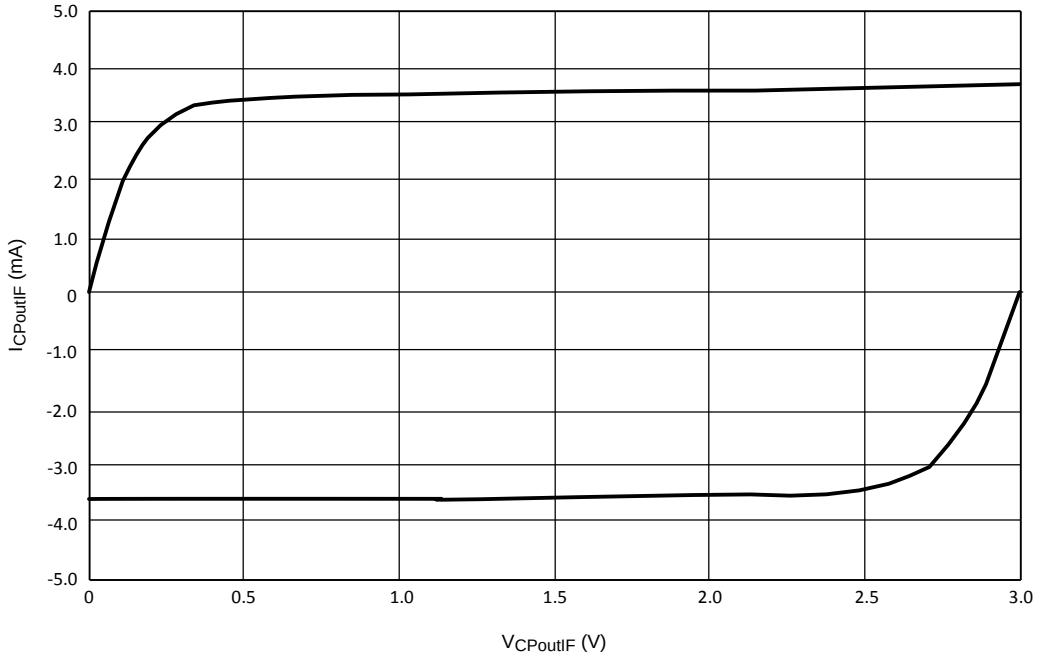

Figure 16.

Charge Pump Leakage
RF PLL
V_{CC} = 3.0 Volts

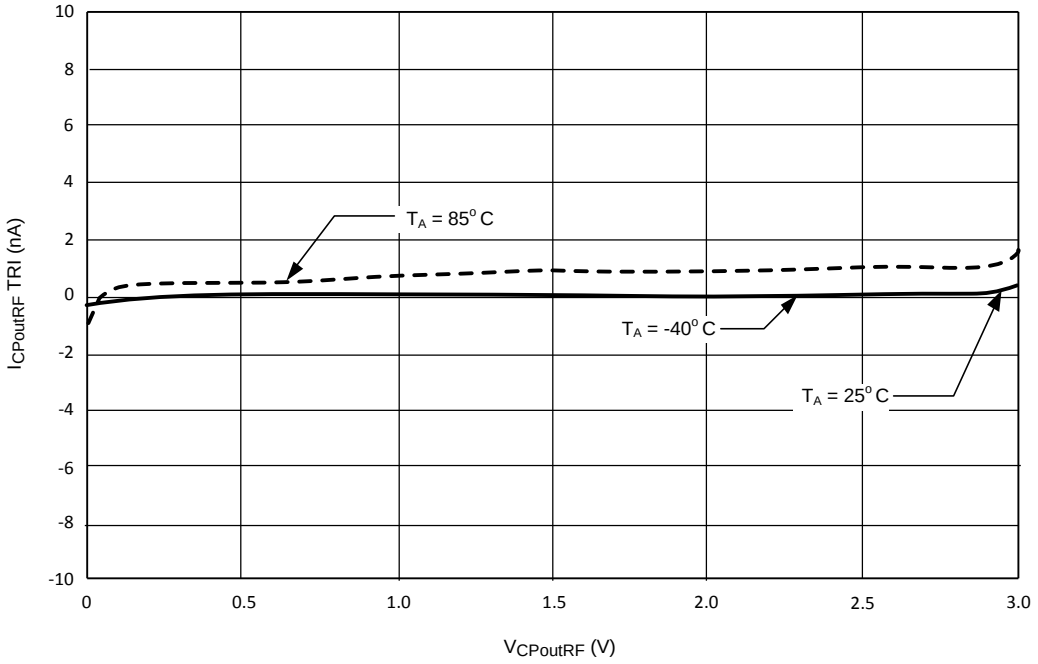

Figure 17.

Copyright © 2007–2013, Texas Instruments Incorporated

Typical Performance Characteristics: Currents (continued)

Charge Pump Leakage
IF PLL
V_{CC} = 3.0 Volts

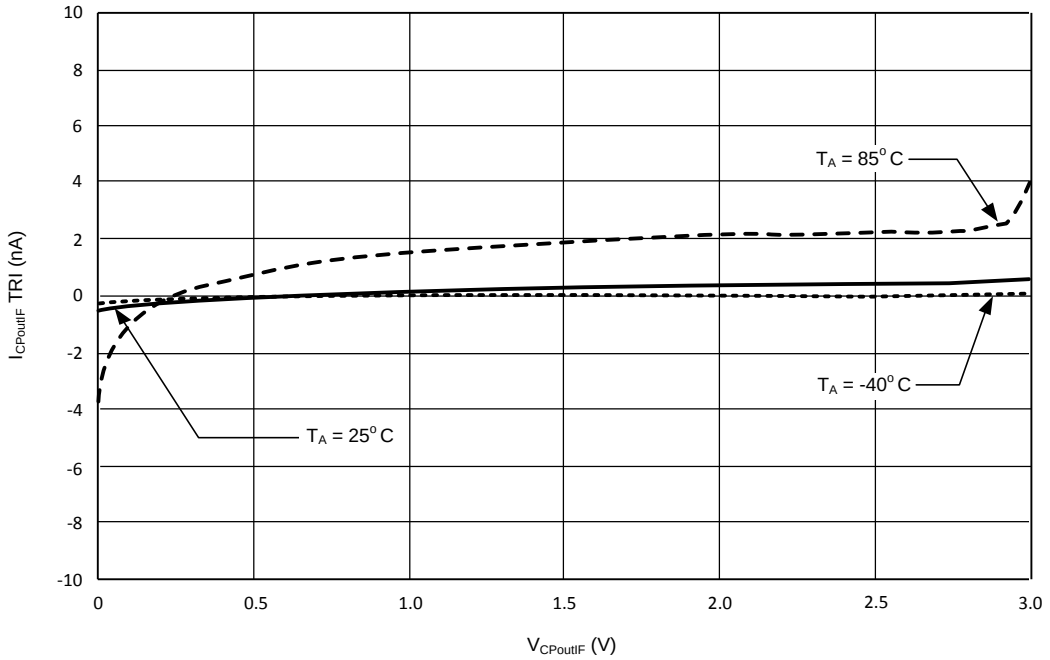

Figure 18.

BENCH TEST SETUPS

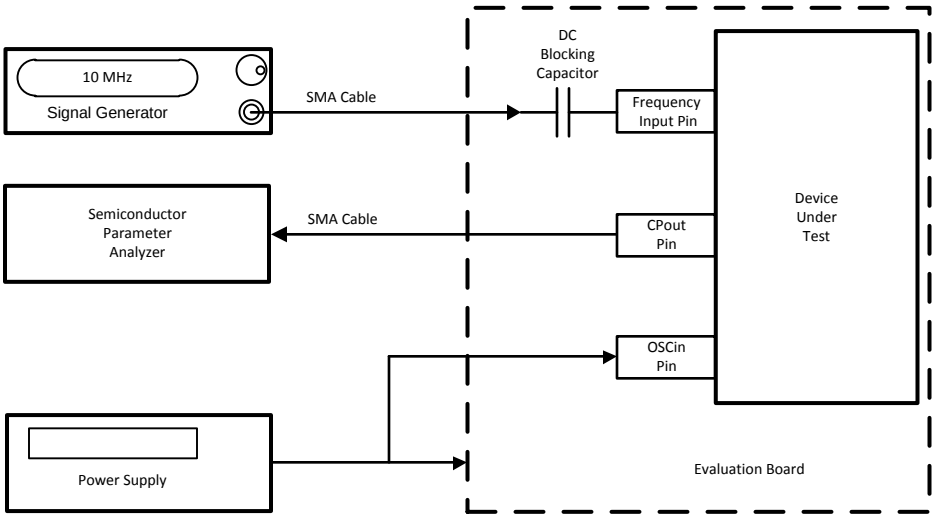

Figure 19. Block Diagram

Charge Pump Current Measurement Procedure

Figure 19 shows the test procedure for testing the RF and IF charge pumps. These tests include absolute current level, mismatch, and leakage measurement. In order to measure the charge pump currents, a signal is applied to the high frequency input pins. The reason for this is to ensure that the phase detector gets enough transitions in order to be able to change states. If no signal is applied, it is possible that the charge pump current reading will be low due to the fact that the duty cycle is not 100%. The OSCin Pin is tied to the supply. The charge pump currents can be measured by simply programming the phase detector to the necessary polarity. For instance, in order to measure the RF charge pump, a 10 MHz signal is applied to the FinRF pin. The source current can be measured by setting the RF PLL phase detector to a positive polarity, and the sink current can be measured by setting the phase detector to a negative polarity. The IF PLL currents can be measured in a similar way. Note that the magnitude of the RF PLL charge pump current is controlled by the RF_CPG bit. Once the charge pump currents are known, the mismatch can be calculated as well. In order to measure leakage, the charge pump is set to a TRI-STATE mode by enabling the RF_CPT and IF_CPT bits. The table below shows a summary of the various charge pump tests.

Current Test	RF_CPG	RF_CPP	RF_CPT	IF_CPP	IF_CPT
RF Source	0 to 15	0	0	X	X
RF Sink	0 to 15	1	0	X	X
RF TRI-STATE	X	X	1	X	X
IF Source	X	X	X	0	0
IF Sink	X	X	X	1	0
IF TRI-STATE	X	X	X	X	1

Copyright © 2007–2013, Texas Instruments Incorporated

Charge Pump Current Specification Definitions

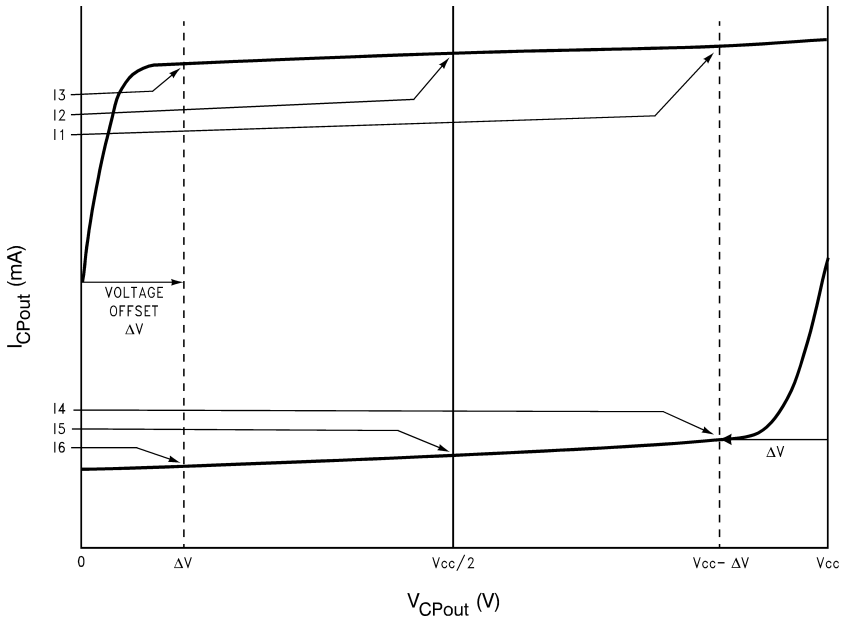

I1 = Charge Pump Sink Current at V_{CPout} = Vcc - ΔV

I2 = Charge Pump Sink Current at V_{CPout} = Vcc/2

I3 = Charge Pump Sink Current at V_{CPout} = ΔV

I4 = Charge Pump Source Current at V_{CPout} = Vcc - ΔV

I5 = Charge Pump Source Current at V_{CPout} = Vcc/2

I6 = Charge Pump Source Current at V_{CPout} = ΔV

ΔV = Voltage offset from the positive and negative supply rails. Defined to be 0.5 volts for this part.

v_{CPout} refers to either $V_{CPoutRF}$ or $V_{CPoutIF}$

I_{CPout} refers to either $I_{CPoutRF}$ or $I_{CPoutIF}$

Charge Pump Output Current Variation vs. Charge Pump Output Voltage

$$I_{CPout}\ \text{Vs}\ V_{CPout} = \frac{(|I1| - |I3|)}{(|I1| + |I3|)} \times 100\%$$

$$= \frac{(|I4| - |I6|)}{(|I4| + |I6|)} \times 100\%$$

Charge Pump Sink Current vs. Charge Pump Output Source Current Mismatch

$$I_{CPout}\ \text{Sink Vs}\ I_{CPout}\ \text{Source} = \frac{|I2| - |I5|}{\frac{1}{2}(|I2| + |I5|)} \times 100\%$$

Charge Pump Output Current Variation vs. Temperature

$$I_{CPout}\ \text{Vs}\ T_A = \frac{|I_2|\big|_{T_A} - |I_2|\big|_{T_A = 25°C}}{|I_2|\big|_{T_A = 25°C}} \times 100\%$$

$$= \frac{|I_5|\big|_{T_A} - |I_5|\big|_{T_A = 25°C}}{|I_5|\big|_{T_A = 25°C}} \times 100\%$$

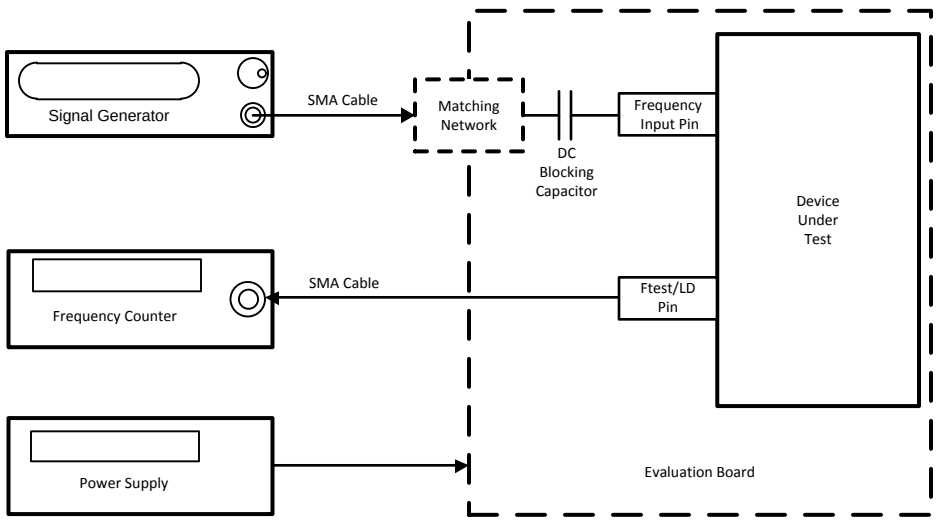

Frequency Input Pin	DC Blocking Capacitor	Corresponding Counter	Default Counter Value	MUX Value
OSCin	1000 pF	RF_R / 2	50	14
FinRF	100 pF// 1000 pF	RF_N / 2	502 + 2097150 / 4194301	15
FinIF	100 pF	IF_N / 2	534	13
OSCin	1000 pF	IF_R / 2	50	12

Sensitivity Measurement Procedure

Sensitivity is defined as the power level limits beyond which the output of the counter being tested is off by 1 Hz or more of its expected value. It is typically measured over frequency, voltage, and temperature. In order to test sensitivity, the MUX[3:0] word is programmed to the appropriate value. The counter value is then programmed to a fixed value and a frequency counter is set to monitor the frequency of this pin. The expected frequency at the Ftest/LD pin should be the signal generator frequency divided by twice the corresponding counter value. The factor of two comes in because the LMX2487E has a flip-flop which divides this frequency by two to make the duty cycle 50% in order to make it easier to read with the frequency counter. The frequency counter input

 Copyright © 2007–2013, Texas Instruments Incorporated

impedance should be set to high impedance. In order to perform the measurement, the temperature, frequency, and voltage is set to a fixed value and the power level of the signal is varied. Note that the power level at the part is assumed to be 4 dB less than the signal generator power level. This accounts for 1 dB for cable losses and 3 dB for the pad. The power level range where the frequency is correct at the Ftest/LD pin to within 1 Hz accuracy is recorded for the sensitivity limits. The temperature, frequency, and voltage can be varied in order to produce a family of sensitivity curves. Since this is an open-loop test, the charge pump is set to TRI-STATE and the unused side of the PLL (RF or IF) is powered down when not being tested. For this part, there are actually four frequency input pins, although there is only one frequency test pin (Ftest/LD). The conditions specific to each pin are shown in the table in the **Charge Pump Output Current Variation vs. Temperature** section.

Note that for the RF N counter, a fourth order fractional modulator is used in 22-bit mode with a fraction of 2097150 / 4194301 is used. The reason for this long fraction is to test the RF N counter and supporting fractional circuitry as completely as possible.

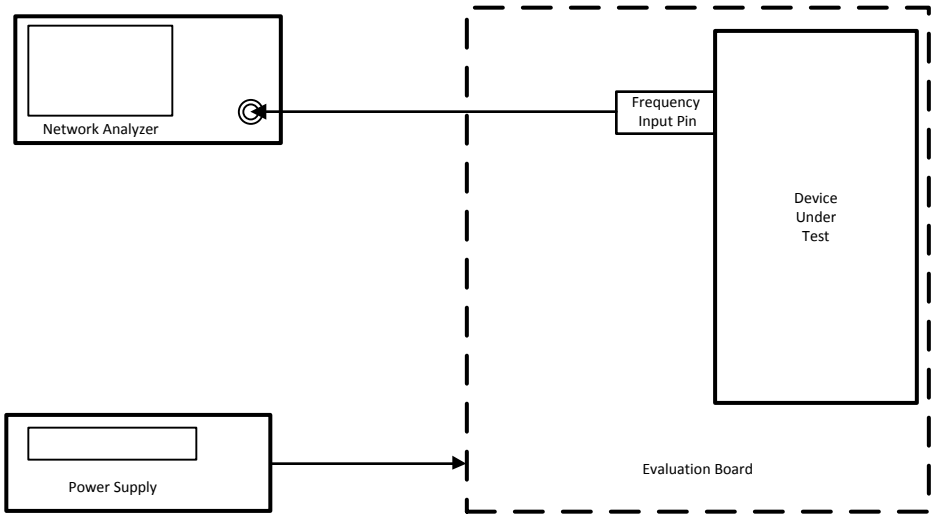

Figure 20. Block Diagram

Input Impedance Measurement Procedure

Figure 20 shows the test setup used for measuring the input impedance for the LMX2487E. The DC blocking capacitor used between the input SMA connector and the pin being measured must be changed to a zero Ohm resistor. This procedure applies to the FinRF, FinIF, and OSCin pins. The basic test procedure is to calibrate the network analyzer, ensure that the part is powered up, and then measure the input impedance. The network analyzer can be calibrated by using either calibration standards or by soldering resistors directly to the evaluation board. An open can be implemented by putting no resistor, a short can be implemented by soldering a zero ohm resistor as close as possible to the pin being measured, and a short can be implemented by soldering two 100-ohm resistors in parallel as close as possible to the pin being measured. Calibration is done with the PLL removed from the PCB. This requires the use of a clamp down fixture that may not always be generally available. If no clamp down fixture is available, then this procedure can be done by calibrating up to the point where the DC blocking capacitor usually is, and then implementing port extensions with the network analyzer. Zero ohm resistor is added back for the actual measurement. Once the setup is calibrated, it is necessary to ensure that the PLL is powered up. This can be done by toggling the power down bits (RF_PD and IF_PD) and observing that the current consumption indeed increases when the bit is disabled. Sometimes it may be necessary to apply a signal to the OSCin pin in order to program the part. If this is necessary, disconnect the signal once it is established that the part is powered up. It is useful to know the input impedance of the PLL for the purposes of debugging RF problems and designing matching networks. Another use of knowing this parameter is make the trace width on the PCB such that the input impedance of this trace matches the real part of the input impedance of the PLL frequency of operation. In general, it is good practice to keep trace lengths short and make designs that are relatively resistant to variations in the input impedance of the PLL.

Copyright © 2007–2013, Texas Instruments Incorporated

Functional Description

GENERAL

The LMX2487E consists of integrated N counters, R counters, and charge pumps. The TCXO, VCO and loop filter are supplied external to the chip. The various blocks are described below.

TCXO, OSCILLATOR BUFFER, AND R COUNTER

The oscillator buffer must be driven single-ended by a signal source, such as a TCXO. The OSCout pin is included to provide a buffered output of this input signal and is active when the OSC_OUT bit is set to one. The ENOSC pin can be also pulled high to ensure that the OSCout pin is active, regardless of the status of the registers in the LMX2487E.

The R counter divides this TCXO frequency down to the comparison frequency.

PHASE DETECTOR

The maximum phase detector operating frequency for the IF PLL is straightforward, but it is a little more involved for the RF PLL since it is fractional. The maximum phase detector frequency for the LMX2487E RF PLL is 50 MHz. However, this is not possible in all circumstances due to illegal divide ratios of the N counter. The crystal reference frequency also limits the phase detector frequency, although the doubler helps with this limitation. There are trade-offs in choosing the phase detector frequency. If this frequency is run higher, then phase noise will be lower, but lock time may be increased due to cycle slipping and the capacitors in the loop filter may become rather large.

CHARGE PUMP

For the majority of the time, the charge pump output is high impedance, and the only current through this pin is the Tri-State leakage. However, it does put out fast correction pulses that have a width that is proportional to the phase error presented at the phase detector.

The charge pump converts the phase error presented at the phase detector into a correction current. The magnitude of this current is theoretically constant, but the duty cycle is proportional to the phase error. For the IF PLL, this current is not programmable, but for the RF PLL it is programmable in 16 steps. Also, the RF PLL allows for a higher charge pump current to be used when the PLL is locking in order to reduce the lock time.

LOOP FILTER

The loop filter design can be rather involved. In addition to the regular constraints and design parameters, delta-sigma PLLs have the additional constraint that the order of the loop filter should be one greater than the order of the delta sigma modulator. This rule of thumb comes from the requirement that the loop filter must roll off the delta sigma noise at 20 dB/decade faster than it rises. However, since the noise can not have infinite power, it must eventually roll off. If the loop bandwidth is narrow, this requirement may not be necessary. For the purposes of discussion in this datasheet, the pole of the loop filter at 0 Hz is not counted. So a second order filter has 3 components, a 3rd order loop filter has 5 components, and the 4th order loop filter has 7 components. Although a 5th order loop filter is theoretically necessary for use with a 4th order modulator, typically a 4th order filter is used in this case. The loop filter design, especially for higher orders can be rather involved, but there are many simulation tools and references available, such as the one given at the end of the functional description block.

Copyright © 2007–2013, Texas Instruments Incorporated

N COUNTERS AND HIGH FREQUENCY INPUT PINS

The N counter divides the VCO frequency down to the comparison frequency. Because prescalers are used, there are limitations on how small the N value can be. The N counters are discussed in greater depth in Programming Description. Since the input pins to these counters (FinRF and FinIF) are high frequency, layout considerations are important.

High Frequency Input Pins, FinRF and FinIF

It is generally recommended that the VCO output go through a resistive pad and then through a DC blocking capacitor before it gets to these high frequency input pins. If the trace length is sufficiently short (< 1/10th of a wavelength), then the pad may not be necessary, but a series resistor of about 39 ohms is still recommended to isolate the PLL from the VCO. The DC blocking capacitor should be chosen at least to be 27 pF. It may turn out that the frequency is above the self-resonant frequency of the capacitor, but since the input impedance of the PLL tends to be capacitive, it actually is a benefit to exceed the tune frequency. The pad and the DC blocking capacitor should be placed as close to the PLL as possible

Complementary High Frequency Pin, FinRF*

These inputs may be used to drive the PLL differentially, but it is very common to drive the PLL in a single ended fashion. A shunt capacitor should be placed at the FinRF* pin. The value of this capacitor should be chosen such that the impedance, including the ESR of the capacitor, is as close to an AC short as possible at the operating frequency of the PLL. 100 pF is a typical value.

POWER PINS, POWER DOWN, AND POWER UP MODES

It is recommended that all of the power pins be filtered with a series 18 ohm resistor and then placing two capacitors shunt to ground, thus creating a low pass filter. Although it makes sense to use large capacitor values in theory, the ESR (Equivalent Series Resistance) is greater for larger capacitors. For optimal filtering minimize the sum of the ESR and theoretical impedance of the capacitor. It is therefore recommended to provide two capacitors of very different sizes for the best filtering. 1 µF and 100 pF are typical values. The small capacitor should be placed as close as possible to the pin.

The power down state of the LMX2487E is controlled by many factors. The one factor that overrides all other factors is the CE pin. If this pin is low, the part will be powered down. Asserting a high logic level on this pin is necessary to power up the chip, however, there are other bits in the programming registers that can override this and put the PLL back in a power down state. Provided that the voltage on the CE pin is high, programming the RF_PD and IF_PD bits to zero ensures that the part will be powered up. Programming either one of these bits to one will power down the appropriate section of the synthesizer, provided that the ATPU bit does not override this.

CE Pin	RF_PD	ATPU Bit Enabled + Write to RF N Counter	PLL State
Low	X	X	Powered Down (Asynchronous)
High	X	Yes	Powered Up
High	0	No	Powered Up
High	1	No	Powered Down (Asynchronous)

DIGITAL LOCK DETECT OPERATION

The RF PLL digital lock detect circuitry compares the difference between the phase of the inputs of the phase detector to a RC generated delay of ε. To indicate a locked state (Lock = HIGH) the phase error must be less than the ε RC delay for 5 consecutive reference cycles. Once in lock (Lock = HIGH), the RC delay is changed to approximately δ. To indicate an out of lock state (Lock = LOW), the phase error must become greater δ. The values of ε and δ are dependent on which PLL is used and are shown in the table below:

PLL	ε	δ
RF	10 ns	20 ns
IF	15 ns	30 ns

When the PLL is in the power down mode and the Ftest/LD pin is programmed for the lock detect function, it is forced LOW. The accuracy of this circuit degrades at higher comparison frequencies. To compensate for this, the DIV4 word should be set to one if the comparison frequency exceeds 20 MHz. The function of this word is to divide the comparison frequency presented to the lock detect circuit by 4. Note that if the MUX[3:0] word is set such as to view lock detect for both PLLs, an unlocked (LOW) condition is shown whenever either one of the PLLs is determined to be out of lock.

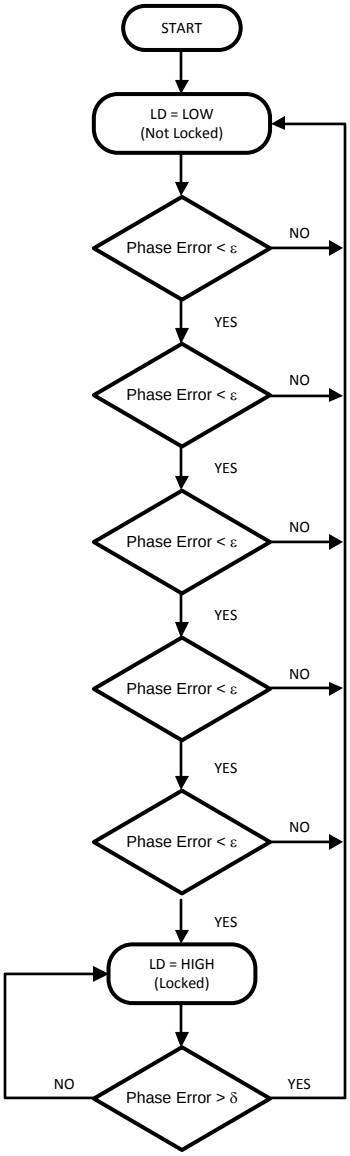

Copyright © 2007–2013, Texas Instruments Incorporated

CYCLE SLIP REDUCTION AND FASTLOCK

The LMX2487E offers both cycle slip reduction (CSR) and Fastlock with timeout counter support. This means that it requires no additional programming overhead to use them. It is generally recommended that the charge pump current in the steady state be 8X or less in order to use cycle slip reduction, and 4X or less in steady state in order to use Fastlock. The next step is to decide between using Fastlock or CSR. This determination can be made based on the ratio of the comparison frequency (f_{COMP}) to loop bandwidth (BW).

Comparison Frequency (f_{COMP})	Fastlock	Cycle Slip Reduction (CSR)
$f_{COMP} \leq 1.25$ MHz	Noticeable better than CSR	Likely to provide a benefit, provided that $f_{COMP} > 100$ X BW
1.25 MHz < $f_{COMP} \leq 2$ MHz	Marginally better than CSR	
$f_{COMP} > 2$ MHz	Same or worse than CSR	

Cycle Slip Reduction (CSR)

Cycle slip reduction works by reducing the comparison frequency during frequency acquisition while keeping the same loop bandwidth, thereby reducing the ratio of the comparison frequency to the loop bandwidth. In cases where the ratio of the comparison frequency exceeds about 100 times the loop bandwidth, cycle slipping can occur and significantly degrade lock times. The greater this ratio, the greater the benefit of CSR. This is typically the case of high comparison frequencies. In circumstances where there is not a problem with cycle slipping, CSR provides no benefit. There is a glitch when CSR is disengaged, but since CSR should be disengaged long before the PLL is actually in lock, this glitch is not an issue. A good rule of thumb for CSR disengagement is to do this at the peak time of the transient response. Because this time is typically much sooner than Fastlock should be disengaged, it does not make sense to use CSR and Fastlock in combination.

Fastlock

Fastlock works by increasing the loop bandwidth only during frequency acquisition. In circumstances where the comparison frequency is less than or equal to 2 MHz, Fastlock may provide a benefit beyond what CSR can offer. Since Fastlock also reduces the ratio of the comparison frequency to the loop bandwidth, it may provide a significant benefit in cases where the comparison frequency is above 2 MHz. However, CSR can usually provide an equal or larger benefit in these cases, and can be implemented without using an additional resistor. The reason for this restriction on frequency is that Fastlock has a glitch when it is disengaged. As the time of engagement for Fastlock decreases and becomes on the order of the fast lock time, this glitch grows and limits the benefits of Fastlock. This effect becomes worse at higher comparison frequencies. There is always the option of reducing the comparison frequency at the expense of phase noise in order to satisfy this constraint on comparison frequency. Despite this glitch, there is still a net improvement in lock time using Fastlock in these circumstances. When using Fastlock, it is also recommended that the steady state charge pump state be 4X or less. Also, Fastlock was originally intended only for second order filters, so when implementing it with higher order filters, the third and fourth poles can not be too close in, or it will not be possible to keep the loop filter well optimized when the higher charge pump current and Fastlock resistor are engaged.

Using Cycle Slip Reduction (CSR) to Avoid Cycle Slipping

Once it is decided that CSR is to be used, the cycle slip reduction factor needs to be chosen. The available factors are 1/2, 1/4, and 1/16. In order to preserve the same loop characteristics, it is recommended that the following constraint be satisfied:

$$\text{(Fastlock Charge Pump Current) / (Steady State Charge Pump Current) = CSR}$$

In order to satisfy this constraint, the maximum charge pump current in steady state is 8X for a CSR of 1/2, 4X for a CSR of 1/4, and 1X for a CSR of 1/16. Because the PLL phase noise is better for higher charge pump currents, it makes sense to choose CSR only as large as necessary to prevent cycle slipping. Choosing it larger than this will not improve lock time, and will result in worse phase noise.

Copyright © 2007–2013, Texas Instruments Incorporated

Consider an example where the desired loop bandwidth in steady state is 100 kHz and the comparison frequency is 20 MHz. This yields a ratio of 200. Cycle slipping may be present, but would not be too severe if it was there. If a CSR factor of 1/2 is used, this would reduce the ratio to 100 during frequency acquisition, which is probably sufficient. A charge pump current of 8X could be used in steady state, and a factor of 16X could be used during frequency acquisition. This yields a ratio of 1/2, which is equal to the CSR factor and this satisfies the above constraint. In this circumstance, it could also be decided to just use 16X charge pump current all the time, since it would probably have better phase noise, and the degradation in lock time would not be too severe.

Using Fastlock to Improve Lock Times

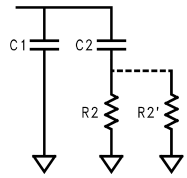

Once it is decided that Fastlock is to be used, the loop bandwidth multiplier, K, is needed in order to determine the theoretical impact of Fastlock on the loop bandwidth and the resistor value, R2p, that is switched in parallel during Fastlock. This ratio is calculated as follows:

K = (Fastlock Charge Pump Current) / (Steady State Charge Pump Current)

K	Loop Bandwidth	R2p Value	Lock Time
1	1.00 X	Open	100 %
2	1.41 X	R2/0.41	71 %
3	1.73 X	R2/0.73	58%
4	2.00 X	R2	50%
8	2.83 X	R2/1.83	35%
9	3.00 X	R2/2	33%
16	4.00 X	R2/3	25%

The above table shows how to calculate the fastlock resistor and theoretical lock time improvement, once the ratio, K, is known. This all assumes a second order filter (not counting the pole at 0 Hz). However, it is generally recommended that the loop filter order be one greater than the order of the delta sigma modulator, which means that a second order filter is never recommended. In this case, the value for R2p is typically about 80% of what it would be for a second order filter. Because the fastlock disengagement glitch gets larger and it is harder to keep the loop filter optimized as the K value becomes larger, designing for the largest possible value for K usually, but not always yields the best improvement in lock time. To get a more accurate estimate requires more simulation tools, or trial and error.

Capacitor Dielectric Considerations for Lock Time

The LMX2487E has a high fractional modulus and high charge pump gain for the lowest possible phase noise. One consideration is that the reduced N value and higher charge pump may cause the capacitors in the loop filter to become larger in value. For larger capacitor values, it is common to have a trade-off between capacitor dielectric quality and physical size. Using film capacitors or NPO/COG capacitors yields the best possible lock times, where as using X7R or Z5R capacitors can increase lock time by 0 – 500%. However, it is a general tendency that designs that use a higher compare frequency tend to be less sensitive to the effects of capacitor dielectrics. Although the use of lesser quality dielectric capacitors may be unavoidable in many circumstances, allowing a larger footprint for the loop filter capacitors, using a lower charge pump current, and reducing the fractional modulus are all ways to reduce capacitor values. Capacitor dielectrics have very little impact on phase noise and spurs.

Copyright © 2007–2013, Texas Instruments Incorporated

FRACTIONAL SPUR AND PHASE NOISE CONTROLS

Control of the fractional spurs is more of an art than an exact science. The first differentiation that needs to be made is between primary fractional and sub-fractional spurs. The primary fractional spurs are those that occur at increments of the channel spacing only. The sub-fractional spurs are those that occur at a smaller resolution than the channel spacing, usually one-half or one-fourth. There are trade-offs between fractional spurs, sub-fractional spurs, and phase noise. The rules of thumb presented in this section are just that. There will be exceptions. The bits that impact the fractional spurs are FM and DITH, and these bits should be set in this order.

The first step to do is choose FM, for the delta sigma modulator order. It is recommended to start with FM = 3 for a third order modulator and use strong dithering. In general, there is a trade-off between primary and sub-fractional spurs. Choosing the highest order modulator (FM = 0 for 4th order) typically provides the best primary fractional spurs, but the worst sub-fractional spurs. Choosing the lowest modulator order (FM = 2 for 2nd order), typically gives the worst primary fractional spurs, but the best sub-fractional spurs. Choosing FM = 3, for a 3rd order modulator is a compromise.

The second step is to choose DITH, for dithering. Dithering has a very small impact on primary fractional spurs, but a much larger impact on sub-fractional spurs. The only problem is that it can add a few dB of phase noise, or even more if the loop bandwidth is very wide. Disabling dithering (DITH = 0), provides the best phase noise, but the sub-fractional spurs are worst (except when the fractional numerator is 0, and in this case, they are the best). Choosing strong dithering (DITH = 2) significantly reduces sub-fractional spurs, if not eliminating them completely, but adds the most phase noise. Weak dithering (DITH = 1) is a compromise.

The third step is to tinker with the fractional word. Although 1/10 and 400/4000 are mathematically the same, expressing fractions with much larger fractional numerators often improve the fractional spurs. Increasing the fractional denominator only improves spurs to a point. A good practical limit could be to keep the fractional denominator as large as possible, but not to exceed 4095, so it is not necessary to use the extended fractional numerator or denominator.

NOTE

For more information concerning delta-sigma PLLs, loop filter design, cycle slip reduction, Fastlock, and many other topics, visit http://www.ti.com. Here there is the EasyPLL simulation tool and an online reference called "PLL Performance, Simulation, and Design", by Dean Banerjee.

Programming Description

GENERAL PROGRAMMING INFORMATION

The 24-bit data registers are loaded through a MICROWIRE Interface. These data registers are used to program the R counter, the N counter, and the internal mode control latches. The data format of a typical 24-bit data register is shown below. The control bits CTL [3:0] decode the register address. On the rising edge of LE, data stored in the shift register is loaded into one of the appropriate latches (selected by address bits). Data is shifted in MSB first. Note that it is best to program the N counter last, since doing so initializes the digital lock detector and Fastlock circuitry. Note that initialize means it resets the counters, but it does NOT program values into these registers. The exception is when 22-bit is not being used. In this case, it is not necessary to program the R7 register.

MSB					**LSB**
DATA [21:0]		CTL [3:0]			
23	4	3	2	1	0

Register Location Truth Table

The control bits CTL [3:0] decode the internal register address. The table below shows how the control bits are mapped to the target control register.

C3	C2	C1	C0	DATA Location
x	x	x	0	R0
0	0	1	1	R1
0	1	0	1	R2
0	1	1	1	R3
1	0	0	1	R4
1	0	1	1	R5
1	1	0	1	R6
1	1	1	1	R7

Control Register Content Map

Because the LMX2487E registers are complicated, they are organized into two groups, basic and advanced. The first four registers are basic registers that contain critical information necessary for the PLL to achieve lock. The last 5 registers are for features that optimize spur, phase noise, and lock time performance. The next page shows these registers.

Copyright © 2007–2013, Texas Instruments Incorporated

Quick Start Register Map

Although it is highly recommended that the user eventually take advantage of all the modes of the LMX2487E, the quick start register map is shown in order for the user to get the part up and running quickly using only those bits critical for basic functionality. The following default conditions for this programming state are a third order delta-sigma modulator in 12-bit mode with no dithering and no Fastlock.

REG	23	22	21	20	19	18	17	16	15	14	13	12	11	10	9	8	7	6	5	4	3	2	1	0
	DATA[19:0] (Except for the RF_N Register, which is [22:0])																				C3	C2	C1	C0
R0	RF_N[10:0]											RF_FN[11:0]												0
R1	RF_PD	RF_P	RF_R[5:0]						RF_FD[11:0]												0	0	1	1
R2	IF_PD	IF_N[18:0]																			0	1	0	1
R3	0001				RF_CPG[3:0]				IF_R[11:0]												0	1	1	1
R4	0	0	1	0	0	0	0	0	1	1	0	0	0	1	1	1	0	0	0	0	1	0	0	1

Copyright © 2007–2013, Texas Instruments Incorporated

Complete Register Map

The complete register map shows all the functionality of all registers, including the last five.

REG	23	22	21	20	19	18	17	16	15	14	13	12	11	10	9	8	7	6	5	4	3	2	1	0
	DATA[19:0] (Except for the RF_N Register, which is [22:0])																				C3	C2	C1	C0
R0	RF_N[10:0]											RF_FN[11:0]												0
R1	RF_PD	RF_P	RF_R[5:0]						RF_FD[11:0]												0	0	1	1
R2	IF_PD	IF_N[18:0]																			0	1	0	1
R3	ACCESS[3:0]				RF_CPG[3:0]				IF_R[11:0]												0	1	1	1
R4	ATPU	0	1	0	0	0	DITH [1:0]		FM [1:0]		0	OSC_ 2X	OSC_ OUT	IF_ CPP	RF_ CPP	IF_P	MUX [3:0]				1	0	0	1
R5	RF_FD[21:12]										RF_FN[21:12]										1	0	1	1
R6	CSR[1:0]		RF_CPF[3:0]				RF_TOC[13:0]														1	1	0	1
R7	0	0	0	0	0	0	0	0	0	0	DIV4	0	1	0	0	1	IF_ RST	RF_ RST	IF_ CPT	RF_ CPT	1	1	1	1

Copyright © 2007–2013, Texas Instruments Incorporated

R0 REGISTER

Note that this register has only one control bit, so the N counter value to be changed with a single write statement to the PLL.

REGISTER	23	22	21	20	19	18	17	16	15	14	13	12	11	10	9	8	7	6	5	4	3	2	1	0
	DATA[22:0]																							C0
R0	RF_N[10:0]											RF_FN[11:0]												0

RF_FN[11:0] – Fractional Numerator for RF PLL

Refer to Fractional Numerator Determination { RF_FN[21:12], RF_FN[11:0], ACCESS[1] } for a more detailed description of this control word.

RF_N[10:0] – RF N Counter Value

The RF N counter contains an 16/17/20/21 and a 32/33/36/37 prescaler. The N counter value can be calculated as follows:

$$N = RF_P \cdot RF_C + 4 \cdot RF_B + RF_A$$

RF_C ≥Max{RF_A, RF_B} , for $N-2^{FM}-1$ ... $N+2^{FM}$ is a necessary condition. This rule is slightly modified in the case where the RF_B counter has an unused bit, where this extra bit is used by the delta-sigma modulator for the purposes of modulation. Consult Table 1 and Table 2 for valid operating ranges for each prescaler.

Table 1. Operation with the 16/17/20/21 Prescaler (RF_P=0)

RF_N	RF_N [10:0]										
	RF_C [5:0]						RF_B [2:0]			RF_A [1:0]	
<49	N Values Below 49 are Illegal.										
49-63	Legal Divide Ratios are: 2nd Order Modulator: 49-61 3rd Order Modulator: 51-59 4th Order Modulator: 55										
64-79	Legal Divide Ratios are: 2nd and 3rd Order Modulator: All 4th Order Modulator: 64-75										
80	0	0	0	1	0	1	0	0	0	0	0
...	.	.	.	.	.	.	0	.	.	.	.
1023	1	1	1	1	1	1	0	1	1	1	1
>1023	N values above 1023 are prohibited.										

Table 2. Operation with the 32/33/36/37 Prescaler (RF_P=1)

RF_N	RF_N [10:0]										
	RF_C [5:0]						RF_B [2:0]			RF_A [1:0]	
<97	N Values Below 97 are Illegal.										
97-226	Legal Divide Ratios are: 2nd Order Modulator: 97-109, 129-145, 161-181, 193-217, 225-226 3rd Order Modulator: 99-107, 131-143, 163-179, 195-215 4th Order Modulator: 103, 135-139, 167-175, 199-211										
227–230	Legal Divide Ratios are: 2nd and 3rd Order Modulator: All 4th Order Modulator: None										
231	0	0	0	1	1	1	0	0	1	1	1
...	.	.	.	.	.	.	.	.	.	.	.
2039	1	1	1	1	1	1	1	0	1	1	1
2040-2043	Possible with a second or third order delta-sigma engine.										
2044-2045	Possible only with a second order delta-sigma engine.										
>2045	N values greater than 2045 are prohibited.										

Copyright © 2007–2013, Texas Instruments Incorporated

R1 REGISTER

REG	23	22	21	20	19	18	17	16	15	14	13	12	11	10	9	8	7	6	5	4	3	2	1	0
	DATA[19:0]																				C3	C2	C1	C0
R1	RF_ PD	RF_P	RF_R[5:0]						RF_FD[11:0]												0	0	1	1

RF_FD[11:0] – RF PLL Fractional Denominator

The function of these bits are described in Fractional Denominator Determination { RF_FD[21:12], RF_FD[11:0], ACCESS[1]}.

RF_R [5:0] – RF R Divider Value

The RF R Counter value is determined by this control word. Note that this counter does allow values down to one.

R Value	RF_R[5:0]					
1	0	0	0	0	0	1
...	.	.	.	.	.	.
63	1	1	1	1	1	1

RF_P – RF Prescaler bit

The prescaler used is determined by this bit.

RF_P	Prescaler	Maximum Frequency
0	16/17/20/21	4000 MHz
1	32/33/36/37	6000 MHz

RF_PD – RF Power Down Control Bit

When this bit is set to 0, the RF PLL operates normally. When it is set to one, the RF PLL is powered down and the RF Charge pump is set to a TRI-STATE mode. The CE pin and ATPU bit also control power down functions, and will override the RF_PD bit. The order of precedence is as follows. First, if the CE pin is LOW, then the PLL will be powered down. Provided this is not the case, the PLL will be powered up if the ATPU bit says to do so, regardless of the state of the RF_PD bit. After the CE pin and the ATPU bit are considered, then the RF_PD bit then takes control of the power down function for the RF PLL.

Copyright © 2007–2013, Texas Instruments Incorporated

R2 REGISTER

REG	23	22	21	20	19	18	17	16	15	14	13	12	11	10	9	8	7	6	5	4	3	2	1	0
	DATA[19:0]																				C3	C2	C1	C0
R2	IF_ PD	IF_N[18:0]																			0	1	0	1

IF_N[18:0] – IF N Divider Value

Table 3. IF_N Counter Programming with the 8/9 Prescaler (IF_P=0)

N Value	IF_N[18:0]																		
	IF_B															IF_A			
≤23	N values less than or equal to 23 are prohibited because IF_B ≥ 3 is required.																		
24-55	Legal divide ratios in this range are: 24-27, 32-36, 40-45, 48-54																		
56	0	0	0	0	0	0	0	0	0	0	0	0	1	1	1	0	0	0	0
57	0	0	0	0	0	0	0	0	0	0	0	0	1	1	1	0	0	0	1
...	.	.	.	.	.	.	.	.	.	.	.	.	.	.	.	.	.	.	.
262143	1	1	1	1	1	1	1	1	1	1	1	1	1	1	1	0	1	1	1

Table 4. Operation with the 16/17 Prescaler (IF_P=1)

N Value	IF_B															IF_A			
≤47	N values less than or equal to 47 are prohibited because IF_B ≥ 3 is required.																		
48-239	Legal divide ratios in this range are: 48-51, 64-68, 80-85, 96-102, 112-119, 128-136, 144-153, 160-170, 176-187, 192-204, 208-221, 224-238																		
240	0	0	0	0	0	0	0	0	0	0	0	1	1	1	1	0	0	0	0
241	0	0	0	0	0	0	0	0	0	0	0	1	1	1	1	0	0	0	1
...	.	.	.	.	.	.	.	.	.	.	.	.	.	.	.	.	.	.	.
524287	1	1	1	1	1	1	1	1	1	1	1	1	1	1	1	1	1	1	1

IF_PD – IF Power Down Bit

When this bit is set to 0, the IF PLL operates normally. When it is set to 1, the IF PLL powers down and the output of the IF PLL charge pump is set to a TRI-STATE mode. If the ATPU bit is set and register R0 is written to, the IF_PD will be reset to 0 and the IF PLL will be powered up. If the CE pin is held low, the IF PLL will be powered down, overriding the IF_PD bit.

Copyright © 2007–2013, Texas Instruments Incorporated

R3 REGISTER

REG	23	22	21	20	19	18	17	16	15	14	13	12	11	10	9	8	7	6	5	4	3	2	1	0
	DATA[19:0]																				C3	C2	C1	C0
R3	ACCESS[3:0]				RF_CPG[3:0]				IF_R[11:0]												0	1	1	1

IF_R[11:0] – IF R Divider Value

For the IF R divider, the R value is determined by the IF_R[11:0] bits in the R3 register. The minimum value for IF_R is 3.

R Value	IF_R[11:0]											
3	0	0	0	0	0	0	0	0	0	0	1	1
...	.	.	.	.	.	.	.	.	.	.	.	.
4095	1	1	1	1	1	1	1	1	1	1	1	1

RF_CPG – RF PLL Charge Pump Gain

This is used to control the magnitude of the RF PLL charge pump in steady state operation.

RF_CPG	Charge Pump State	Typical RF Charge Pump Current at 3 Volts (µA)
0	1X	95
1	2X	190
2	3X	285
3	4X	380
4	5X	475
5	6X	570
6	7X	665
7	8X	760
8	9X	855
9	10X	950
10	11X	1045
11	12X	1140
12	13X	1235
13	14X	1330
14	15X	1425
15	16X	1520

ACCESS – Register Access word

It is mandatory that the first 5 registers R0-R4 be programmed. The programming of registers R5-R7 is optional. The ACCESS[3:0] bits determine which additional registers need to be programmed. Any one of these registers can be individually programmed. According to the table below, when the state of a register is in default mode, all the bits in that register are forced to a default state and it is not necessary to program this register. When the register is programmable, it needs to be programmed through the MICROWIRE. Using this register access technique, the programming required is reduced up to 37%.

ACCESS Bit	Register Location	Register Controlled
ACCESS[0]	R3[20]	Must be set to 1
ACCESS[1]	R3[21]	R5
ACCESS[2]	R3[22]	R6
ACCESS[3]	R3[23]	R7

Copyright © 2007–2013, Texas Instruments Incorporated

The default conditions the registers is shown below:

Register	23	22	21	20	19	18	17	16	15	14	13	12	11	10	9	8	7	6	5	4	3	2	1	0
	Data[19:0]																				**C3**	**C2**	**C1**	**C0**
R4	R4 Must be programmed manually.																							
R5	0	0	0	0	0	0	0	0	0	0	0	0	0	0	0	0	0	0	0	0	1	0	1	1
R6	0	0	0	0	0	0	0	0	0	0	0	0	0	0	0	0	0	0	0	0	1	1	0	1
R7	0	0	0	0	0	0	0	0	0	0	0	0	1	0	0	1	0	0	0	0	1	1	1	1

This corresponds to the following bit settings.

Register	Bit Location	Bit Name	Bit Description	Bit Value	Bit State
R4	R4[23]	ATPU	Autopowerup	0	Disabled
	R4[17:16]	DITH	Dithering	2	Strong
	R4[15:16]	FM	Modulator Order	3	3rd Order
	R4[23]	OSC_2X	Oscillator Doubler	0	Disabled
	R4[23]	OSC_OUT	OSCout Pin Enable	0	Disabled
	R4[23]	IF_CPP	IF Charge Pump Polarity	1	Positive
	R4[23]	RF_CPP	RF Charge Pump Polarity	1	Positive
	R4[23]	IF_P	IF PLL Prescaler	1	16/17
	R4[7:4]	MUX	Ftest/LD Output	0	Disabled
R5	R5[23:14]	RF_FD[21:12]	Extended Fractional Denominator	0	Disabled
	R5[13:4]	RF_FN[21:12]	Extended Fractional Numerator	0	Disabled
R6	R6[23:22]	CSR	Cycle Slip Reduction	0	Disabled
	R6[21:18]	RF_CPF	Fastlock Charge Pump Current	0	Disabled
	R6[17:4]	RF_TOC	RF Timeout Counter	0	Disabled
R7	R7[13]	DIV4	Lock Detect Adjustment	0	Disabled (Fcomp ≤ 20 MHz)
	R7[7]	IF_RST	IF PLL Counter Reset	0	Disabled
	R7[6]	RF_RST	RF PLL Counter Reset	0	Disabled
	R7[5]	IF_CPT	IF PLL Tri-State	0	Disabled
	R7[4]	RF_CPT	RF PLL Tri-State	0	Disabled

Copyright © 2007–2013, Texas Instruments Incorporated

R4 REGISTER

This register controls the conditions for the RF PLL in Fastlock.

REG	23	22	21	20	19	18	17	16	15	14	13	12	11	10	9	8	7	6	5	4	3	2	1	0
	DATA[19:0]																				C3	C2	C1	C0
R4	ATPU	0	1	0	0	0	DITH [1:0]		FM [1:0]		0	OSC _2X	OSC _OUT	IF_ CPP	RF_ CPP	IF_P	MUX [3:0]				1	0	0	1

MUX[3:0] Frequency Out & Lock Detect MUX

These bits determine the output state of the Ftest/LD pin.

MUX[3:0]				Output Type	Output Description
0	0	0	0	High Impedance	Disabled
0	0	0	1	Push-Pull	General purpose output, Logical “High” State
0	0	1	0	Push-Pull	General purpose output, Logical “Low” State
0	0	1	1	Push-Pull	RF & IF Digital Lock Detect
0	1	0	0	Push-Pull	RF Digital Lock Detect
0	1	0	1	Push-Pull	IF Digital Lock Detect
0	1	1	0	Open Drain	RF & IF Analog Lock Detect
0	1	1	1	Open Drain	RF Analog Lock Detect
1	0	0	0	Open Drain	IF Analog Lock Detect
1	0	0	1	Push-Pull	RF & IF Analog Lock Detect
1	0	1	0	Push-Pull	RF Analog Lock Detect
1	0	1	1	Push-Pull	IF Analog Lock Detect
1	1	0	0	Push-Pull	IF R Divider divided by 2
1	1	0	1	Push-Pull	IF N Divider divided by 2
1	1	1	0	Push-Pull	RF R Divider divided by 2
1	1	1	1	Push-Pull	RF N Divider divided by 2

IF_P – IF Prescaler

When this bit is set to 0, the 8/9 prescaler is used. Otherwise the 16/17 prescaler is used.

IF_P	IF Prescaler	Maximum Frequency
0	8/9	800 MHz
1	16/17	800 MHz

RF_CPP – RF PLL Charge Pump Polarity

RF_CPP	RF Charge Pump Polarity
0	Negative
1	Positive (Default)

IF_CPP – IF PLL Charge Pump Polarity

For a positive phase detector polarity, which is normally the case, set this bit to 1. Otherwise set this bit for a negative phase detector polarity.

IF_CPP	IF Charge Pump Polarity
0	Negative
1	Positive

OSC_OUT Oscillator Output Buffer Enable

OSC_OUT	OSCout Pin
0	Disabled (High Impedance)
1	Buffered output of OSCin pin

OSC2X – Oscillator Doubler Enable

When this bit is set to 0, the oscillator doubler is disabled and the TCXO frequency presented to the IF R and RF R counters is equal to that of the input frequency of the OSCin pin. When this bit is set to 1, the TCXO frequency presented to the RF R counter is doubled. Phase noise added by the doubler is negligible.

OSC2X	Frequency Presented to RF R Counter	Frequency Presented to IF R Counter
0	f_{OSCin}	f_{OSCin}
1	2 x f_{OSCin}	

FM[1:0] – Fractional Mode

Determines the order of the delta-sigma modulator. Higher order delta-sigma modulators reduce the spur levels closer to the carrier by pushing this noise to higher frequency offsets from the carrier. In general, the order of the loop filter should be at least one greater than the order of the delta-sigma modulator in order to allow for sufficient roll-off.

FM	Function
0	Fractional PLL mode with a 4th order delta-sigma modulator
1	Disable the delta-sigma modulator. Recommended for test use only.
2	Fractional PLL mode with a 2nd order delta-sigma modulator
3	Fractional PLL mode with a 3rd order delta-sigma modulator

DITH[1:0] – Dithering Control

Dithering is a technique used to spread out the spur energy. Enabling dithering can reduce the main fractional spurs, but can also give rise to a family of smaller spurs. Whether dithering helps or hurts is application specific. Enabling the dithering may also increase the phase noise. In most cases where the fractional numerator is zero, dithering usually degrades performance.

Dithering tends to be most beneficial in applications where there is insufficient filtering of the spurs. This often occurs when the loop bandwidth is very wide or a higher order delta-sigma modulator is used. Dithering tends not to impact the main fractional spurs much, but has a much larger impact on the sub-fractional spurs. If it is decided that dithering will be used, best results will be obtained when the fractional denominator is at least 1000.

DITH	Dithering Mode Used
0	Disabled
1	Weak Dithering
2	Strong Dithering
3	Reserved

ATPU – PLL Automatic Power Up

When this bit is set to 1, both the RF and IF PLL power up when the R0 register is written to. When the R0 register is written to, the PD_RF and PD_IF bits are changed to 0 in the PLL registers. The exception to this case is when the CE pin is low. In this case, the ATPU function is disabled.

Copyright © 2007–2013, Texas Instruments Incorporated

R5 REGISTER

REG	23	22	21	20	19	18	17	16	15	14	13	12	11	10	9	8	7	6	5	4	3	2	1	0
	DATA[19:0]																				C3	C2	C1	C0
R5	RF_FD[21:12]										RF_FN[21:12]										1	0	1	1

Fractional Numerator Determination { RF_FN[21:12], RF_FN[11:0], ACCESS[1] }

In the case that the ACCESS[1] bit is 0, then the part operates in 12-bit fractional mode, and the RF_FN2[21:12] bits become do not care bits. When the ACCESS[1] bit is set to 1, the part operates in 22-bit mode and the fractional numerator is expanded from 12 to 22-bits.

Fractional	**RF_FN[21:12]**										**RF_FN[11:0]**											
Numerator	(These bits only apply in 22- bit mode)																					
0	In 12- bit mode, these are do not care. In 22- bit mode, for N <4096, these bits should be all set to 0.										0	0	0	0	0	0	0	0	0	0	0	0
1											0	0	0	0	0	0	0	0	0	0	0	1
...											.	.	.	.	.	.	.	.	.	.	.	.
4095											1	1	1	1	1	1	1	1	1	1	1	1
4096	0	0	0	0	0	0	0	0	0	1	0	0	0	0	0	0	0	0	0	0	0	0
...	.	.	.	.	.	.	.	.	.	.	.	.	.	.	.	.	.	.	.	.	.	.
4194303	1	1	1	1	1	1	1	1	1	1	1	1	1	1	1	1	1	1	1	1	1	1

Fractional Denominator Determination { RF_FD[21:12], RF_FD[11:0], ACCESS[1]}

In the case that the ACCESS[1] bit is 0, then the part is operates in the 12-bit fractional mode, and the RF_FD[21:12] bits become do not care bits. When the ACCESS[1] is set to 1, the part operates in 22-bit mode and the fractional denominator is expanded from 12 to 22-bits.

Fractional	**RF_FD[21:12]**										**RF_FD[11:0]**											
Denominator	(These bits only apply in 22- bit mode)																					
0	In 12- bit mode, these are do not care. In 22- bit mode, for N <4096, these bits should be all set to 0.										0	0	0	0	0	0	0	0	0	0	0	0
1											0	0	0	0	0	0	0	0	0	0	0	1
...											.	.	.	.	.	.	.	.	.	.	.	.
4095											1	1	1	1	1	1	1	1	1	1	1	1
4096	0	0	0	0	0	0	0	0	0	1	0	0	0	0	0	0	0	0	0	0	0	0
...	.	.	.	.	.	.	.	.	.	.	.	.	.	.	.	.	.	.	.	.	.	.
4194303	1	1	1	1	1	1	1	1	1	1	1	1	1	1	1	1	1	1	1	1	1	1

R6 REGISTER

REG	23	22	21	20	19	18	17	16	15	14	13	12	11	10	9	8	7	6	5	4	3	2	1	0
	DATA[19:0]																				C3	C2	C1	C0
R6	CSR[1:0]		RF_CPF[3:0]				RF_TOC[13:0]														1	1	0	1

RF_TOC – RF Time Out Counter and Control for FLoutRF Pin

The RF_TOC[13:0] word controls the operation of the RF Fastlock circuitry as well as the function of the FLoutRF output pin. When this word is set to a value between 0 and 3, the RF Fastlock circuitry is disabled and the FLoutRF pin operates as a general purpose CMOS TRI-STATE I/O. When RF_TOC is set to a value between 4 and 16383, the RF Fastlock mode is enabled and the FLoutRF pin is utilized as the RF Fastlock output pin. The value programmed into the RF_TOC[13:0] word represents two times the number of phase detector comparison cycles the RF synthesizer will spend in the Fastlock state.

RF_TOC	Fastlock Mode	Fastlock Period [CP events]	FLoutRF Pin Functionality
0	Disabled	N/A	High Impedance
1	Manual	N/A	Logic “0” State. Forces all Fastlock conditions
2	Disabled	N/A	Logic “0” State
3	Disabled	N/A	Logic “1” State
4	Enabled	4X2 = 8	Fastlock
5	Enabled	5X2 = 10	Fastlock
…	Enabled	…	Fastlock
16383	Enabled	16383X2 = 32766	Fastlock

RF_CPF – RF PLL Fastlock Charge Pump Current

Specify the charge pump current for the Fastlock operation mode for the RF PLL. Note that the Fastlock charge pump current, steady state current, and CSR control are all interrelated.

RF_CPF	RF Charge Pump State	Typical RF Charge Pump Current at 3 Volts (μA)
0	1X	95
1	2X	190
2	3X	285
3	4X	380
4	5X	475
5	6X	570
6	7X	665
7	8X	760
8	9X	855
9	10X	950
10	11X	1045
11	12X	1140
12	13X	1235
13	14X	1330
14	15X	1425
15	16X	1520

Copyright © 2007–2013, Texas Instruments Incorporated

CSR[1:0] – RF Cycle Slip Reduction

CSR controls the operation of the Cycle Slip Reduction Circuit. This circuit can be used to reduce the occurrence of phase detector cycle slips. Note that the Fastlock charge pump current, steady state current, and CSR control are all interrelated. Refer to CYCLE SLIP REDUCTION AND FASTLOCK for information on how to use this.

CSR	CSR State	Sample Rate Reduction Factor
0	Disabled	1
1	Enabled	1/2
2	Enabled	1/4
3	Enabled	1/16

R7 REGISTER

REG	23	22	21	20	19	18	17	16	15	14	13	12	11	10	9	8	7	6	5	4	3	2	1	0
	Data[19:0]																				C3	C2	C1	C0
R7	0	0	0	0	0	0	0	0	0	0	DIV4	0	1	0	0	0	IF_ RST	RF_ RST	IF_ CPT	RF_ CPT	1	1	1	1

DIV4 – RF Digital Lock Detect Divide By 4

Because the digital lock detect function is based on a phase error, it becomes more difficult to detect a locked condition for larger comparison frequencies. When this bit is enabled, it subdivides the RF PLL comparison frequency (it does not apply to the IF comparison frequency) presented to the digital lock detect circuitry by 4. This enables this circuitry to work at higher comparison frequencies. It is recommended that this bit be enabled whenever the comparison frequency exceeds 20 MHz and RF digital lock detect is being used.

IF_RST – IF PLL Counter Reset

When this bit is enabled, the IF PLL N and R counters are reset, and the charge pump is put in a Tri-State condition. This feature should be disabled for normal operation. Note that a counter reset is applied whenever the chip is powered up via software or CE pin.

IF_RST	IF PLL N and R Counters	IF PLL Charge Pump
0 (Default)	Normal Operation	Normal Operation
1	Counter Reset	Tri-State

RF_RST – RF PLL Counter Reset

When this bit is enabled, the RF PLL N and R counters are reset and the charge pump is put in a Tri-State condition. This feature should be disabled for normal operation. This feature should be disabled for normal operation. Note that a counter reset is applied whenever the chip is powered up via software or CE pin.

RF_RST	RF PLL N and R Counters	RF PLL Charge Pump
0 (Default)	Normal Operation	Normal Operation
1	Counter Reset	Tri-State

RF_TRI – RF Charge Pump Tri-State

When this bit is enabled, the RF PLL charge pump is put in a Tri-State condition, but the counters are not reset. This feature is typically disabled for normal operation.

RF_TRI	RF PLL N and R Counters	RF PLL Charge Pump
0 (Default)	Normal Operation	Normal Operation
1	Normal Operation	Tri-State

Copyright © 2007–2013, Texas Instruments Incorporated

IF_TRI – IF Charge Pump Tri-State

When this bit is enabled, the IF PLL charge pump is put in a Tri-State condition, but the counters are not reset. This feature is typically disabled for normal operation.

IF_TRI	IF PLL N and R Counters	IF PLL Charge Pump
0 (Default)	Normal Operation	Normal Operation
1	Normal Operation	Tri-State

Copyright © 2007–2013, Texas Instruments Incorporated

REVISION HISTORY

Changes from Original (March 2013) to Revision A	Page
• Changed layout of National Data Sheet to TI format	40

PACKAGING INFORMATION

Orderable Device	Status (1)	Package Type	Package Drawing	Pins	Package Qty	Eco Plan (2)	Lead/Ball Finish	MSL Peak Temp (3)	Op Temp (°C)	Top-Side Markings (4)	Samples
LMX2487ESQ/NOPB	ACTIVE	WQFN	RTW	24	1000	Green (RoHS & no Sb/Br)	CU SN	Level-3-260C-168 HR	-40 to 85	2487E>D	Samples
LMX2487ESQE/NOPB	ACTIVE	WQFN	RTW	24	250	Green (RoHS & no Sb/Br)	CU SN	Level-3-260C-168 HR	-40 to 85	2487E>D	Samples
LMX2487ESQX/NOPB	ACTIVE	WQFN	RTW	24	4500	Green (RoHS & no Sb/Br)	CU SN	Level-3-260C-168 HR	-40 to 85	2487E>D	Samples

(1) The marketing status values are defined as follows:
ACTIVE: Product device recommended for new designs.
LIFEBUY: TI has announced that the device will be discontinued, and a lifetime-buy period is in effect.
NRND: Not recommended for new designs. Device is in production to support existing customers, but TI does not recommend using this part in a new design.
PREVIEW: Device has been announced but is not in production. Samples may or may not be available.
OBSOLETE: TI has discontinued the production of the device.

(2) Eco Plan - The planned eco-friendly classification: Pb-Free (RoHS), Pb-Free (RoHS Exempt), or Green (RoHS & no Sb/Br) - please check http://www.ti.com/productcontent for the latest availability information and additional product content details.
TBD: The Pb-Free/Green conversion plan has not been defined.
Pb-Free (RoHS): TI's terms "Lead-Free" or "Pb-Free" mean semiconductor products that are compatible with the current RoHS requirements for all 6 substances, including the requirement that lead not exceed 0.1% by weight in homogeneous materials. Where designed to be soldered at high temperatures, TI Pb-Free products are suitable for use in specified lead-free processes.
Pb-Free (RoHS Exempt): This component has a RoHS exemption for either 1) lead-based flip-chip solder bumps used between the die and package, or 2) lead-based die adhesive used between the die and leadframe. The component is otherwise considered Pb-Free (RoHS compatible) as defined above.
Green (RoHS & no Sb/Br): TI defines "Green" to mean Pb-Free (RoHS compatible), and free of Bromine (Br) and Antimony (Sb) based flame retardants (Br or Sb do not exceed 0.1% by weight in homogeneous material)

(3) MSL, Peak Temp. -- The Moisture Sensitivity Level rating according to the JEDEC industry standard classifications, and peak solder temperature.

(4) Only one of markings shown within the brackets will appear on the physical device.

Important Information and Disclaimer: The information provided on this page represents TI's knowledge and belief as of the date that it is provided. TI bases its knowledge and belief on information provided by third parties, and makes no representation or warranty as to the accuracy of such information. Efforts are underway to better integrate information from third parties. TI has taken and continues to take reasonable steps to provide representative and accurate information but may not have conducted destructive testing or chemical analysis on incoming materials and chemicals. TI and TI suppliers consider certain information to be proprietary, and thus CAS numbers and other limited information may not be available for release.

In no event shall TI's liability arising out of such information exceed the total purchase price of the TI part(s) at issue in this document sold by TI to Customer on an annual basis.

TAPE AND REEL INFORMATION

REEL DIMENSIONS

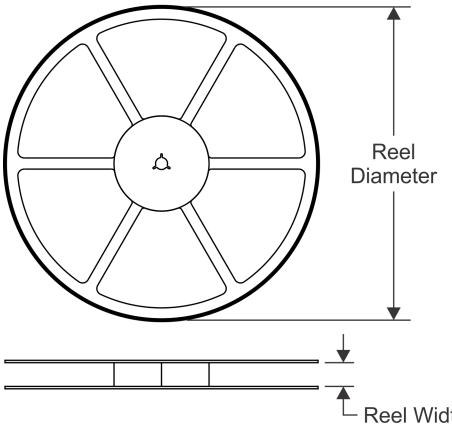

TAPE DIMENSIONS

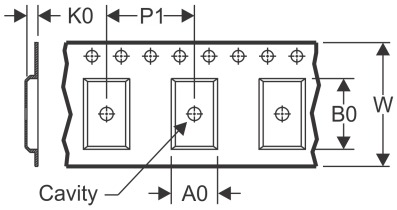

A0	Dimension designed to accommodate the component width
B0	Dimension designed to accommodate the component length
K0	Dimension designed to accommodate the component thickness
W	Overall width of the carrier tape
P1	Pitch between successive cavity centers

QUADRANT ASSIGNMENTS FOR PIN 1 ORIENTATION IN TAPE

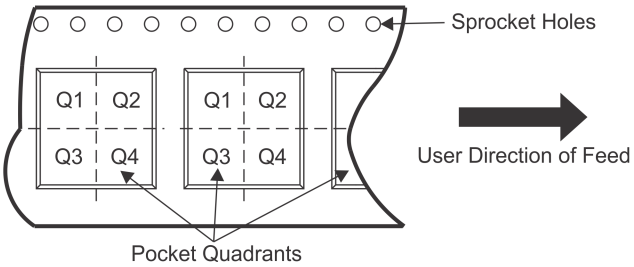

*All dimensions are nominal

Device	Package Type	Package Drawing	Pins	SPQ	Reel Diameter (mm)	Reel Width W1 (mm)	A0 (mm)	B0 (mm)	K0 (mm)	P1 (mm)	W (mm)	Pin1 Quadrant
LMX2487ESQ/NOPB	WQFN	RTW	24	1000	178.0	12.4	4.3	4.3	1.3	8.0	12.0	Q1
LMX2487ESQE/NOPB	WQFN	RTW	24	250	178.0	12.4	4.3	4.3	1.3	8.0	12.0	Q1
LMX2487ESQX/NOPB	WQFN	RTW	24	4500	330.0	12.4	4.3	4.3	1.3	8.0	12.0	Q1

TAPE AND REEL BOX DIMENSIONS

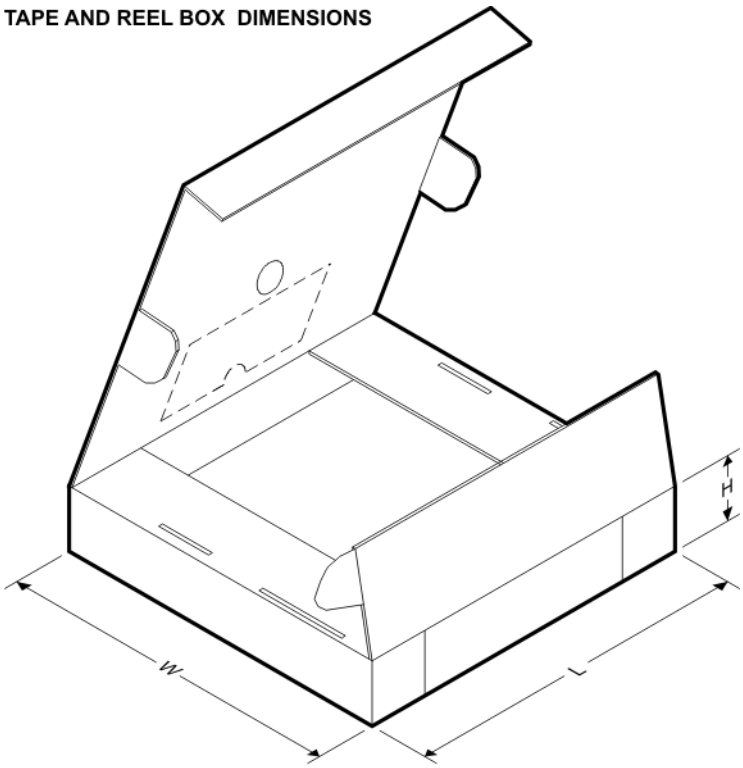

*All dimensions are nominal

Device	Package Type	Package Drawing	Pins	SPQ	Length (mm)	Width (mm)	Height (mm)
LMX2487ESQ/NOPB	WQFN	RTW	24	1000	213.0	191.0	55.0
LMX2487ESQE/NOPB	WQFN	RTW	24	250	213.0	191.0	55.0
LMX2487ESQX/NOPB	WQFN	RTW	24	4500	358.0	343.0	63.0

RTW0024A

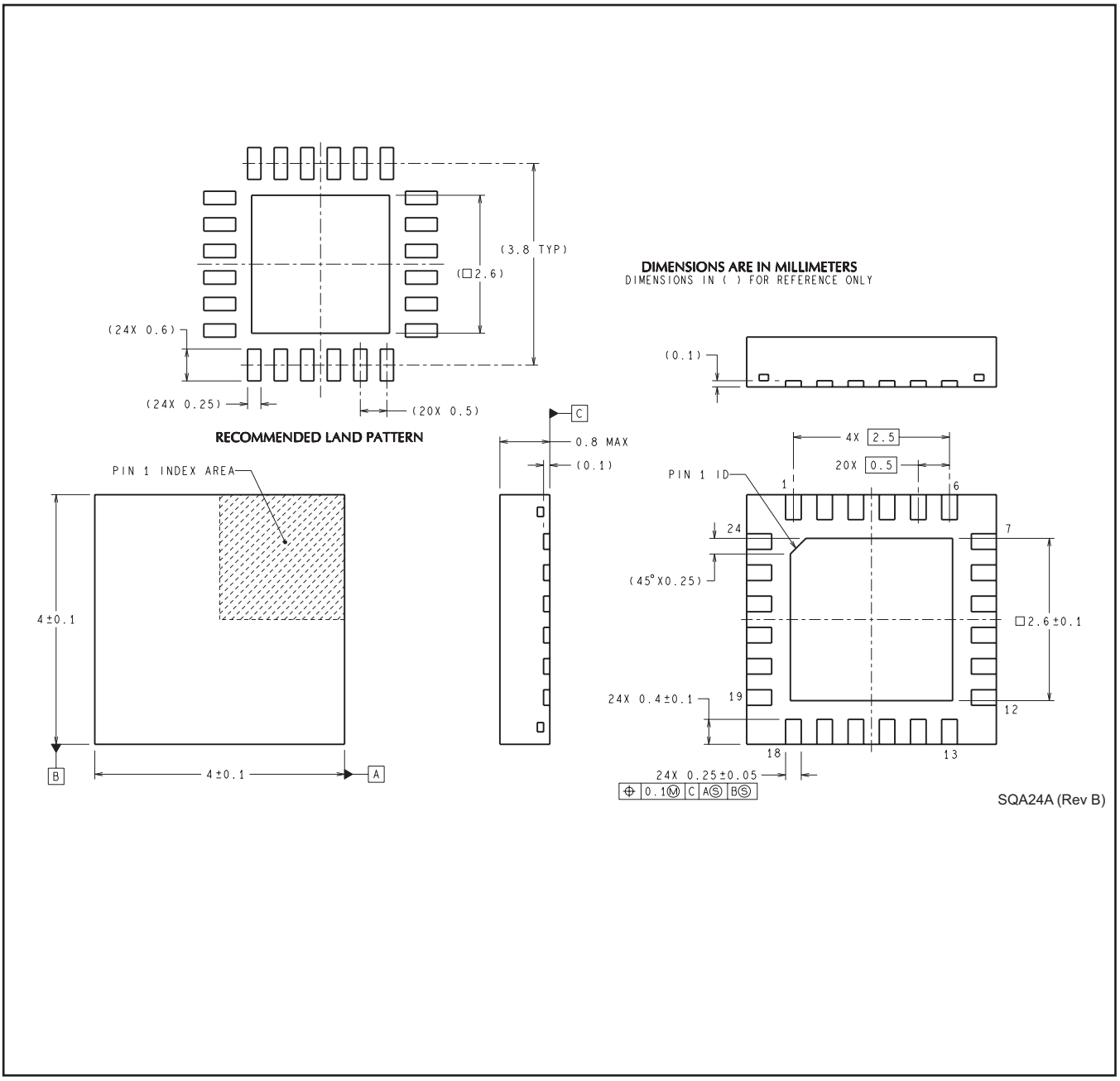
(3.8 TYP)
(□2.6)
(24X 0.6)
(24X 0.25)
(20X 0.5)
RECOMMENDED LAND PATTERN
DIMENSIONS ARE IN MILLIMETERS
DIMENSIONS IN ( ) FOR REFERENCE ONLY
(0.1)
C
0.8 MAX
(0.1)
PIN 1 INDEX AREA
4±0.1
B
4±0.1
A
4X 2.5
20X 0.5
PIN 1 ID
1
6
24
7
(45°X0.25)
□2.6±0.1
24X 0.4±0.1
19
12
18
13
24X 0.25±0.05
0.1Ⓜ C AⓈ BⓈ
SQA24A (Rev B)

IMPORTANT NOTICE

Texas Instruments Incorporated and its subsidiaries (TI) reserve the right to make corrections, enhancements, improvements and other changes to its semiconductor products and services per JESD46, latest issue, and to discontinue any product or service per JESD48, latest issue. Buyers should obtain the latest relevant information before placing orders and should verify that such information is current and complete. All semiconductor products (also referred to herein as “components”) are sold subject to TI’s terms and conditions of sale supplied at the time of order acknowledgment.

TI warrants performance of its components to the specifications applicable at the time of sale, in accordance with the warranty in TI’s terms and conditions of sale of semiconductor products. Testing and other quality control techniques are used to the extent TI deems necessary to support this warranty. Except where mandated by applicable law, testing of all parameters of each component is not necessarily performed.

TI assumes no liability for applications assistance or the design of Buyers’ products. Buyers are responsible for their products and applications using TI components. To minimize the risks associated with Buyers’ products and applications, Buyers should provide adequate design and operating safeguards.

TI does not warrant or represent that any license, either express or implied, is granted under any patent right, copyright, mask work right, or other intellectual property right relating to any combination, machine, or process in which TI components or services are used. Information published by TI regarding third-party products or services does not constitute a license to use such products or services or a warranty or endorsement thereof. Use of such information may require a license from a third party under the patents or other intellectual property of the third party, or a license from TI under the patents or other intellectual property of TI.

Reproduction of significant portions of TI information in TI data books or data sheets is permissible only if reproduction is without alteration and is accompanied by all associated warranties, conditions, limitations, and notices. TI is not responsible or liable for such altered documentation. Information of third parties may be subject to additional restrictions.

Resale of TI components or services with statements different from or beyond the parameters stated by TI for that component or service voids all express and any implied warranties for the associated TI component or service and is an unfair and deceptive business practice. TI is not responsible or liable for any such statements.

Buyer acknowledges and agrees that it is solely responsible for compliance with all legal, regulatory and safety-related requirements concerning its products, and any use of TI components in its applications, notwithstanding any applications-related information or support that may be provided by TI. Buyer represents and agrees that it has all the necessary expertise to create and implement safeguards which anticipate dangerous consequences of failures, monitor failures and their consequences, lessen the likelihood of failures that might cause harm and take appropriate remedial actions. Buyer will fully indemnify TI and its representatives against any damages arising out of the use of any TI components in safety-critical applications.

In some cases, TI components may be promoted specifically to facilitate safety-related applications. With such components, TI’s goal is to help enable customers to design and create their own end-product solutions that meet applicable functional safety standards and requirements. Nonetheless, such components are subject to these terms.

No TI components are authorized for use in FDA Class III (or similar life-critical medical equipment) unless authorized officers of the parties have executed a special agreement specifically governing such use.

Only those TI components which TI has specifically designated as military grade or “enhanced plastic” are designed and intended for use in military/aerospace applications or environments. Buyer acknowledges and agrees that any military or aerospace use of TI components which have ***not*** been so designated is solely at the Buyer's risk, and that Buyer is solely responsible for compliance with all legal and regulatory requirements in connection with such use.

TI has specifically designated certain components as meeting ISO/TS16949 requirements, mainly for automotive use. In any case of use of non-designated products, TI will not be responsible for any failure to meet ISO/TS16949.

Products		**Applications**	
Audio	www.ti.com/audio	Automotive and Transportation	www.ti.com/automotive
Amplifiers	amplifier.ti.com	Communications and Telecom	www.ti.com/communications
Data Converters	dataconverter.ti.com	Computers and Peripherals	www.ti.com/computers
DLP® Products	www.dlp.com	Consumer Electronics	www.ti.com/consumer-apps
DSP	dsp.ti.com	Energy and Lighting	www.ti.com/energy
Clocks and Timers	www.ti.com/clocks	Industrial	www.ti.com/industrial
Interface	interface.ti.com	Medical	www.ti.com/medical
Logic	logic.ti.com	Security	www.ti.com/security
Power Mgmt	power.ti.com	Space, Avionics and Defense	www.ti.com/space-avionics-defense
Microcontrollers	microcontroller.ti.com	Video and Imaging	www.ti.com/video
RFID	www.ti-rfid.com		
OMAP Applications Processors	www.ti.com/omap	**TI E2E Community**	e2e.ti.com
Wireless Connectivity	www.ti.com/wirelessconnectivity		

Mailing Address: Texas Instruments, Post Office Box 655303, Dallas, Texas 75265
Copyright © 2013, Texas Instruments Incorporated