Drawing Number – W44

Outline Number – 101A340

WESTCODE

An IXYS Company

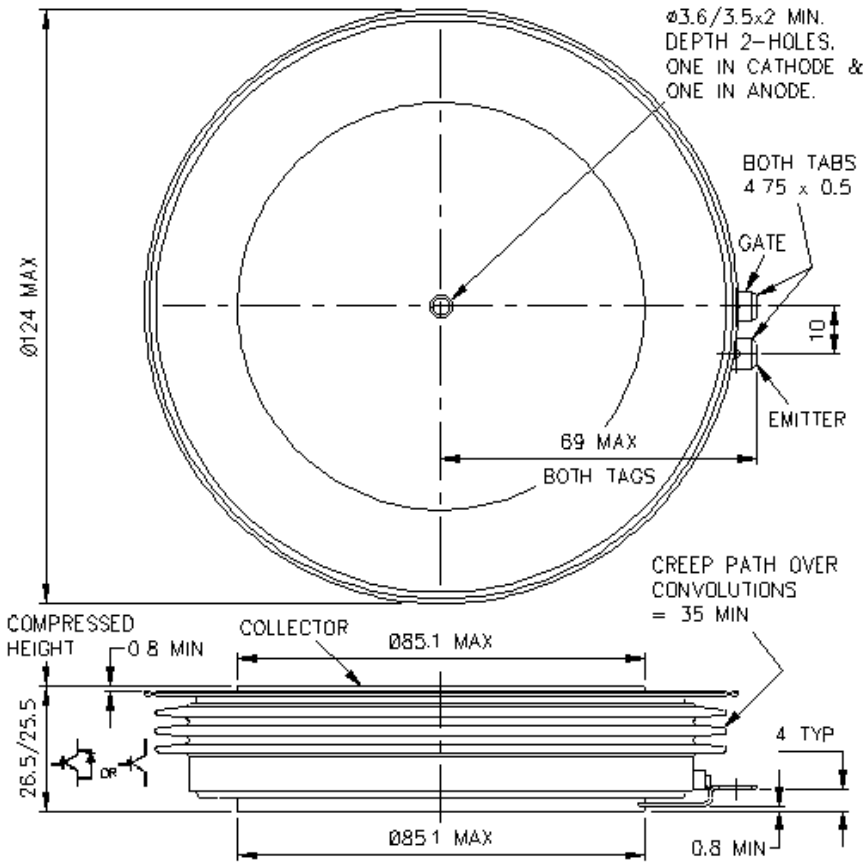

Weight 1200g

Westcode Customer Services email: wsl.sales@westcode.com **Telephone: +44 (0)1249 444524 Fax: +44 (0)1249 659448**