HCPL-7510/7520

Isolated Linear Sensing IC Evaluation Board

User's Guide

Product Description

The HCPL-7510/7520 isolated linear current sensing IC is designed for current sensing in low-power electronic motor drives. In a typical implementation, motor current flows through an external resistor and the resulting analog voltage drop is sensed by the HCPL-7510/7520. An output voltage is created on the other side of the HCPL-7510/7520 optical isolation barrier. The single-ended output voltage is proportional to the motor current (see Figure 1 for the functional diagram). Since common-mode voltage swings of several hundred volts in tens of nanoseconds are common in modern switching inverter motor drives, the HCPL-7510/7520 was designed to ignore very high common-mode transient slew rates (of at least 10 kV/μs).

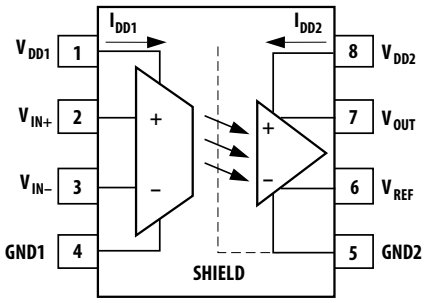

Figure 1. HCPL-7510/7520 functional diagram.

The high CMR capability of the HCPL-7510/7520 isolation amplifier provides the precision and stability needed to accurately monitor motor current in high noise motor control environments, providing for smoother control (less "torque ripple") in various types of motor control applications.

The product can also be used for general analog signal isolation applications. For general applications, we recommend the HCPL-7510/7520 (gain tolerance of ±3% and ±5% respectively). The HCPL-7510/7520 utilizes sigma-delta (Σ-Δ) analog-to-digital converter technology to delivery offset and gain accuracy and stability over time and temperature. This performance is delivered in a compact, auto-insert, industry standard 8-pin DIP package that meets worldwide regulatory safety standards. (A gull-wing surface mount option #300 is also available).

About This Board

The HCPL-7510/7520 evaluation board allows a power-inverter designer to evaluate the current-monitoring, short-circuit fault detection and high common-mode transient rejection capability of the HCPL-7510/7520 analog isolation amplifier. The HCPL-7510/7520, designed for current-sensing applications, may also be used for general voltage sensing.

The HCPL-7510/7520 incorporates a microcontroller-compatible analog output and features into a small 300-mil-wide surface-mount package, resulting in greatly simplified current-sense designs. A reference voltage input, VREF, may be connected directly to (and driven from) the A/D converter reference voltage. (Refer to Figure 2.) With this connection the full-scale output of the HCPL–7510/7520 matches the full-scale input of the A/D for seamless matching to the A/D.

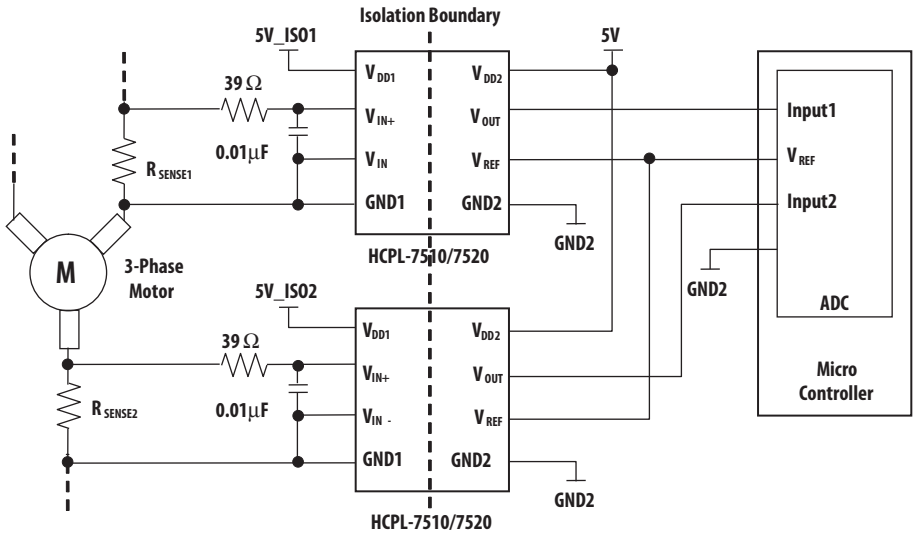

Figure 2. A simplified low cost three phase current sensing circuit with HCPL-7510/7520.

The evaluation board is pictured in Figure 3. The circuit schematic is shown in Figure 4. Isolated power to the board is provided by attaching a 9V battery to the input supply V_{DD1}. (The input power V_{DD1} is typically derived from the upper-gate drive power supply or from a separate transformer winding in the case of phase current sensing.) When measuring phase-current, a low-value resistor (0.5 to 50mΩ) is inserted in series with the phase-current wire. The voltage across this current-sense resistor is measured by the isolation amplifier. The input voltage range for the HCPL-7510/7520, (–200mV to +200mV), is kept small to minimize power dissipation across the current-sense resistor. There are two holes on the board for inserting a thru-hole current-sense resistor (and two pads for a surface-mount current-sense resistor if desired.)

A 5V power supply needs to be connected to V_{DD2} to provide the output-side power.

As can be seen from the white square border on the board, the isolation circuitry is easily contained within a small area while maintaining adequate spacing for good voltage isolation and easy assembly. The evaluation board has been enlarged to include an optional adjustable voltage reference circuit (connected to V_{REF} by setting the switch S1 to the up position.) Four drilled holes at the corners of the board allow mounting of feet for stand-alone use.

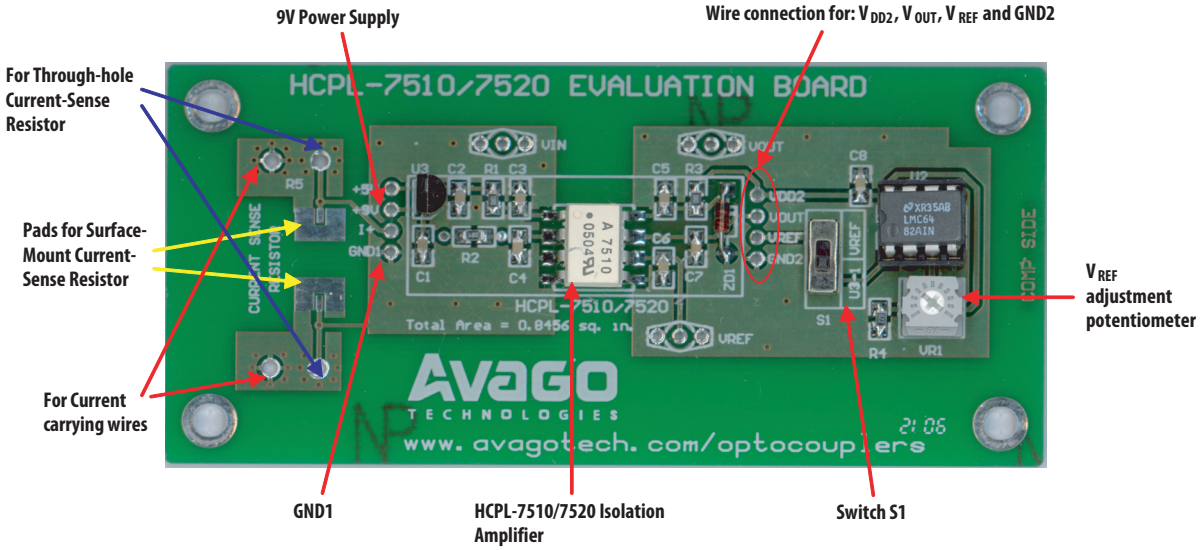

Figure 3. The HCPL-7510/7520 Evaluation Board (Top View).

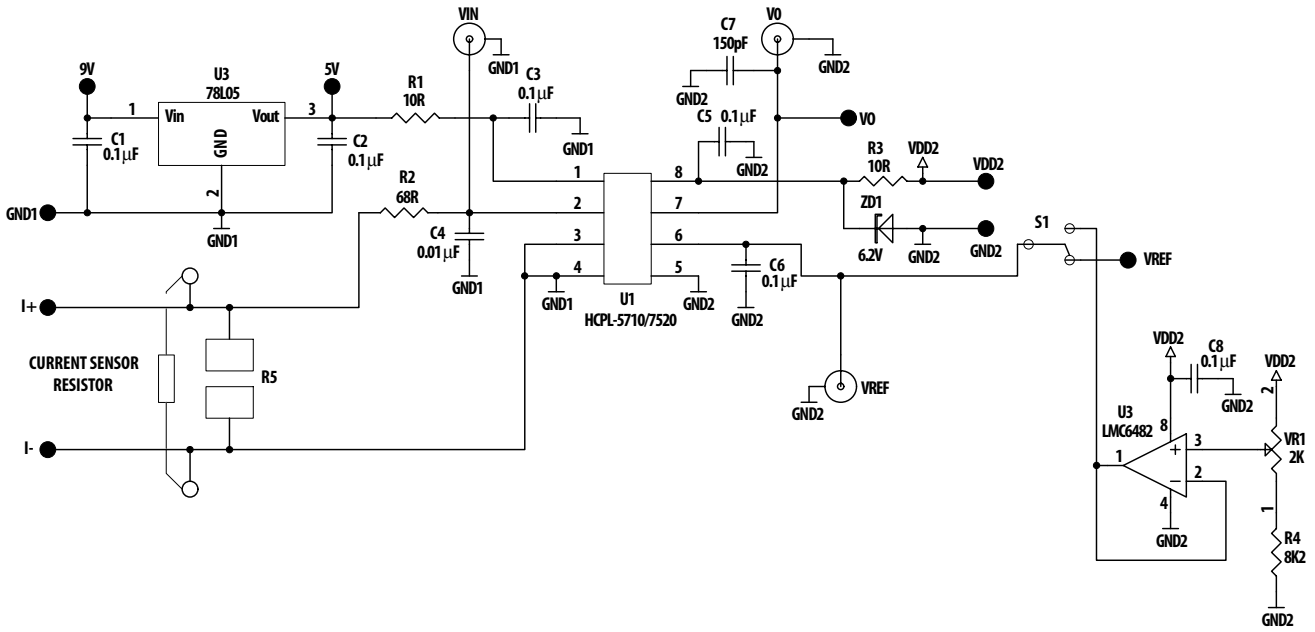

Figure 4. The schematic for HCPL-7510/7520 evaluation board.

Board connection and operation

1. Input power supply: Locate the board holes "9V" and "GND1" (on the left side of the evaluation board as pictured in Figure 3.) Attach a 9V battery to these board holes. (Alternatively, a 5V power supply may be supplied directly the holes "5V" and "GND1". If using the direct connection, however, it is recommended to disconnect the 78L05 voltage-regulator output from the circuit and avoid damaging the 78L05).
2. Attach an output power supply (5V +/- 10%) to "VDD2" and "GND2". Note: For evaluation purposes where a low-voltage signal is applied to the input and isolation is not required, the same power supply may be used for direct-connect to the input ("5V" / "GND1") and output ("V_{DD2}"/"GND2").
3. Connect the VREF input:

   3a. For connection to A/D V_{REF} or external power supply: Set the switch S1 to the "up" position. Connect a power supply (5V max.) or voltage reference from the A/D to the "V_{REF}" hole (Refer to Figure 3.) The Vref supply should be referenced to GND2.

   3b. To use on-board adjustable V_{REF}: Set the switch S1 to the "down" position. The reference input to V_{REF} may be adjusted up (clockwise) or down (anti-clockwise) by tweaking the potentiometer VR1.
4. Connect one wire to V_{OUT}, or alternatively, there are scope holes provided for inserting scope probe sockets to monitor the output. The holes are laid-out for Agilent scope probe sockets (N2765A or N2766A), but other scope sockets may be adapted to the holes.
5. (Connection of current-sense resistor:) Choose the appropriate resistor based on the desired input current range (see following Table 1). Refer to Figure 3 for insertion location. The "through-hole resistor" holes are spaced far enough to allow the resistor to easily fit in the board but close enough to minimize lead length. Use the surface-mount pads for an S/M current-sense resistor.

Selection of Current-Sense Resistors (Through-hole or Surface-Mount)

Use of the through-hole resistor in this evaluation board is most useful for applications requiring sensing of larger currents. Use of the surface mount is meaningful where minimum board space takes a priority and smaller currents are to be sensed. The recommended and maximum ratings for the board using any of the resistors included in the package are shown in Table 1.

Table 1. Selection guide for current sense resistors.

Parameter	LVR-5.005	LVR-3.01	LVR-3.02	LVR-3.05	WSC-2.02 (SMD)
Resistance (% tol.)	0.005Ω (1%)	0.01Ω (1%)	0.02Ω (1%)	0.05Ω (1%)	0.020Ω (1%)
Max. rated power	5 watts	3 watts	3 watts	3 watts	2 watts
I_{PEAK}	44.7A [3]	24.5A [3]	12.5A [4]	5A [4]	10A [3]
I_{MAX} (RMS)	31.6A [3]	17.3A [3]	8.8A [4]	3.5A [4]	7.0A [3]
$V_{MAX,IN}$ [1]	0.224V	0.173V	0.250V	0.250V	0.200V
%Offset/FS (across temp.) [2]	1.34%	1.73%	1.20%	1.20%	1.50%

Notes:
1. In some cases, $V_{MAX,IN}$ is assumed to be 0.250V (which is greater than the maximum recommended input voltage.) In fact the HCPL–7510/7520 is capable of operating without significant loss of performance at this input level and therefore this level may be fine for occasional over-current conditions. $V_{MAX,IN}$ is taken to be the minimum of 0.250V and the maximum value which keeps dissipated power under the maximum rated power of the current-sense resistor.
2. %Off/FS is offset as a percent of $V_{MAX,IN}$ which is taken as full-scale input.
3. Peak/RMS current is limited by Maximum rated power.
4. Peak/RMS current is limited by $V_{MAX,IN}$.
5. For further recommendations of current sense resistors, please refer to the datasheet.

For product information and a complete list of distributors, please go to our web site: **www.avagotech.com**

Avago, Avago Technologies, and the A logo are trademarks of Avago Technologies Limited in the United States and other countries.
Data subject to change. Copyright © 2008 Avago Technologies Limited. All rights reserved.
AV02-1071EN - February 27, 2008