Isolated linear current sensing ICs

Avago Technologies' HCPL-7510/7520 optocouplers for current sensing in low-power inverter motor drives

Avago Technologies™, the industry leader in integrated optocoupler current sensing technology, provides wide range of products for industrial motor control systems. With the introduction of HCPL-7510/7520, the single-ended, isolated linear current sensing optocouplers, Avago broadens the current sensing product offering and reaffirms Avago's commitment to optocoupler products. HCPL-7510 and HCPL-7520 are isolated linear current sensing optocouplers specifically designed for current sensing in low-power inverter motor drives. These optocouplers fill the current sensing needs in low-power inverter motor control with appropriate parametric performance. It is available in auto-insertable 8-pin DIP package.

AVAGO TECHNOLOGIES

Key Specifications

Part Number	Package	Gain Tolerance	Non-Linearity (maximum)	Input Offset Voltage 50-50% (typical)	Prop Delay (typical)	CMR@Vcm= 1000V (typical)	Output Configuration
HCPL-7510	DIP-8	± 3%	0.4%	- 0.6mV	3.4µs	15kV/µs	Single-Ended
HCPL-7520	DIP-8	± 5%	0.4%	- 0.6mV	3.4µs	15kV/µs	Single-Ended

Features

- 15kV/us common-mode rejection at VCM =1000V
- Compact, auto-insertable standard 8-pin DIP package
- 100KHz bandwidth
- 0.06% non-linearity
- 8µV/°C input offset voltage vs temperature
- Single-ended amplifier output
- Worldwide safety approvals:
  - UL1577 (3750Vrms/1min)
  - CSA
  - IEC/EN/DIN EN 60747-5-2 (option 060 only)
- Advanced sigma-delta A/D converter technology

Applications

- Low-Power Inverter Current Sensing
- Inverter Motor Phase and Rail Current Sensing
- Switch Mode Power Supply Signal Isolation
- General Purpose Current Sensing and Monitoring
- General Purpose Analog Signal Isolation

Functional Diagram

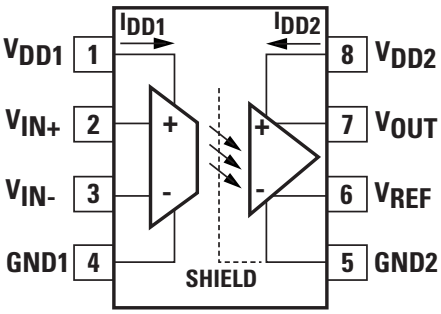

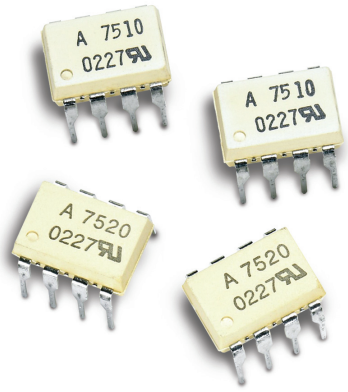

To find out more, please visit

www.avagotech.com/optocouplers

Avago, Avago Technologies, the A logo and LaserStream are trademarks of Agilent Technologies, Limited in the United States and other countries.

Data subject to change
Copyright © 2006 Avago Technologies, Ltd.
May 16, 2006
5988-9731EN

AVAGO TECHNOLOGIES