crydom Datasheet **Panel Mount**

Series 1-DCL

- Optically Coupled MOSFET output
- Ratings from 7A to 40A @ 200 VDC, and from 7A to 10A @ 500 VDC
- DC Control
- Relays are easily paralleled for higher-current applications

PRODUCT SELECTION

Load Voltage	7A	10A	12A	20A	40A
100 VDC	D1D07L		D1D12L	D1D20L	D1D40L
200 VDC	D2D07L		D2D12L		D2D40L
400 VDC	D4D07L		D4D12L		
500 VDC	D5D07L	D5D10L			

OUTPUT SPECIFICATIONS (1)

Description	7A	12A	20A	40A	7A	12A	40A	7A	12A	7A	10A
Operating Voltage Range	0-100	0-100	0-100	0-100	0-200	0-200	0-200	0-400	0-400	0-500	0-500
Maximum Off-State Leakage Current @ Rated Voltage [mA]	0.1	0.2	0.3	0.3	0.1	0.3	0.3	0.3	0.3	0.2	0.3
Maximum Load Current (3) [Adc]	7	12	20	40	7	12	40	7	12	7	10
Minimum Load Current [mA]	1	1	1	1	1	1	1	1	1	1	1
Maximum Surge Current [Adc] (10ms)	15	28	42	106	22	27	106	17	36	19	29
Maximum On-State Voltage Drop @ Rated Current [Vdc]	2.0	1.6	2.1	2.1	2.0	2.8	2.1	4.2	4.2	5.7	5.5
Thermal Resistance Junction to Case (Rjc) [°C/W]	2.2	1.34	1.06	0.83	1.5	1.06	0.83	1.06	0.8	1.0	0.8
Maximum On-State Resistance [RDS-ON][Ohms]	0.29	0.13	0.10	0.05	0.29	0.23	0.05	0.6	0.35	0.8	0.55

INPUT SPECIFICATIONS (1)

Description	
Control Voltage Range	3.5-32 VDC
Minimum Turn-On Voltage	3.5 VDC
Minimum Turn-Off Voltage	1.0 VDC
Minimum Input Current @ 3.5V	8.4 mA
Maximum Input Current @ 32VDC	10.6 mA
Nominal Input Impedance	See Note 4
Maximum Turn-On Time [msec]	1.0
Maximum Turn-Off Time [msec]	1.0

GENERAL SPECIFICATIONS

Description	Parameters
Dielectric Strength, Input/Output/Base (50/60Hz)	2500 VRMS
Minimum Insulation Resistance (@ 500 V DC)	10^9 Ohm
Maximum Capacitance, Input/Output	50 pF
Ambient Operating Temperature Range	-40 to 80°C
Ambient Storage Temperature Range	-40 to 125 °C
Weight (typical)	3.0 oz (86.5g)
Encapsulation	Thermally conductive Epoxy
Terminals	Screws and Saddle Clamps Furnished, Unmounted
Recommended Terminal Screw Torque Range:	6-32 Screws - 10 in lbs. 8-32 and 10-32 Screws -20 in. lbs. (Screws dry without grase)

GENERAL NOTES

1) All parameters at 25°C and per section unless otherwise specified.
2) Dielectric strength and insulation resistance are measured between input and output
3) Heat sinking required, for derating curves see page 3.
4) Input circuitry version incorporates active current limiter.

Copyright © 2010 Crydom Inc. Specifications subject to change without notice.

MECHANICAL SPECIFICATIONS

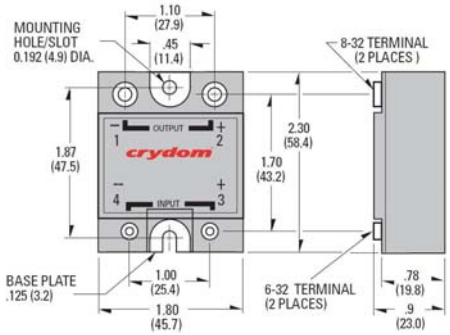

THERMAL DERATE INFORMATION

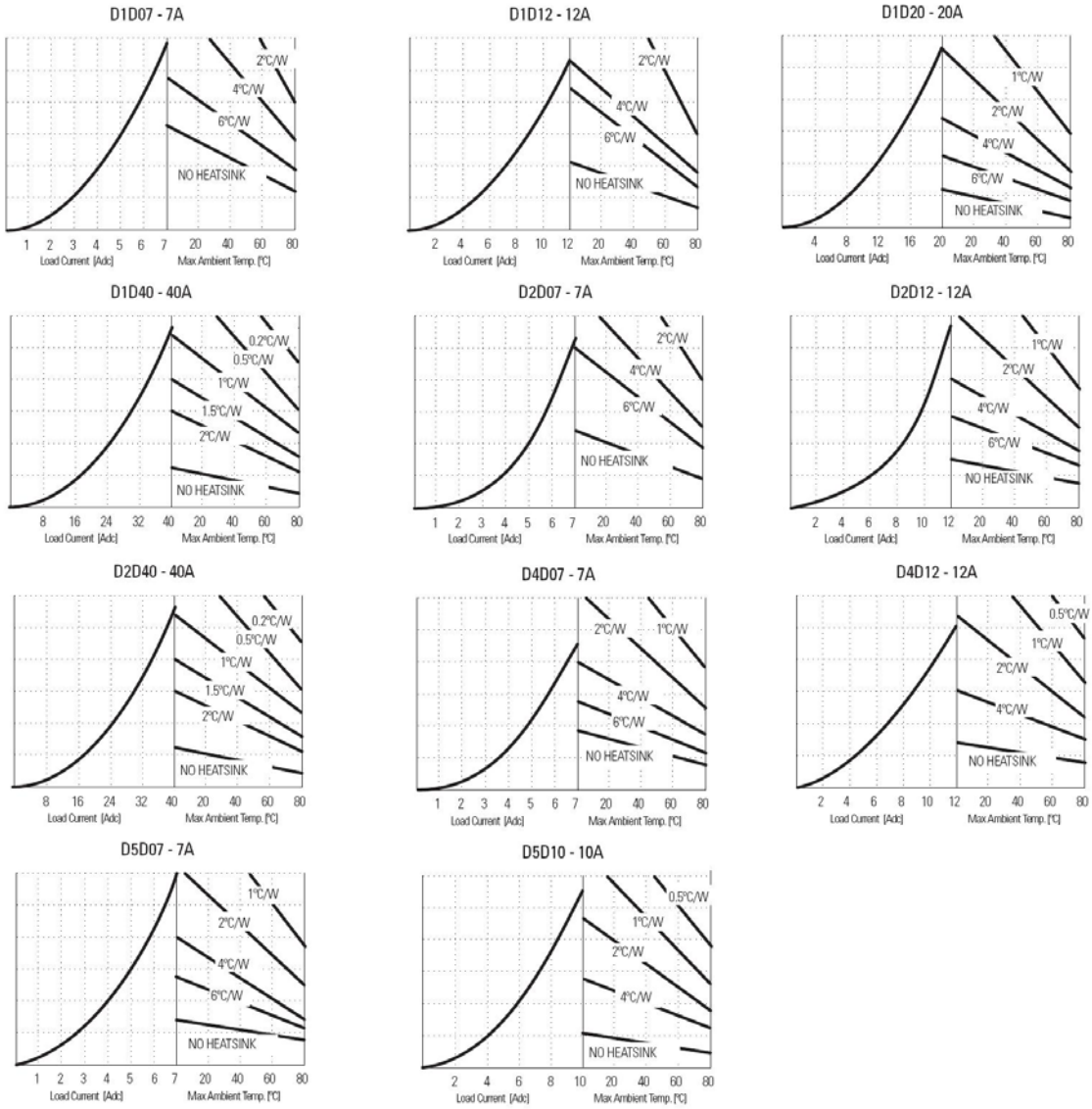

Copyright © 2010 Crydom Inc. Specifications subject to change without notice.

WIRING DIAGRAM

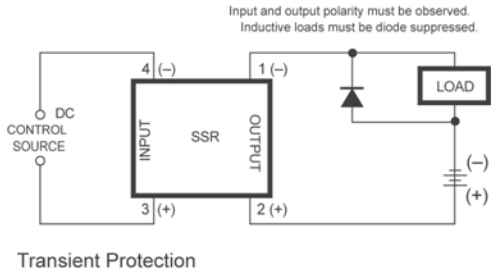

Transient Protection

MAXIMUM SURGE VS DURATION

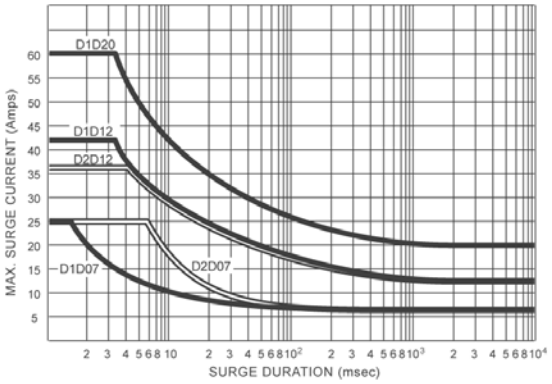

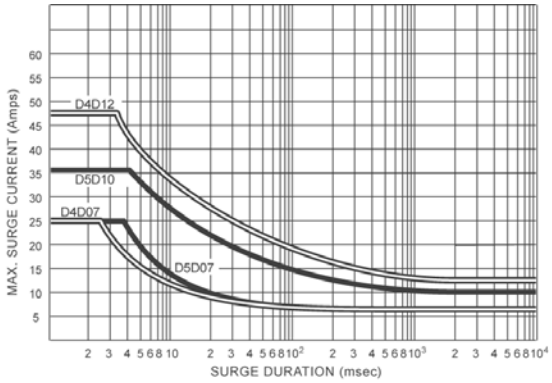

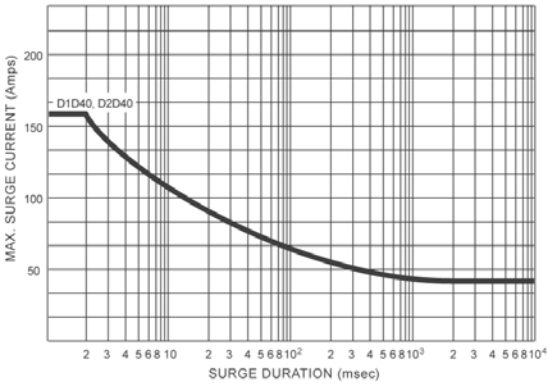

AGENCY APPROVALS

UL E116950 (100 and 200V models except D2D40L)

Rev. 112310

CE RoHS Compliant

Copyright © 2010 Crydom Inc. Specifications subject to change without notice.

⚠ DANGER / PELIGRO / DANGER /GEFAHR / PERICOLO / PERIGO

HAZARD OF ELECTRIC SHOCK, EXPLOSION, OR ARC FLASH.

- Disconnect all power before installing or working with this equipment.
- Verify all connections and replace all covers before turning on power.

Failure to follow these instructions will result in death or serious injury.

RIESGO DE DESCARGA ELECTRICA O EXPLOSION.

- Desconectar todos los suministros de energia a este equipo antes de trabajar con este equipo.
- Verificar todas las conexiones y colocar todas las tapas antes de energizer el equipo.

El incumplimiento de estas instrucciones puede provocar la muerte o lesiones serias.

RISQUE DE DESCHARGE ELECTRIQUE OU EXPLOSION

- Eteindre toutes les sources d'énergie de cet appareil avant de travailler dessus de cet appareil
- Vérifier tous connections, et remettre tous couverts en olace avant de mettre sous

De non-suivi de ces instructions provoquera la mort ou des lésions sérieuses sérieuses.

GEFAHR EINES ELEKTRISCHE N SCHLAGES ODER EINER EXPLOSION.

- Stellen Sie jeglichen Strom ab, der dieses Gerät versorgt, bevor Sie an dem Gerät Arbeiten durchführen
- Vor der Inbetriebnahme alle Anschlüsse überprüfen und alle Gehäuseteile montieren.

Unterlassung dieser Anweisungen können zum Tode oder zu schweren Verletzungen führen.

RISCHIO DI SCOSSA ELETTRICA O DELL'ESPLOSI ONE.

- Spenga tutta l'alimentazion e che fornisce questa apparecchiatu ra prima del lavorare a questa apparecchiatu ra
- Verificare tutti i collegamenti e sostituire tutte le coperture prima della rotazione sull'alimentazi one

L'omissione di seguire queste istruz ioni provocherà la morte o di lesioni serie

RISCO DE DESCARGA ELÉTTRICA OU EXPLOSÃO

- Desconectar o equipamento de toda á energia antes de instalar ou trabalhar com este equipamen to
- Verificar todas as conexões e recolocar todas as tampas antes de religar o equipamento

O não cumprimento destas instruções pode levar á morte ou lesões sérias.

⚠ WARNING / AVERTISSEMENT / WARNUNG /ADVERTENCIA / AVVERTENZA / AVISO

RISK OF MATERIAL DAMAGE AND HOT ENCLOSURE

- The product's side panels may be hot, allow the product to cool before touching.
- Follow proper mounting instructions including torque values.
- Do not allow liquids or foreign objects to enter this product.

Failure to follow these instructions can result in serious injury, or equipment damage.

RISQUE DE DOMMAGE MATERIEL ET DE SURCHAUFFE DU BOITIER

- Les panneaux latéraux du produit peuvent être chauds. Laisser le produit refroidir avant de le toucher.
- Respecter les consignes de montage, et notamment les couples de serrage.
- Ne pas laisser pénétrer de liquide ni de corps étrangers à l'intérieur du produit.

Le non-respect de cette directive peut entraîner, des lésions corporelles graves ou des dommages matériels.

GEFAHR VON MATERIALSCHÄDEN UND GEHÄUSEERHITZUNG

- Die Seitenwände können heiß sein. Lassen Sie das Produkt abkühlen, bevor Sie es berühren.
- Beachten Sie die Montageanweisungen,
- Führen Sie keine Flüssigkeiten oder Fremdkörper in das Produkt ein.

Die Nichtbeachtung dieser Anweisung kann Körperverletzung oder Materialschäden zur Folge haben.

RIESGO DE DAÑOS MATERIALES Y DE SOBRECALENTAMIENTO DE LA UNIDAD

- Los paneles laterales del producto pueden estar calientes. Esperar que el producto se enfríe antes de tocarlo.
- Respetar las instrucciones de montaje, y en particular los pares de apretado.
- No dejar que penetren líquidos o cuerpos extraños en el producto.

Si no se respetan estas precauciones pueden producirse graves lesiones, daños materiales.

RISCHIO DI DANNI MATERIALI E D'INVOLUCRO CALDO

- I pannelli laterali dell'apparecchio possono scottare; lasciar quindi raffreddare il prodotto prima di toccarlo.
- Seguire le istruzioni di montaggio corrette.
- Non far entrare liquidi o oggetti estranei in questo apparecchio.

La mancata osservanza di questa precauzione può causare gravi rischi per l'incolumità personale o danni alle apparecchiature.

RISCO DE DANO MATERIAL E DE AQUECIMENTO

- Os painéis laterais do produto podem estar quentes; dê tempo ao produto para arrefecer antes de lhe tocar.
- Siga devidamente as instruções de montagem.
- Não permita a entrada de líquidos e de objectos estranhos no produto.

A não observância destas precauções pode provocar a morte, ferimentos graves ou danos materiais.

Copyright © 2010 Crydom Inc. Specifications subject to change without notice.

ANNEX - ENVIROMENTAL INFORMATION

The environmental information disclosed in this annex including the EIP Pollution logo are in compliance with People's Republic of China Electronic Industry Standard SJ/T11364 – 2006, Marking for Control of Pollution Caused by Electronic Information Products.

Part Name	Toxic or hazardous Substance and Elements					
	Lead (Pb)	Mercury (Hg)	Cadmium (Cd)	Hexavalent Chromium (Cr (VI))	Polybrominated biphenyls (PBB)	Polybrominated diphenyl ethers (PBDE)
Semiconductor die	X	O	O	O	O	O
Solder	X	O	O	O	O	O

此附件所标示的包括电子信息产品污染图标的环保信息
符合中华人民共和国电子行业标准 SJ/T11364 - 2006,
电子信息产品污染控制标识要求

部件名称	有毒有害物质或元素					
	铅 (Pb)	汞 (Hg)	镉 (Cd)	六价铬 (Cr (VI))	多溴联苯 (PBB)	多溴二苯醚 (PBDE)
半导体芯片	X	O	O	O	O	O
焊接点	X	O	O	O	O	O

Copyright © 2010 Crydom Inc. Specifications subject to change without notice.