Encoder MR Type M, 128 - 512 CPT, 2/3 Channels, with Line Driver

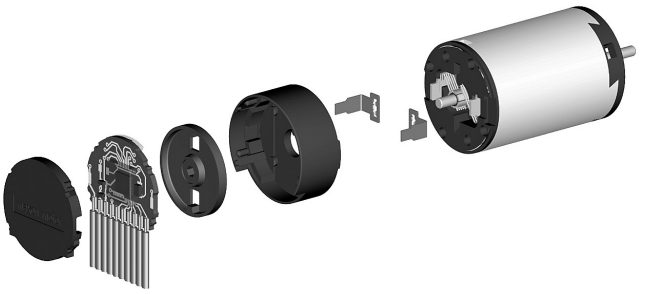

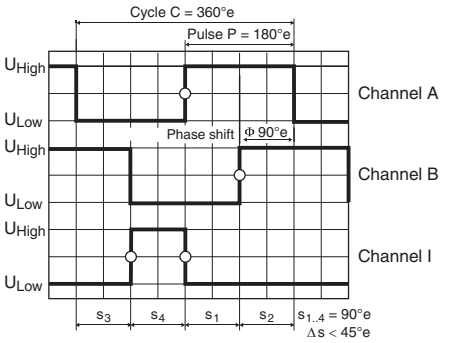

Direction of rotation cw (definition cw p. 48)

Stock program
Standard program
Special program (on request)

Order Number	228179	228177	228181	228182	201937	201940
Type						
Counts per turn	128	128	256	256	512	512
Number of channels	2	3	2	3	2	3
Max. operating frequency (kHz)	80	80	160	160	320	320
Max. speed (rpm)	37500	37500	37500	37500	37500	37500

maxon Modular System

+ Motor	Page	+ Gearhead	Page	+ Brake	Page	Overall length [mm] / ● see Gearhead					
RE 16, 2 W	72					28.0	28.0	28.0	28.0	28.0	28.0
RE 16, 2 W	72	GP 16, 0.06 - 0.18 Nm	214			●	●	●	●	●	●
RE 16, 2 W	72	GP 16, 0.1 - 0.3 Nm	215			●	●	●	●	●	●
RE 16, 3.2 W	74					45.4	45.4	45.4	45.4	45.4	45.4
RE 16, 3.2 W	74	GP 16, 0.06 - 0.18 Nm	214			●	●	●	●	●	●
RE 16, 3.2 W	74	GP 16, 0.1 - 0.3 Nm	215			●	●	●	●	●	●
RE 16, 4.5 W	76					48.4	48.4	48.4	48.4	48.4	48.4
RE 16, 4.5 W	76	GP 16, 0.06 - 0.18 Nm	214			●	●	●	●	●	●
RE 16, 4.5 W	76	GP 16, 0.1 - 0.3 Nm	215			●	●	●	●	●	●
A-max 16	90/92					30.4	30.4	30.4	30.4	30.4	30.4
A-max 16	90/92	GS 16, 0.01 - 0.1 Nm	210-212			●	●	●	●	●	●
A-max 16	90/92	GP 16, 0.06 - 0.18 Nm	214			●	●	●	●	●	●
A-max 16	90/92	GP 16, 0.1 - 0.3 Nm	215			●	●	●	●	●	●
A-max 19, 1.5 W	94					34.0	34.0	34.0	34.0	34.0	34.0
A-max 19, 1.5 W	94	GP 19, 0.1 - 0.3 Nm	217			●	●	●	●	●	●
A-max 19, 1.5 W	94	GP 22, 0.5 - 2.0 Nm	221/222			●	●	●	●	●	●
A-max 19, 1.5 W	94	GS 24, 0.1 Nm	226			●	●	●	●	●	●
A-max 19, 1.5 W	94	GP 22 S	247/248			●	●	●	●	●	●
A-max 19, 2.5 W	96					35.8	35.8	35.8	35.8	35.8	35.8
A-max 19, 2.5 W	96	GP 19, 0.1 - 0.3 Nm	217			●	●	●	●	●	●
A-max 19, 2.5 W	96	GS 20 0.06 - 0.25 Nm	218			●	●	●	●	●	●
A-max 19, 2.5 W	96	GP 22, 0.5 - 2.0 Nm	221/222			●	●	●	●	●	●
A-max 19, 2.5 W	96	GS 24, 0.1 Nm	226			●	●	●	●	●	●
A-max 19, 2.5 W	96	GP 22 S	247/248			●	●	●	●	●	●
A-max 22	98/100					36.9	36.9	36.9	36.9	36.9	36.9
A-max 22	98/100	GP 22, 0.1 - 0.6 Nm	219/220			●	●	●	●	●	●
A-max 22	98/100	GP 22, 0.5 - 2.0 Nm	221/222			●	●	●	●	●	●
A-max 22	98/100	GS 24, 0.1 Nm	226			●	●	●	●	●	●
A-max 22	98/100	GP 22 S	247/248			●	●	●	●	●	●
RE-max 17	120/122					30.4	30.4	30.4	30.4	30.4	30.4
RE-max 17	120/122	GP 16, 0.06 - 0.18 Nm	214			●	●	●	●	●	●
RE-max 17	120/122	GP 16, 0.1 - 0.3 Nm	215			●	●	●	●	●	●

Technical Data

Supply voltage V_{CC}	5 V ± 5%
Output signal	TTL compatible
Phase shift Φ	90°e ± 45°e
Index pulse width	90°e ± 45°e
Operating temperature range	-25 ... +85°C
Moment of inertia of code wheel	≤ 0.09 gcm²
Output current per channel	max. 5 mA

The index signal I is synchronised with channel A or B.

Pin Allocation

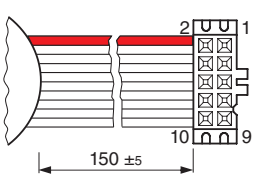

1 Motor +
2 V_{CC}
3 GND
4 Motor –
5 Channel $\overline{A}$
6 Channel A
7 Channel $\overline{B}$
8 Channel B
9* Channel $\overline{I}$ (Index)
10* Channel I (Index)

DIN Connector 41651
flat band cable AWG 28
*version with 3 channels

Connection example

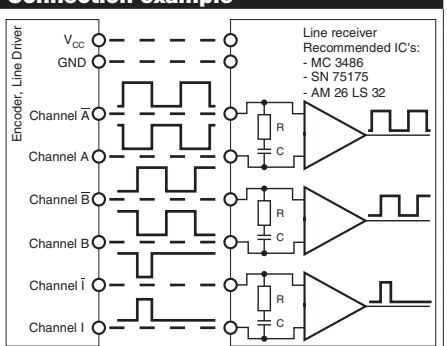

Terminal resistance R = typical 120 Ω
Capacitor C ≥ 0.1 nF per m line length

Encoder MR Type M, 128 - 512 CPT, 2/3 Channels, with Line Driver

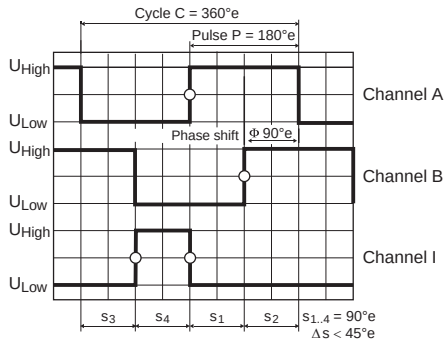

Direction of rotation cw (definition cw p. 48)

Stock program
Standard program
Special program (on request)

Order Number	228179	228177	228181	228182	201937	201940
Type						
Counts per turn	128	128	256	256	512	512
Number of channels	2	3	2	3	2	3
Max. operating frequency (kHz)	80	80	160	160	320	320
Max. speed (rpm)	37500	37500	37500	37500	37500	37500

maxon Modular System

+ Motor	Page	+ Gearhead	Page	+ Brake	Page	Overall length [mm] / ● see Gearhead					
RE-max 21, 3.5 W	124					34.0	34.0	34.0	34.0	34.0	34.0
RE-max 21, 3.5 W	124	GP 22, 0.5 - 2.0 Nm	221/222			●	●	●	●	●	●
RE-max 21, 3.5 W	124	GS 38, 0.1 - 0.6 Nm	236			●	●	●	●	●	●
RE-max 21, 3.5 W	124	GP 22 S	247/248			●	●	●	●	●	●
RE-max 21, 6 W	126					35.8	35.8	35.8	35.8	35.8	35.8
RE-max 21, 6 W	126	GP 22, 0.5 - 2.0 Nm	221/222			●	●	●	●	●	●
RE-max 21, 6 W	126	GS 38, 0.1 - 0.6 Nm	236			●	●	●	●	●	●
RE-max 21, 6 W	126	GP 22 S	247/248			●	●	●	●	●	●
RE-max 24	128/130					36.9	36.9	36.9	36.9	36.9	36.9
RE-max 24	128/130	GP 22, 0.5 - 2.0 Nm	222			●	●	●	●	●	●
RE-max 24	128/130	GS 38, 0.1 - 0.6 Nm	236			●	●	●	●	●	●
RE-max 24	128/130	GP 22 S	247/248			●	●	●	●	●	●
EC 16, 30 W	145					50.7	50.7	50.7	50.7	50.7	50.7
EC 16, 30 W	145	GP 16, 0.1 - 0.3 Nm	215			●	●	●	●	●	●
EC 16, 30 W	145	GP 22, 0.5 - 1.0 Nm	221			●	●	●	●	●	●
EC 16, 60 W	147					66.7	66.7	66.7	66.7	66.7	66.7
EC 16, 60 W	147	GP 22, 0.5 - 1.0 Nm	221			●	●	●	●	●	●
EC 16, 60 W	147	GP 22 S	247/248			●	●	●	●	●	●
EC 16, 60 W	147	GP 22, 0.5 - 2.0 Nm	223			●	●	●	●	●	●
EC 22, 40 W	149					50.5	50.5	50.5	50.5	50.5	50.5
EC 22, 40 W	149	GP 22, 0.5 - 3.4 Nm	223/224			●	●	●	●	●	●
EC 22, 40 W	149	GP 22 S	247/248			●	●	●	●	●	●
EC 22, 100 W	151					68.7	68.7	68.7	68.7	68.7	68.7
EC 22, 100 W	151	GP 22, 0.5 - 3.4 Nm	223/224			●	●	●	●	●	●
EC 22, 100 W	151	GP 22 S	247/248			●	●	●	●	●	●
EC-max 16, 5 W	161					31.3	31.3	31.3	31.3	31.3	31.3
EC-max 16, 5 W	161	GP 16, 0.1 - 0.3 Nm	215			●	●	●	●	●	●
EC-max 16, 8 W	163					43.3	43.3	43.3	43.3	43.3	43.3
EC-max 16, 8 W	163	GP 22, 0.5 - 2.0 Nm	223			●	●	●	●	●	●
EC-max 16, 8 W	163	GP 22 S	247/248			●	●	●	●	●	●
EC-max 22, 12 W	164					41.7	41.7	41.7	41.7	41.7	41.7
EC-max 22, 12 W	164	GP 22, 0.5 - 2.0 Nm	223/224			●	●	●	●	●	●
EC-max 22, 12 W	164	KD 32, 1.0 - 4.5 Nm	235			●	●	●	●	●	●
EC-max 22, 12 W	164	GP 22 S	247/248			●	●	●	●	●	●
EC-max 22, 25 W	165					58.2	58.2	58.2	58.2	58.2	58.2
EC-max 22, 25 W	165	GP 22, 2.0 - 3.4	224			●	●	●	●	●	●
EC-max 22, 25 W	165	GP 32, 1 - 6 Nm	233			●	●	●	●	●	●
EC-max 22, 25 W	165	GP 32 S	247/248			●	●	●	●	●	●

Technical Data

Supply voltage V_{CC}	5 V ± 5%
Output signal	TTL compatible
Phase shift Φ	90°e ± 45°e
Index pulse width	90°e ± 45°e
Operating temperature range	-25 ... +85°C
Moment of inertia of code wheel	≤ 0.09 gcm²
Output current per channel	max. 5 mA

The index signal I is synchronised with channel A or B.

Pin Allocation

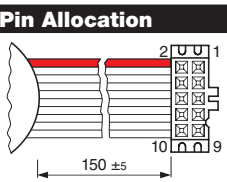

MR Encoder EC-max 16 / EC-max 22

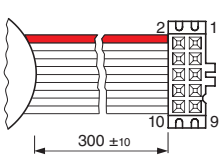

MR Encoder EC 16 / EC 22

1 N.C.
2 V_{CC}
3 GND
4 N.C.
5 Channel $\overline{A}$
6 Channel A
7 Channel $\overline{B}$
8 Channel B
9* Channel $\overline{I}$ (Index)
10* Channel I (Index)

DIN Connector 41651
flat band cable AWG 28
*version with 3 channels

Pin assignment
for RE-max see
Page 260

Connection example

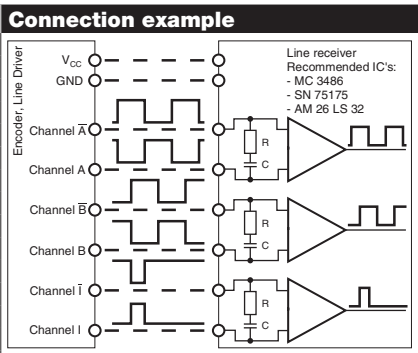

Terminal resistance R = typical 120 Ω
Capacitor C ≥ 0.1 nF per m line length