DATE OF ISSUE : 2009. 08. 27

SPECIFICATION

MODEL : SPMWHT520AN2BAA0S0

Approved rank : V_F(A1, A2, A3, A4), CIE(A1, A2, A3, A4), I_V(S0)

WHITE LED A0 RANK

CUSTOMER :	
CHECKED	APPROVED

SAMSUNG LED			
DRAWN	CHECKED		APPROVED
	영업	품질	

SAMSUNG LED CO., LTD.
314. MAETAN 3-DONG, YEONGTONG-GU,
SUWON-SI,GYEONGGI-DO,KOREA,443-743

Contents

1. Product Outline ---------- 3
2. Absolute Maximum Rating ---------- 3
3. Characteristics ---------- 3
4. Chromaticity Diagram ---------- 4
5. Typical Characteristic Graph ---------- 5
6. Outline Drawing & Dimension ---------- 6
7. Reliability Test Items & Conditions ---------- 7
8. Solder Conditions ---------- 8
9. Taping Dimension ---------- 9
10. Label Structure ---------- 10
11. Lot Number ---------- 10
12. Reel Packing Structure ---------- 11
13. Aluminum Packing Bag ---------- 12
14. Precaution For Use ---------- 13
15. Hazard Substance Analysis ---------- 15
16. Revision history ---------- 19

1. Product Outline

1) Feature

. Lead Frame Type LED Package (5.2 * 6.0 * t 1.3 mm)

. Beam Angle (△θ : 120 ˚)

. AlGaInP, GaN/Al_2O_3 Chip & Long Time Reliability

2) Applications

. Indoor, Outdoor Display and etc.

2. Absolute Maximum Rating

1). Operation Forward Current Per Chip..... 60 ㎃

2). Peak Pulsed Forward Current Per Chip..... 200 ㎃

(Duty 1/10 Pulse Width 10 ㎳)

3). Reverse Current..... 85 ㎃

4). Operating Temperature Range (T_{opr}) ..... - 30 ℃ ~ 85 ℃

5). Storage Temperature Range (T_{stg}) ..... - 40 ℃ ~100 ℃

3. Characteristics

Electrical/ Optical Characteristics

(Ta : 25 ℃)

Item	Symbol	Conditions	Rank		Min.	Typ.	Max.	Unit
Forward Voltage (*)	V_F	I_F = 100 ㎃	BA	A1	3.0	-	3.1	V
				A2	3.1	-	3.2	
				A3	3.2	-	3.3	
				A4	3.3	-	3.4	
Reverse Voltage	V_r	I_R = 10 ㎃	-		0.6	-	2.0	V

Chromaticity Coordinate

(Ta : 25 ℃)

Condition	Rank		Model Name	x				y			
I_F = 100 ㎃	A0	A1	SPMWHT520AN2BAA1S0	0.2771	0.2869	0.2833	0.2725	0.2507	0.2698	0.2763	0.2564
		A2	SPMWHT520AN2BAA2S0	0.2869	0.2976	0.2951	0.2833	0.2698	0.2906	0.2981	0.2763
		A3	SPMWHT520AN2BAA3S0	0.2725	0.2833	0.2799	0.2684	0.2564	0.2763	0.2826	0.2615
		A4	SPMWHT520AN2BAA4S0	0.2833	0.2951	0.2926	0.2799	0.2763	0.2981	0.3057	0.2826

Luminous Intensity

(Ta : 25 ℃)

Symbol	Conditions	Rank	Min.	Typ.	Max.	Unit
I_V	I_F = 100 ㎃	S0	7.5	10.0	11.5	cd

* Tolerance : V_F:± 0.1 V, I_V:± 5 %, x,y:± 0.01

* Luminous Intensity measuring equipment : CAS140CT

4. Chromaticity Diagram

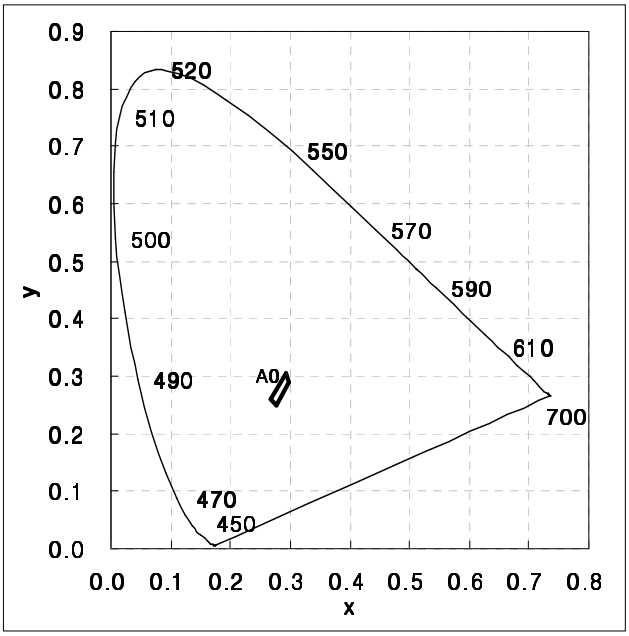

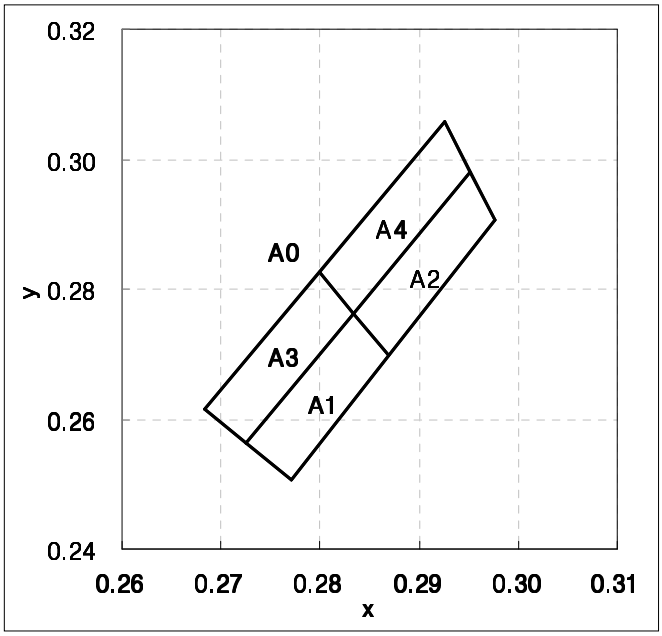

* A0 = A1+A2+A3+A4

V_F	CIE	I_V
A1, A2, A3, A4	A1, A2, A3, A4	S0

* Each reel contains only one of the A1, A2, A3 or A4, a segment (1/4) of the V_F rank.

* Each reel contains only one of the A1, A2, A3 or A4, a segment (1/4) of the CIE rank.

5. Typical Characteristics Graph

**** These graphs show typical values.***

(Ta : 25 ℃)

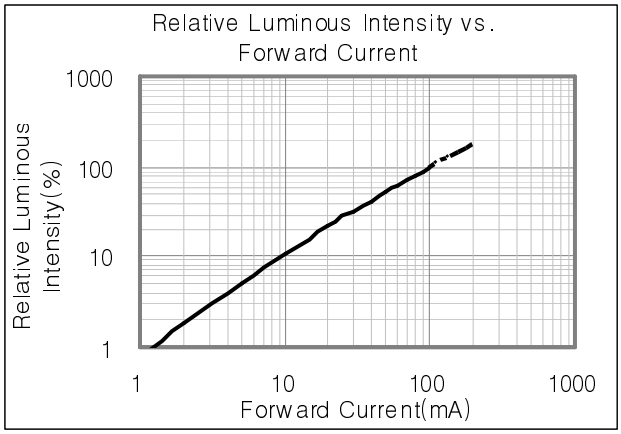

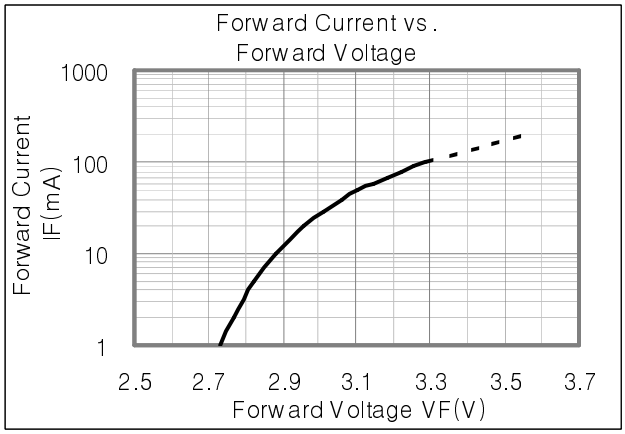

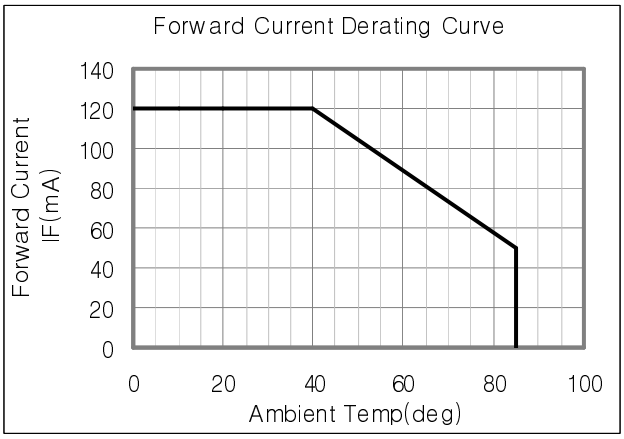

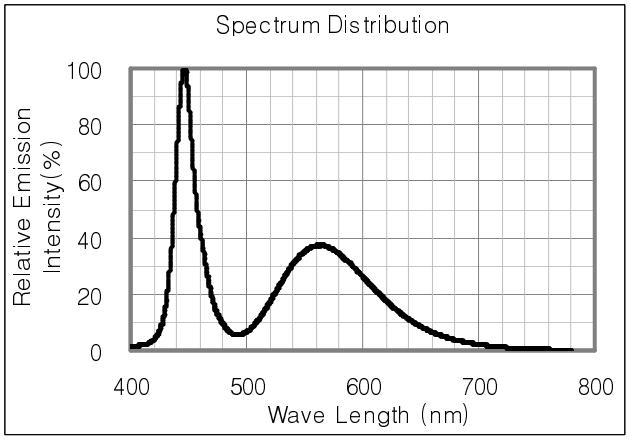

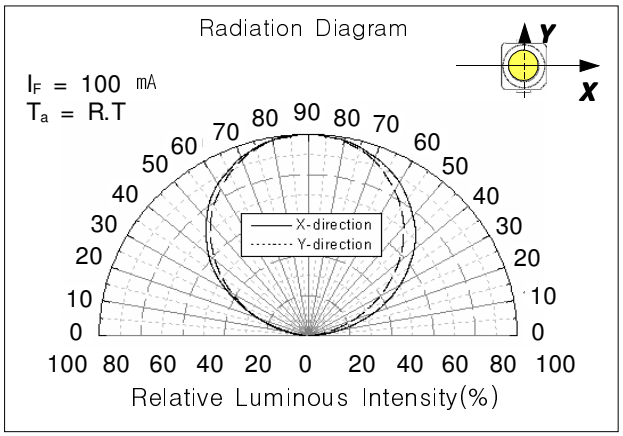

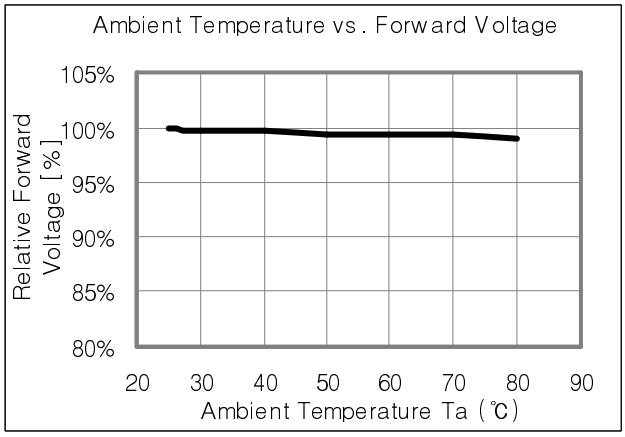

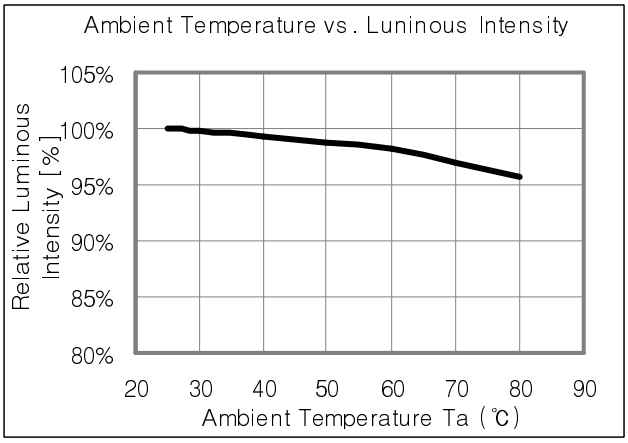

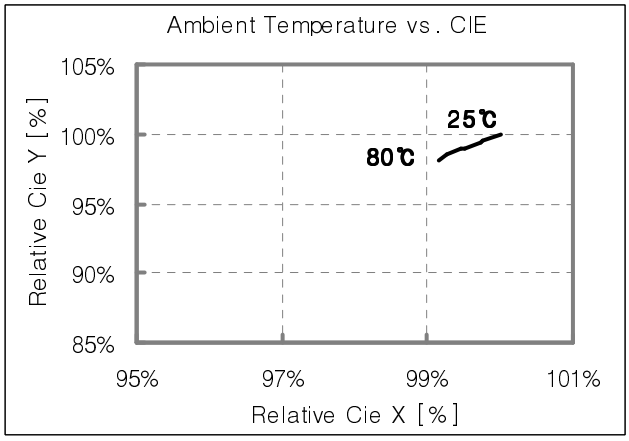

6. LED Package Outline Dimensions

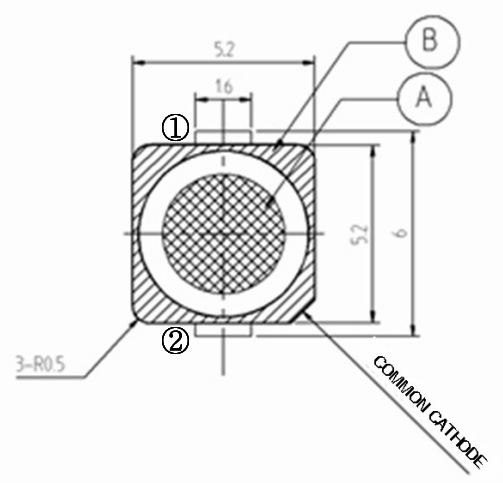

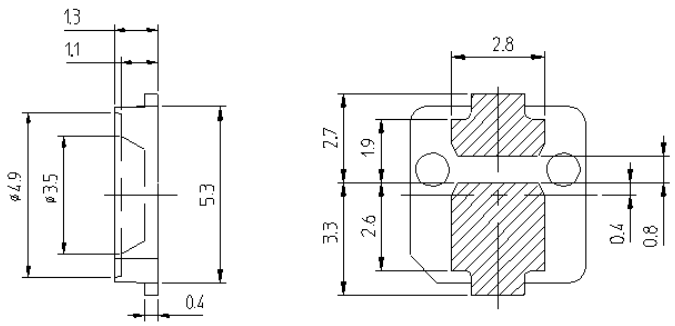

1. Tolerance is ±0.1mm.
2. Do not place pressure on the encapsulating resin ("A").
3. The maximum compressing force is 15N on the polymer("B").

① Anode

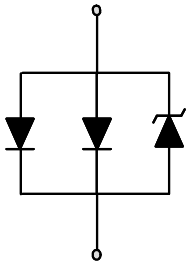

② Cathode

Circuit Diagram

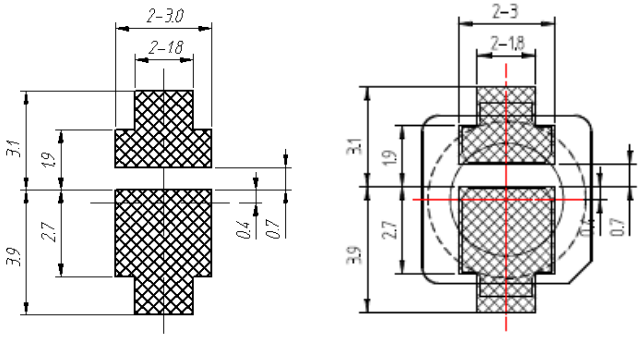

Land Pattern

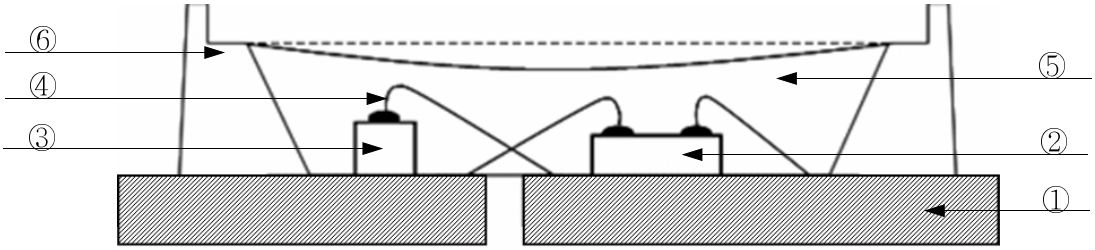

NUMBER	ITEM	MATERIAL
①	FRAME	Copper Frame(Silver Plated)
②	LED CHIP	GaN/ Al_2O_3
③	Zener Diode	Si
④	WIRE	Gold Wire
⑤	RESIN	Silicone + Phosphor
⑥	PACKAGE	Heat- resistant Polymer

7. Reliability Test Items and Conditions

1) Test Items

Test Item	Test Conditions	Test Hours/Cycles	Sample No
Room Temperature life test	25 ℃± 3 ℃, DC120 ㎃	500 hrs	50
High Temperature humidity life test	60 ℃± 3 ℃, 95 %± 2 %RH, DC90 ㎃	500 hrs	50
High Temperature life test	85 ℃± 3 ℃, DC50 ㎃	500 hrs	50
Low Temperature life test	- 30 ℃± 3 ℃, DC120 ㎃	500 hrs	50
High Temperature Storage	Ta=100 ℃± 3 ℃	500 hrs	22
Low Temperature Storage	Ta=- 40 ℃± 3 ℃	500 hrs	22
High Temperature humidity Storage	60 ℃± 3 ℃, 95 %± 2 %RH	500 hrs	22
Thermal Shock	- 40 ℃ ~ 100 ℃ 0.5 hrs 0.5 hrs	100 cycles	50
Temperature humidity Cycle	25 ℃ ~ 65 ℃ ~ - 10 ℃ 24 hrs/1 cycle, 95 %RH	10 cycles	22
Reflow (Pb- Free)	Peak 260± 5 ℃ for 10 sec	3 times	22
ESD(HBM)	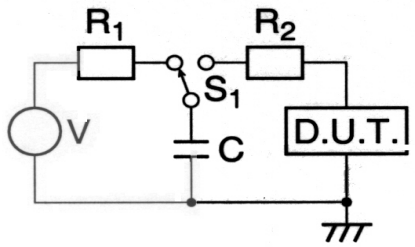 - R1:10 ㏁ , R2:1.5 ㎏Ω , C:100 ㎊	5 times	5
On/Off test	50 ℃± 3 ℃, 95 %± 2 %RH, DC120 ㎃, On/2 sec, Off/2 sec	108000 cycles	50

2) Criteria for Judging the Damage

Item	Symbol	Test Condition	Limit	
			Min	Max
Forward Voltage	V_F	I_F = 100 ㎃	-	U.S.L.*1.2
Luminous Intensity	I_V	I_F = 100 ㎃	L.S.L.*0.5	-

* USL : Upper Standard Level LSL : Lower Standard Level

8. Solder Conditions

1) Reflow Conditions (Pb Free)

Reflow Frequency : 2 times max.

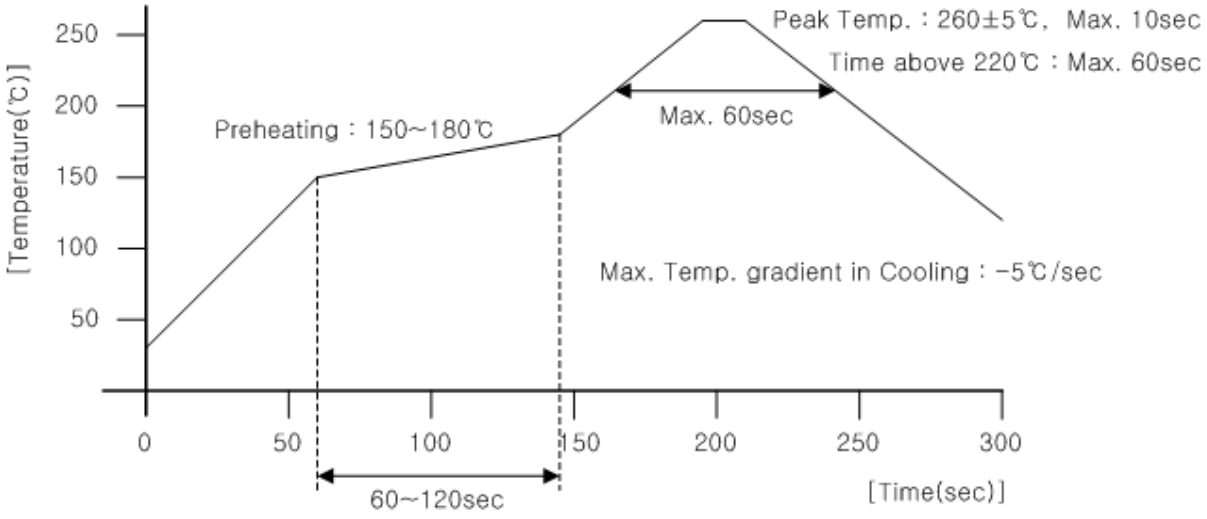

2) For Manual Soldering

Not more than 5 seconds @MAX300 ℃, under soldering iron.

9. Taping Dimension

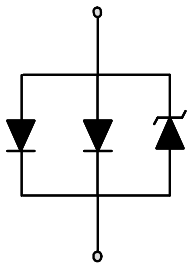

Polarity

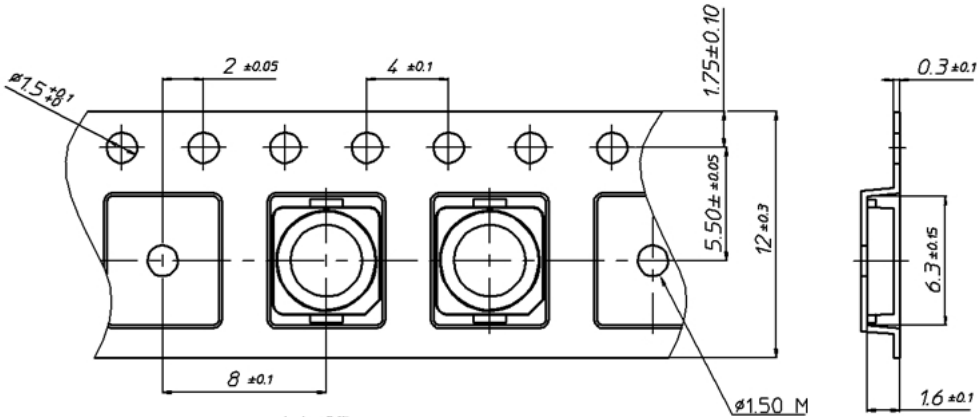

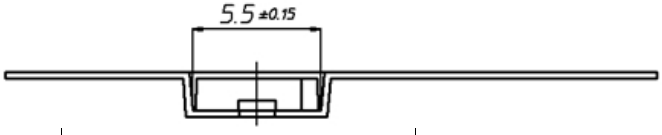

End | Start

More than 40 ㎜ Unloaded tape	Mounted with Flash LED	More than (100~200)㎜ Unloaded tape	Leading part more than (200~400)㎜

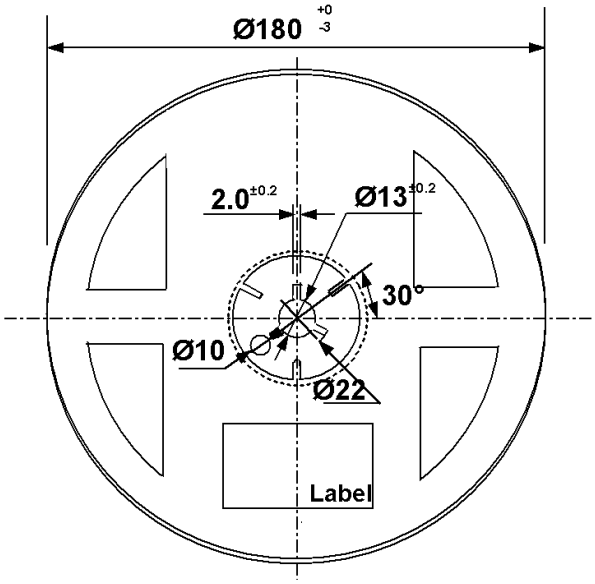

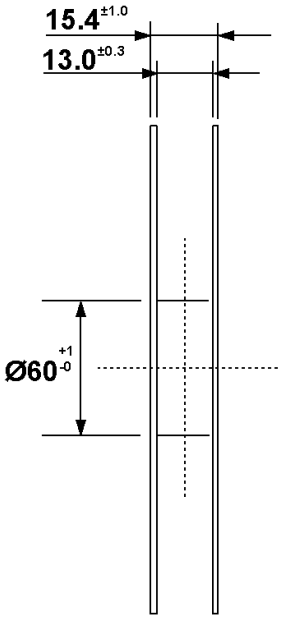

Tolerance ±0.2 , Unit:mm

(1) Quantity : The quantity/reel to be 1000 pcs.

(2) Cumulative Tolerance : Cumulative tolerance/10 pitches to be ±0.2 ㎜

(3) Adhesion Strength of Cover Tape : Adhesion strength to be 0.1- 0.7 N when the cover tape is turned off from the carrier tape at 10 ℃ angle to be the carrier tape.

(4) Packaging : P/N, Manufacturing data code no. and quantity to be indicated on a damp proof package.

10. Label Structure

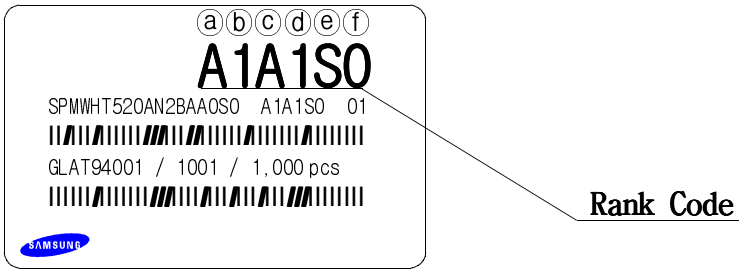

N.B) Denoted rank is the only example.

Rank Code

ⓐⓑ : Forward Voltage(V_F) Rank (refer to page. 3)

ⓒⓓ : Chromaticity Coordinate Rank (refer to page. 3)

ⓔⓕ : Luminous Intensity(I_V) Rank (refer to page. 3)

11. Lot Number

The Lot number is composed of the following characters

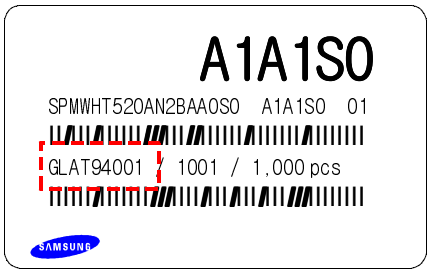

①②③④⑤⑥⑦⑧⑨ / 1ⓐⓑⓒ / 1,000 PCS

① : Production Site (S:SAMSUNG LED, G:GOSIN CHINA)

② : L (LED)

③ : Product State (A:Normality, B:Bulk, C:First Production, R:Reproduction, S:Sample)

④ : Year (T:2009, U:2010, V:2011…)

⑤ : Month (1 ~ 9, A, B)

⑥ : Day (1 ~ 9, A, B ~ V)

⑦⑧⑨ : SAMSUNG LED Product number (1 ~ 999)

ⓐⓑⓒ : Reel Number (1 ~ 999)

12. Reel Packing Structure

Reel

A1A1S0
SPMWHT520AN2BAA0S0 A1A1S0 01
GLAT94001 / 1001 / 1,000 pcs

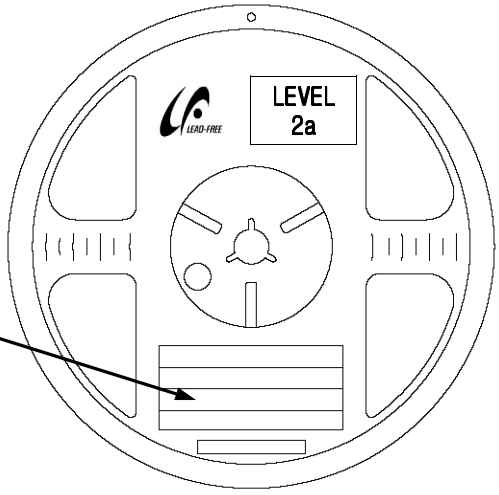

Aluminum Vinyl Bag

A1A1S0
SPMWHT520AN2BAA0S0 A1A1S0 01
GLAT94001 / 1001 / 1,000 pcs

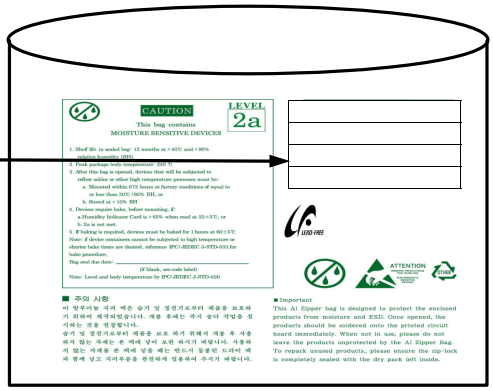

Material : Paper(SW3B(B))

TYPE	SIZE(mm)		
	L	W	H
7inch	245	220	182

① SIDE

A1A1S0
SPMWHT520AN2BAA0S0 A1A1S0 01
GLAT94001 / 1001 / 10,000 pcs

[Box Label]

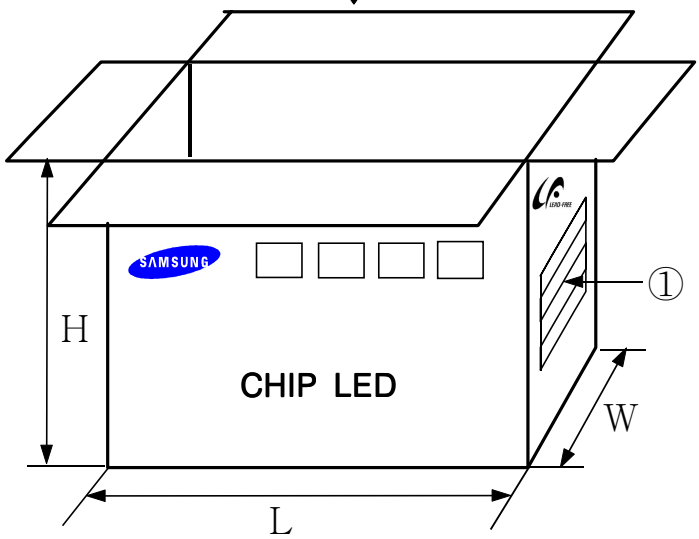

13. Aluminum Vinyl Bag

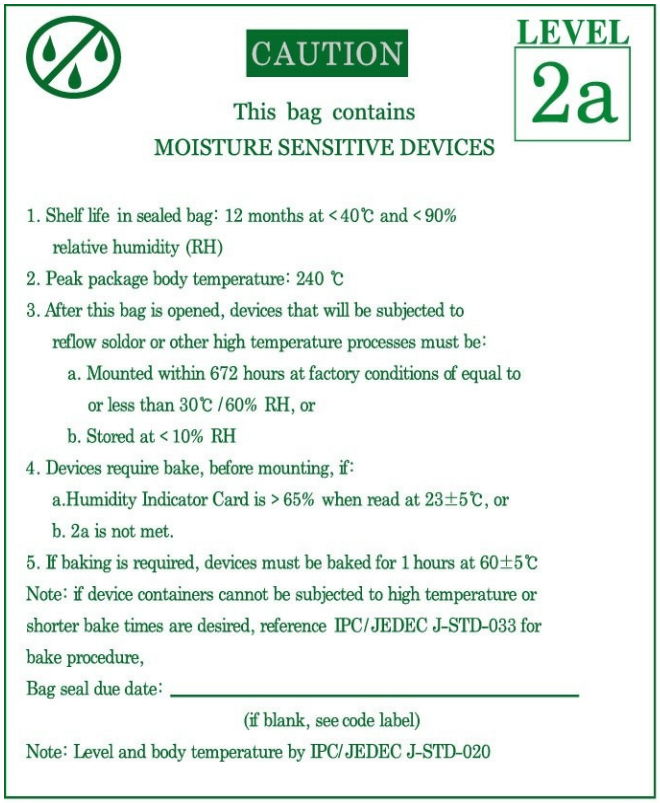

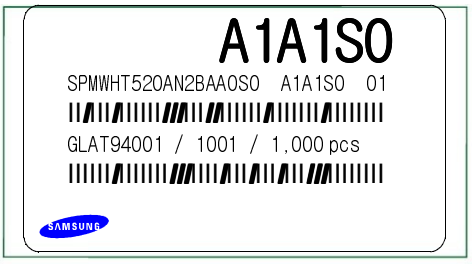

■ 주의 사항

이 알루미늄 지퍼 백은 습기 및 정전기로부터 제품을 보호하기 위하여 제작되었습니다. 개봉 후에는 즉시 솔더 작업을 실시하는 것을 권장합니다.

습기 및 정전기로부터 제품을 보호 하기 위해서 개봉 후 사용하지 않는 자재는 본 팩에 넣어 보관 하시기 바랍니다. 사용하지 않는 자재를 본 팩에 넣을 때는 반드시 동봉된 드라이 팩과 함께 넣고 지퍼부분을 완전하게 밀봉하여 주시기 바랍니다.

■ Important

This Al Zipper bag is designed to protect the enclosed products from moisture and ESD. Once opened, the products should be soldered onto the printed circuit board immediately. When not in use, please do not leave the products unprotected by the Al Zipper Bag. To repack unused products., please ensure the zip-lock is completely sealed with the dry pack left inside.

Silica gel & Humidity Indicator Card in Aluminum Vinyl Bag

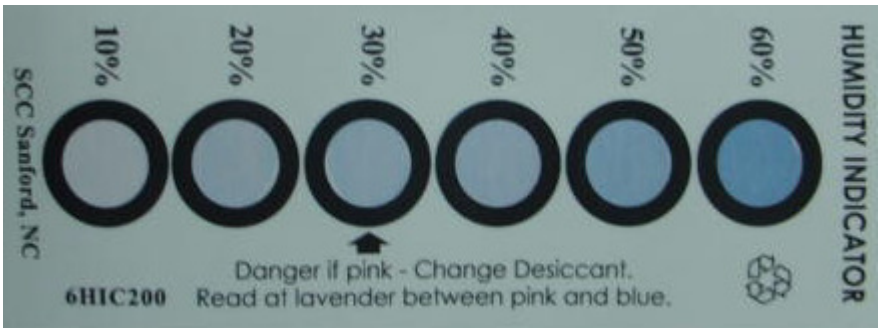

14. Precaution for Use (취급상 주의사항)

1) For over-current-proof function, customers are recommended to apply resistors to prevent sudden change of the current caused by slight shift of the voltage.
과전류 방지를 위해 전압의 미세한 이동에 의해 야기되는 전류의 순간 변화를 방지하기 위해 저항 등의 설치를 권장함.

2) This device should not be used in any type of fluid such as water, oil, organic solvent, etc. When washing is required, IPA is recommended to use.
제품은 물, 오일, 유기물과 같은 액체 타입에서의 사용은 제한되며, 세정이 필요할 시에는 IPA 사용을 권장함.

3) When the LEDs illuminate, operating current should be decided after considering the ambient maximum temperature.
LED의 발광 시, 동작 전류는 주변 최고온도를 고려하여 결정되어야 함.

4) LEDs must be stored in a clean environment.
If the LEDs are to be stored for 3 months or more after being shipped from SLED, they should be packed by a sealed container with nitrogen gas injected.
(Shelf life of sealed bags: 12 months, temp. 0~40 ℃, 20~70 %RH)
LED의 보관은 청정한 환경에서 보존되어져야 하며, 만약 삼성LED로부터 공급받는 후 3개월 또는 그 이상 보관이 필요하다면 질소 가스를 동봉한 보존용기에 보관되어야 함.
(보존 bag의 수명 : 12 개월, 보존 온도 0~40 ℃, 습도 20~70 %RH)

5) After storage bag is open, device subjected to soldering, solder reflow, or other high temperature processes must be:
보존 Bag이 개봉된 후에, 납땜이나 reflow등의 높은 온도에 노출되는 제품은 다음의 사항에 부합되어야 함.
a. Mounted within 168 hours (7 days) at an assembly line with a condition of no more than 30 ℃/60 %RH,
a. 제품은 30 ℃/60 %RH보다 같거나 낮은 조립조건에서 168시간(7일)이내에 조립해야 함.
b. Stored at <10 %RH.
b. 10 % 이하의 상대습도에서 보관되어야 함.

6) Repack unused Products with anti-moisture packing, fold to close any opening and then store in a dry place.
사용하지 않은 제품은 방습팩에 넣어 개봉 부위를 닫아서 다시 포장한 후, 건조한 장소에서 보관할 것을 권장함.

7) Devices require baking before mounting, if humidity card reading is >60 % at 23± 5 ℃.
만약 습도표시카드의 수치가 23± 5 ℃에서 60 % 이상이라면, 제품 실장 전에 baking하여야 함.

8) Devices must be baked for 24 hours at 65± 5 ℃, if baking is required.
만약 baking이 필요하다면, 제품은 65± 5 ℃에서 24시간 정도 baking 되어야 함.

9) The LEDs are sensitive to the static electricity and surge. It is recommended to use a wrist band or anti- electrostatic glove when handling the LEDs.
LED는 정전기 및 서지에 민감한 제품이므로, LED 제품을 다룰 시에는 정전기 방지장갑이나 손목밴드를 사용하기를 권장함.

If voltage exceeding the absolute maximum rating is applied to LEDs, it may cause damage or even destruction to LED devices.
만약 절대 허용치를 초과하는 전압이 LED에 가해지면, LED 소자는 파괴되거나 손상될 수 있음.

Damaged LEDs may show some unusual characteristics such as increase in leak current, lowered turn- on voltage, or abnormal lighting of LEDs at low current.
손상된 제품은 누설전류의 증가, Turn on 전압의 저하, 저 전류에서의 점등불량 등의 이상 거동을 보일 수 있음.

15. Hazard Substance Analysis

SGS

Test Report No. F690501/LF-CTSAYAA09-19728 Issued Date: July 15, 2009 Page 1 of 4

To: **SAMSUNG LED CO.,LTD.**
314,Maetan-dong
Yeongtong-gu
Suwon-city
GYEONGGI-DO
Korea

The following merchandise was submitted and identified by the client as :

Product Name	: LED
SGS File No.	: AYAA09-19728
Received Date	: July 08, 2009
Test Performing Date	: July 09, 2009
Test Performed	: SGS Testing Korea tested the sample(s) selected by applicant with following results
Test Results	: For further details, please refer to following page(s)
Comments	: By the applicant's specific request, the sampling and testing was performed only for the part indicated in the photo without disassembly.

SGS Testing Korea Co. Ltd.

Pluto Kim
Cindy Park
Jinee Song/ Testing Person

Jeff Jang / Chemical Lab Mgr

This document is issued by the Company subject to its General Conditions of Service printed overleaf, available on request or accessible at www.sgs.com/terms_and_conditions.htm and, for electronic format documents, subject to Terms and Conditions for Electronic Documents at www.sgs.com/terms_e-document.htm. Attention is drawn to the limitation of liability, indemnification and jurisdiction issues defined therein. Any holder of this document is advised that information contained hereon reflects the Company's findings at the time of its intervention only and within the limits of Client's instructions, if any. The Company's sole responsibility is to its Client and this document does not exonerate parties to a transaction from exercising all their rights and obligations under the transaction documents. This document cannot be reproduced except in full, without prior written approval of the Company. Any unauthorized alteration, forgery or falsification of the content or appearance of this document is unlawful and offenders may be prosecuted to the fullest extent of the law.
Unless otherwise stated the results shown in this test report refer only to the sample(s) tested and such sample(s) are retained for 180 days only.

F052 Version3

SGS Testing Korea Co.,Ltd.
322, The O valley, 555-9, Hogye-dong, Dongan-gu, Anyang-si, Gyeonggi-do, Korea 431-080
t +82 (0)31 4608 000 f +82 (0)31 4608 059 http://www.sgslab.co.kr ,www.kr.sgs.com/greenlab

Member of the SGS Group (Société Générale de Surveillance)

SGS

Test Report No. F690501/LF-CTSAYAA09-19728 Issued Date: July 15, 2009 Page 2 of 4

Sample No. : AYAA09-19728.001

Sample Description : LED

Item No./Part No. : 5252 White

Heavy Metals

Test Items	Unit	Test Method	MDL	Results
Cadmium (Cd)	mg/kg	With reference to IEC 62321:2008, ICP	0.5	N.D.
Lead (Pb)	mg/kg	With reference to IEC 62321:2008, ICP	5	N.D.
Mercury (Hg)	mg/kg	With reference to IEC 62321:2008, ICP	2	N.D.
Hexavalent Chromium (Cr VI)	mg/kg	With reference to IEC 62321:2008, UV-VIS	1	N.D.

Flame Retardants-PBBs/PBDEs

Test Items	Unit	Test Method	MDL	Results
Monobromobiphenyl	mg/kg	With reference to IEC 62321:2008, GC-MS	5	N.D.
Dibromobiphenyl	mg/kg	With reference to IEC 62321:2008, GC-MS	5	N.D.
Tribromobiphenyl	mg/kg	With reference to IEC 62321:2008, GC-MS	5	N.D.
Tetrabromobiphenyl	mg/kg	With reference to IEC 62321:2008, GC-MS	5	N.D.
Pentabromobiphenyl	mg/kg	With reference to IEC 62321:2008, GC-MS	5	N.D.
Hexabromobiphenyl	mg/kg	With reference to IEC 62321:2008, GC-MS	5	N.D.
Heptabromobiphenyl	mg/kg	With reference to IEC 62321:2008, GC-MS	5	N.D.
Octabromobiphenyl	mg/kg	With reference to IEC 62321:2008, GC-MS	5	N.D.
Nonabromobiphenyl	mg/kg	With reference to IEC 62321:2008, GC-MS	5	N.D.
Decabromobiphenyl	mg/kg	With reference to IEC 62321:2008, GC-MS	5	N.D.
Monobromodiphenyl ether	mg/kg	With reference to IEC 62321:2008, GC-MS	5	N.D.
Dibromodiphenyl ether	mg/kg	With reference to IEC 62321:2008, GC-MS	5	N.D.
Tribromodiphenyl ether	mg/kg	With reference to IEC 62321:2008, GC-MS	5	N.D.
Tetrabromodiphenyl ether	mg/kg	With reference to IEC 62321:2008, GC-MS	5	N.D.
Pentabromodiphenyl ether	mg/kg	With reference to IEC 62321:2008, GC-MS	5	N.D.
Hexabromodiphenyl ether	mg/kg	With reference to IEC 62321:2008, GC-MS	5	N.D.
Heptabromodiphenyl ether	mg/kg	With reference to IEC 62321:2008, GC-MS	5	N.D.
Octabromodiphenyl ether	mg/kg	With reference to IEC 62321:2008, GC-MS	5	N.D.
Nonabromodiphenyl ether	mg/kg	With reference to IEC 62321:2008, GC-MS	5	N.D.
Decabromodiphenyl ether	mg/kg	With reference to IEC 62321:2008, GC-MS	5	N.D.

NOTE:
(1) N.D. = Not detected.(<MDL)
(2) mg/kg = ppm
(3) MDL = Method Detection Limit
(4) - = No regulation
(5) ** = Qualitative analysis (No Unit)
(6) * = Boiling-water-extraction:
Negative = Absence of CrVI coating
Positive = Presence of CrVI coating; the detected concentration in boiling-water-extraction solution is equal or greater than 0.02 mg/kg with 50 cm2 sample surface area.

This document is issued by the Company subject to its General Conditions of Service printed overleaf, available on request or accessible at www.sgs.com/terms_and_conditions.htm and, for electronic format documents, subject to Terms and Conditions for Electronic Documents at www.sgs.com/terms_e-document.htm. Attention is drawn to the limitation of liability, indemnification and jurisdiction issues defined therein. Any holder of this document is advised that information contained hereon reflects the Company's findings at the time of its intervention only and within the limits of Client's instructions, if any. The Company's sole responsibility is to its Client and this document does not exonerate parties to a transaction from exercising all their rights and obligations under the transaction documents. This document cannot be reproduced except in full, without prior written approval of the Company. Any unauthorized alteration, forgery or falsification of the content or appearance of this document is unlawful and offenders may be prosecuted to the fullest extent of the law.
Unless otherwise stated the results shown in this test report refer only to the sample(s) tested and such sample(s) are retained for 180 days only.

F052 Version3

SGS Testing Korea Co.,Ltd.
322, The O valley, 555-9, Hogye-dong, Dongan-gu, Anyang-si, Gyeonggi-do, Korea 431-080
t +82 (0)31 4608 000 f +82 (0)31 4608 059 http://www.sgslab.co.kr ,www.kr.sgs.com/greenlab

Member of the SGS Group (Société Générale de Surveillance)

SGS

Test Report No. F690501/LF-CTSAYAA09-19728 Issued Date: July 15, 2009 Page 3 of 4

Sample No. : AYAA09-19728.001

Sample Description : LED

Item No./Part No. : 5252 White

Halogen Contents

Test Items	Unit	Test Method	MDL	Results
Bromine(Br)	mg/kg	BS EN 14582:2007 , IC	30	N.D.
Chlorine(Cl)	mg/kg	BS EN 14582:2007 , IC	30	N.D.
Fluorine(F)	mg/kg	BS EN 14582:2007 , IC	30	N.D.
Iodine(I)	mg/kg	BS EN 14582:2007 , IC	50	N.D.

Other(s)

Test Items	Unit	Test Method	MDL	Results
PFOS(Perfluorooctane Sulfonates-Acid/Metal Salt/Amide)	mg/kg	US EPA 3540C/3550C, LC/MS	1	N.D.

Picture of Sample as Received:

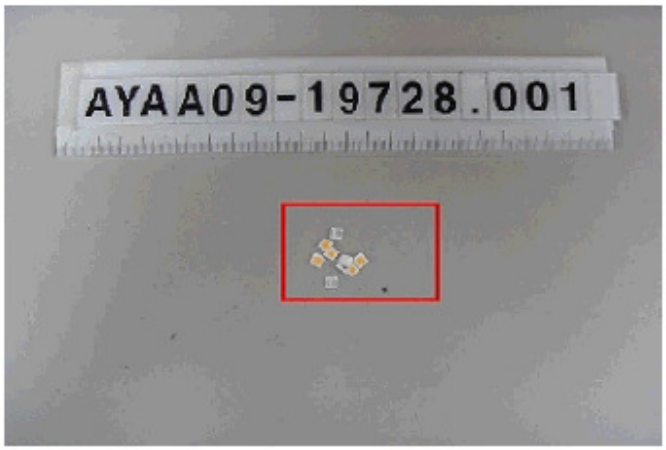

NOTE:
(1) N.D. = Not detected.(<MDL)
(2) mg/kg = ppm
(3) MDL = Method Detection Limit
(4) - = No regulation
(5) ** = Qualitative analysis (No Unit)
(6) * = Boiling-water-extraction:
Negative = Absence of CrVI coating
Positive = Presence of CrVI coating; the detected concentration in boiling-water-extraction solution is equal or greater than 0.02 mg/kg with 50 cm2 sample surface area.

This document is issued by the Company subject to its General Conditions of Service printed overleaf, available on request or accessible at www.sgs.com/terms_and_conditions.htm and, for electronic format documents, subject to Terms and Conditions for Electronic Documents at www.sgs.com/terms_e-document.htm. Attention is drawn to the limitation of liability, indemnification and jurisdiction issues defined therein. Any holder of this document is advised that information contained hereon reflects the Company's findings at the time of its intervention only and within the limits of Client's instructions, if any. The Company's sole responsibility is to its Client and this document does not exonerate parties to a transaction from exercising all their rights and obligations under the transaction documents. This document cannot be reproduced except in full, without prior written approval of the Company. Any unauthorized alteration, forgery or falsification of the content or appearance of this document is unlawful and offenders may be prosecuted to the fullest extent of the law.
Unless otherwise stated the results shown in this test report refer only to the sample(s) tested and such sample(s) are retained for 30 days only.

SGS Testing Korea Co.,Ltd.
322, The O valley, 555-9, Hogye-dong, Dongan-gu, Anyang-si, Gyeonggi-do, Korea 431-080
t +82 (0)31 4608 000 f +82 (0)31 4608 059 http://www.sgslab.co.kr ,www.kr.sgs.com/greenlab

Member of the SGS Group (Société Générale de Surveillance)

SGS

Test Report No. F690501/LF-CTSAYAA09-19728 Issued Date: July 15, 2009 Page 4 of 4

*** End ***

NOTE:
(1) N.D. = Not detected.(<MDL)
(2) mg/kg = ppm
(3) MDL = Method Detection Limit
(4) - = No regulation
(5) ** = Qualitative analysis (No Unit)
(6) * = Boiling-water-extraction:
Negative = Absence of CrVI coating
Positive = Presence of CrVI coating; the detected concentration in boiling-water-extraction solution is equal or greater than 0.02 mg/kg with 50 cm2 sample surface area.

This document is issued by the Company subject to its General Conditions of Service printed overleaf, available on request or accessible at www.sgs.com/terms_and_conditions.htm and, for electronic format documents, subject to Terms and Conditions for Electronic Documents at www.sgs.com/terms_e-document.htm. Attention is drawn to the limitation of liability, indemnification and jurisdiction issues defined therein. Any holder of this document is advised that information contained hereon reflects the Company's findings at the time of its intervention only and within the limits of Client's instructions, if any. The Company's sole responsibility is to its Client and this document does not exonerate parties to a transaction from exercising all their rights and obligations under the transaction documents. This document cannot be reproduced except in full, without prior written approval of the Company. Any unauthorized alteration, forgery or falsification of the content or appearance of this document is unlawful and offenders may be prosecuted to the fullest extent of the law.
Unless otherwise stated the results shown in this test report refer only to the sample(s) tested and such sample(s) are retained for 180 days only.

F052 Version3

SGS Testing Korea Co.,Ltd.
322, The O valley, 555-9, Hogye-dong, Dongan-gu, Anyang-si, Gyeonggi-do, Korea 431-080
t +82 (0)31 4608 000 f +82 (0)31 4608 059 http://www.sgslab.co.kr ,www.kr.sgs.com/greenlab

Member of the SGS Group (Société Générale de Surveillance)

Revision History
(Model:SPMWHT520AN2BAA0S0)

Date	Revision History	Writer	
		Drawn	Approved
2009.08.13	New Version	S.B. Yun	Y.C. Kim
2009.08.27	VF SPEC 변경(3 page) IV SPEC 변경(3 page)	S.B. Yun	Y.C. Kim