Bootstrap Power Supply for Motor Control and Inverter Systems

Applicable to All Gate-Drive and IPM Interface Optocouplers

Application Note 5490

Introduction

In motor control or inverter systems, a full-bridge topology (Figure 1) that comprises six insulated-gate bipolar transistors (IGBTs) requires several isolated power supplies or DC-to-DC converters for the IGBT gate drives. For example, it is common to use three isolated power supplies for each of the three top-bridge IGBTs and one isolated power supply for the bottom-bridge IGBTs. These transformer-based power supplies take up a significant amount of printed circuit board (PCB) space and require layout design considerations.

Bootstrap power supplies can be used to reduce the number of isolated power supplies or DC-to-DC converters. This helps to reduce cost and the PCB space as compared to transformer-based power supplies. The bootstrap output power supply circuit is used to power the top-bridge gate drives by making use of the inverter operating conditions to store and deliver the necessary power charges.

Bootstrap Power Supply Operations

Figure 2 shows a bootstrap circuit that provides power to the ACPL-H342/K342 gate-drive optocouplers. The components involved in the bootstrap circuitry are a capacitor (C_{BS}), diode (D_{BS}), and surge limiting resistor (R_{BS}). The circuit can also be used for other Avago gate-drive optocouplers such as the ACPL-332J (Active Miller Clamp, De-saturation Detection, UVLO, Isolated Fault Feedback), and IPM interface optocouplers.

The bootstrap circuit is used to power the upper ACPL-H342/K342 gate drive that controls and drives the top-bridge IGBT, Q1. A conventional isolated power supply (V_{CC}) is used to power the lower gate drive that controls and drives the bottom-bridge IGBT, Q2.

The bootstrap operating sequence is as follows: when the bottom-bridge IGBT, Q2, is turned on and the top-bridge IGBT, Q1, is turned off, the V_{CC} power supply charges the capacitor C_{BS}. As shown in Figure 2, the current I_{CHARGE} (blue) flows through R_{BS}, D_{BS}, and charges C_{BS}. The current returns along the emitter line of Q1, passes through Q2, which is turned on, and returns to the negative node of V_{CC}.

When it is the turn for Q1 to be turned on and Q2 to be turned off, the charges stored in C_{BS} provide the power for the upper gate drive and current to drive the gate of Q1. As shown in Figure 3, current $I_{DISCHARGE}$ (orange) flows into the upper gate drive to provide current for Q1's output stage and to power the internal detector IC circuitry. There will be some current that is able to flow from C_{BS}, through D_{BS} and into V_{CC} supply. An appropriate choice of a fast-recovery diode will help minimize this leaking current.

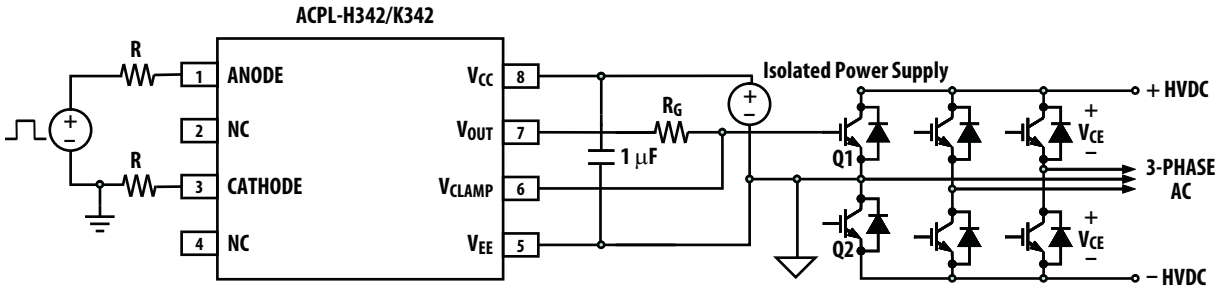

Figure 1. Motor control or inverter system using a full-bridge topology

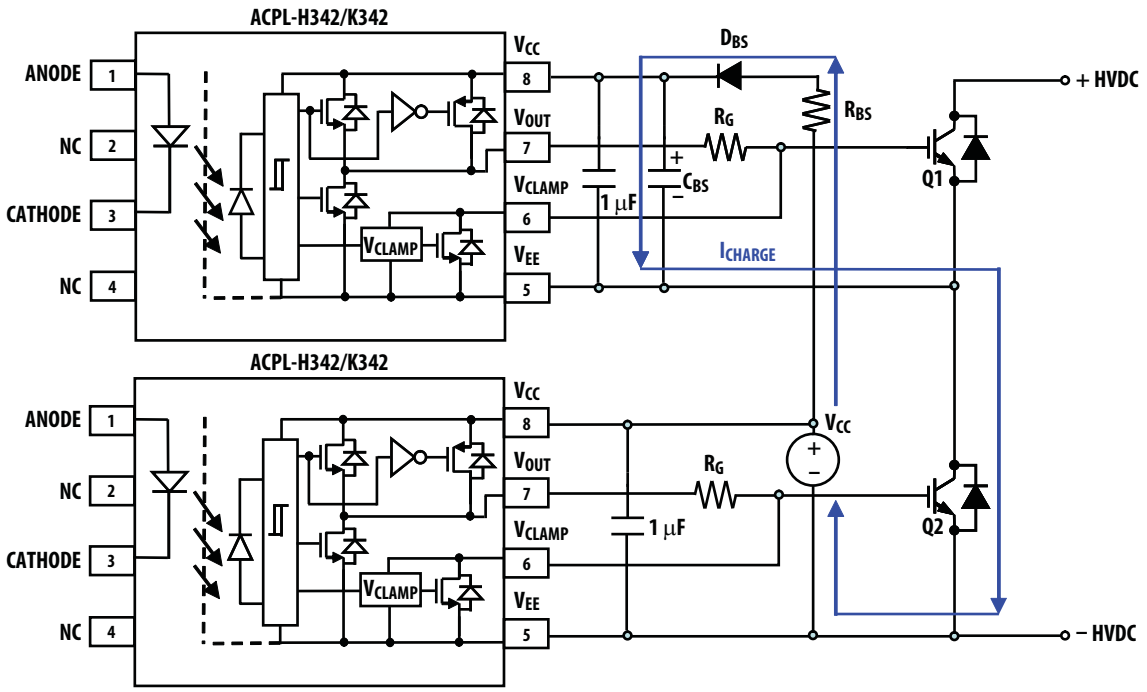

Figure 2. Bootstrap circuit charging

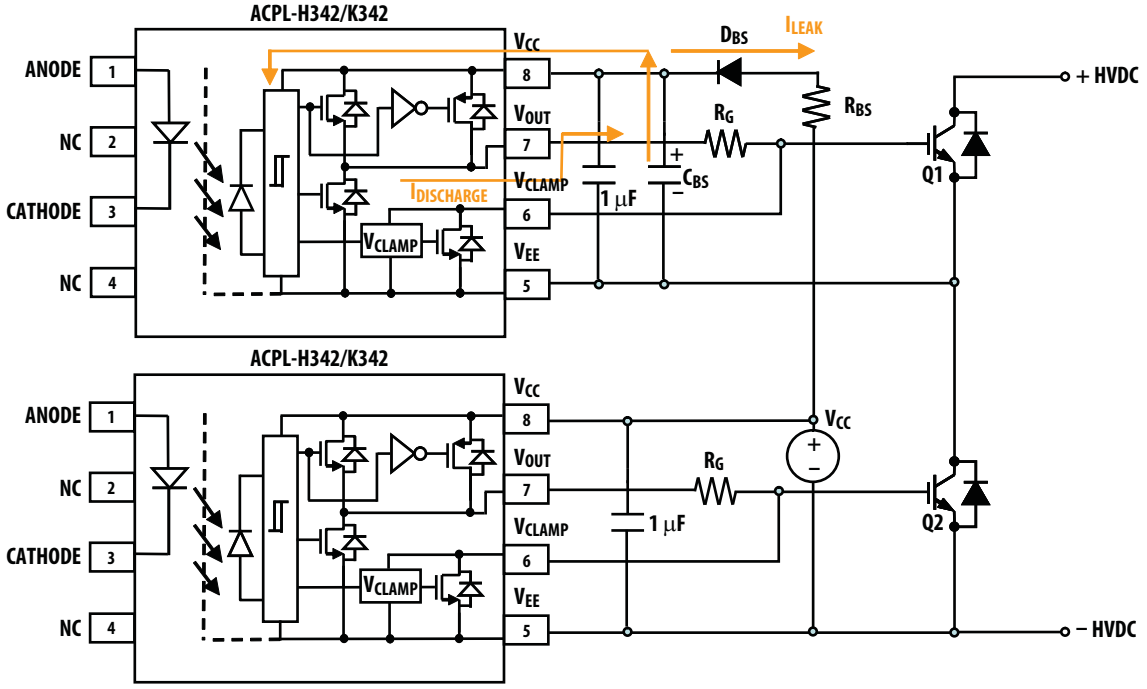

Figure 3. Bootstrap circuit discharging

Factors determining bootstrap capacitance, C_{BS}

The value of the bootstrap capacitor C_{BS} must be optimized to provide a sufficient power supply to the gate-drive optocoupler in its smallest size. This helps to reduce cost, save board space and decrease charging time.

The minimum size of C_{BS} needed to store enough charge for gate-drive operation can be calculated with the following equation:

$$C_{BS} \geq 1.5 \left(\frac{Qg + \frac{I_{CC} \times m}{f} + \frac{I_{CBS(LEAK)} \times m}{f}}{V_{RIPPLE}} \right)$$

Where,

f = gate-drive PWM switching frequency

m = modulation index for PWM (duty cycle) of IGBT, Q1

I_{CC} = gate-drive supply current

Qg = gate charge for IGBT, Q1

$I_{CBS(LEAK)}$ = bootstrap capacitor leakage current

V_{RIPPLE} = maximum ripple voltage allowed

Gate-drive PWM switching frequency refers to the number of times per second that the bootstrap-powered gate drive requires to turn on and drive its IGBT. Modulation index for PWM of the top-bridge IGBT, Q1, refers to the duty cycle at which Q1 turns on in a particular time period. These parameters depend on the application and its design requirements.

Gate charge of the upper IGBT, Q1, refers to the amount of charges required at the gate of the IGBT to turn it on. This parameter can be found in the IGBT's datasheet. Bootstrap capacitor leakage current will happen if an electrolytic capacitor is used. This parameter can be found in the capacitor's datasheet, but can be ignored if other types of capacitors are used.

The parameters pertaining to gate-drive optocouplers that will affect the bootstrapping efficiency are I_{CC} and V_{RIPPLE}. Gate-drive supply current, I_{CC}, can be found in the gate drive's datasheet electrical specifications. ACPL-H342/K342 consumes a low maximum supply current of 2.5 mA, making it very efficient, since less power is needed for the optocoupler while more can be delivered to drive the gate of the IGBT.

The maximum ripple voltage allowed refers to the stability of the bootstrap power supply in order to provide an optimum IGBT gate voltage, typically at 15 V. The ACPL-H342/K342 has a rail-to-rail output voltage which means the output does not suffer any drop from the supply, V_{CC}, applied to the gate-drive optocoupler. This is unlike the older generation gate-drive optocouplers which suffer a $3V_{BE}$ drop due to the bipolar Darlington output stage. In other words, the rail-to-rail output of the ACPL-H342/K342 will increase the bootstrap power supply ripple margin, which is inversely proportional to the size of the bootstrap capacitor. Hence, a smaller C_{BS} can be used without concern that the V_{CC} will fall below the IGBT's optimum gate voltage.

Table 1. ACPL-H342/K342 datasheet extractions showing rail-to-rail output voltage and low supply current.

Parameter	Symbol	Typ.	Max.
High Level Output Voltage	V_{OH}	V_{CC} @ I_O = 0 mA	
High Level Supply Current	I_{CCH}	1.68 mA	2.5 mA

Factors determining bootstrap diode, D_{BS}, and resistor, R_{BS}

It is recommended that a fast recovery bootstrap diode, D_{BS}, be selected to minimize the amount of leakage charge flowing back from C_{BS} into the V_{CC} supply. The maximum reverse recovery time specification, t_{rr}, can be found in the diode's datasheet.

The R_{BS} resistor is used to limit the surge current through the diode and to the V_{CC} pin of the gate-drive optocoupler. A resistor of 5 Ω is normally sufficient. To select the maximum value of R_{BS}, the C_{BS} x R_{BS} time constant must be able to meet the minimum charging time of $\frac{1}{f} \times (1 - m)$.

An R_{BS} value that is too high will not allow sufficient time for the bootstrap capacitor to charge to the required V_{CC} voltage. The maximum R_{BS} value is given in the following equation:

$$C_{BS} \leq \left(\frac{\frac{1}{f} \times (1 - m)}{C_{BS}} \right)$$

For product information and a complete list of distributors, please go to our web site: **www.avagotech.com**

Avago, Avago Technologies, and the A logo are trademarks of Avago Technologies in the United States and other countries.
Data subject to change. Copyright © 2005-2010 Avago Technologies. All rights reserved.
AV02-2718EN - November 12, 2010