Cree® Screen Master® 5-mm Oval LED C5SMS-GJS

Data Sheet

This oval LED is specifically designed for variable-message signs and passenger-information signs. The oval-shaped radiation pattern and high luminous intensity ensure that these devices are excellent for wide-field-of-view outdoor applications where a wide viewing angle and readability in sunlight are essential.

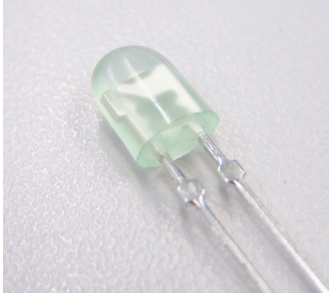

These lamps are made with an advanced optical-grade epoxy that offers superior high-temperature and high-moisture-resistance performance in outdoor signal and sign applications. The encapsulation resin contains anti-UV material in order to reduce the effects of long-term exposure to direct sunlight.

FEATURES

- Size (mm): 5
- Color and Typical Dominant Wavelength (nm):
  - Green (527)
- Luminous Intensity (mcd)
  - Green (770 - 2130)
- Lead-Free
- RoHS Compliant

APPLICATIONS

- Electronic Signs & Signals (ESS)
- Full-Color Video Screen
- Motorway Signs
- Variable Message Sign (VMS)
- Advertising Signs
- Petrol Signs

Data Sheet: CLD-CT964.001

Absolute Maximum Ratings (T_A = 25°C)

Items	Symbol	Absolute Maximum Rating	Unit
Forward Current	I_F	25	mA
Peak Forward Current Note1	I_{FP}	100	mA
Reverse Voltage	V_R	5	V
Power Dissipation	P_D	100	mW
Operation Temperature	T_{opr}	-40 ~ +95	°C
Storage Temperature	T_{stg}	-40 ~ +100	°C
Lead Soldering Temperature	T_{sol}	Max. 260°C for 3 sec. max. (3 mm from the base of the epoxy bulb)	

Note:

1. Pulse width ≤0.1 msec, duty ≤1/10.

Typical Electrical & Optical Characteristics (T_A = 25°C)

Characteristics	Symbol	Condition	Unit	Minimum	Typical	Maximum
Forward Voltage	V_F	I_F = 20 mA	V		3.4	4.0
Reverse Current	I_R	V_R = 5 V	μA			100
Dominant Wavelength	λ_D	I_F = 20 mA	nm	520	527	535
Luminous Intensity	I_V	I_F = 20 mA	mcd	770	1200	

Copyright © 2009 Cree, Inc. All rights reserved. The information in this document is subject to change without notice. Cree and the Cree logo are registered trademarks of Cree, Inc.

Cree, Inc.
4600 Silicon Drive
Durham, NC 27703
USA Tel: +1.919.313.5300
Fax: +1.919.313.5778
www.cree.com/ledlamps

Intensity Bin Limit (I_F = 20 mA)

Green

Bin Code	Min.(mcd)	Max.(mcd)
S0	770	1100
T0	1100	1520
U0	1520	2130

Tolerance of measurement of luminous intensity is ±15%.

Color Bin Limit (I_F = 20 mA)

Green

Bin Code	Min.(nm)	Max.(nm)
G7	520	525
G8	525	530
G9	530	535

Tolerance of measurement of dominant wavelength is ±1 nm.

Copyright © 2009 Cree, Inc. All rights reserved. The information in this document is subject to change without notice. Cree and the Cree logo are registered trademarks of Cree, Inc.

Cree, Inc.
4600 Silicon Drive
Durham, NC 27703
USA Tel: +1.919.313.5300
Fax: +1.919.313.5778
www.cree.com/ledlamps

Order Code Table*

Color	Kit Number	Luminous Intensity (mcd)		Dominant Wavelength				Pack-age
		Min.	Max.	Color Bin	Min. (nm)	Color Bin	Max. (nm)	
Green	C5SMS-GJS-CS0U0791	770	2130	G7	520	G9	535	Bulk
Green	C5SMS-GJS-CS0U0792	770	2130	G7	520	G9	535	Ammo

Notes:

1. The above kit numbers represent order codes that include multiple intensity-bin and color-bin codes. Only one intensity-sub-bin code and one color-bin code will be shipped on each reel. Selected single intensity-bin, single color-bin codes will be orderable in certain quantities.
2. Please refer to the "Cree LED Lamp Reliability Test Standards" document for reliability test conditions.
3. Please refer to the "Cree LED Lamp Soldering & Handling" document for information about how to use this LED product safely.

Copyright © 2009 Cree, Inc. All rights reserved. The information in this document is subject to change without notice. Cree and the Cree logo are registered trademarks of Cree, Inc.

Cree, Inc.
4600 Silicon Drive
Durham, NC 27703
USA Tel: +1.919.313.5300
Fax: +1.919.313.5778
www.cree.com/ledlamps

Graphs

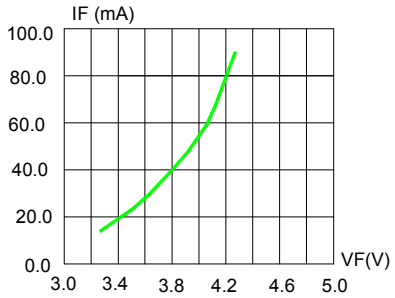

FIG.1 FORWARD CURRENT VS. FORWARD VOLTAGE.

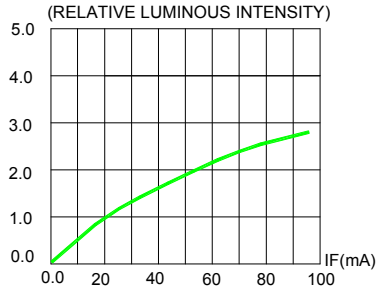

FIG.2 RELATIVE LUMINOUS INTENSITY VS. FORWARD CURRENT

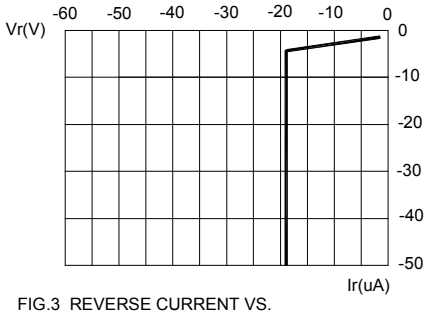

FIG.3 REVERSE CURRENT VS. REVERSE VOLTAGE.

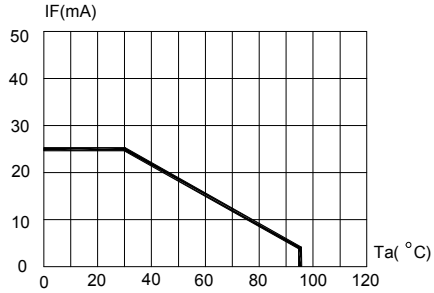

FIG.4 MAXIMUM FORWARD DC CURRENT VS AMBIENT TEMPERATURE (Tjmax=105℃)

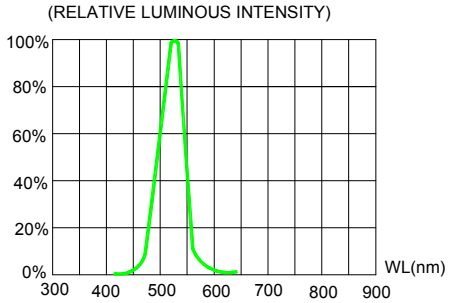

FIG.5 RELATIVE LUMINOUS INTENSITY VS. WAVELENGTH.

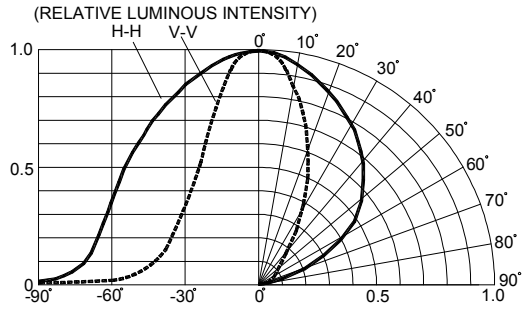

FIG.6 FAR FIELD PATTERN

The above data are collected from statistical figures that do not necessarily correspond to the actual parameters of each single LED. Hence, these data will be changed without further notice.

Copyright © 2009 Cree, Inc. All rights reserved. The information in this document is subject to change without notice. Cree and the Cree logo are registered trademarks of Cree, Inc.

Cree, Inc.
4600 Silicon Drive
Durham, NC 27703
USA Tel: +1.919.313.5300
Fax: +1.919.313.5778
www.cree.com/ledlamps

Mechanical Dimensions

All dimensions are in mm. Tolerance is ±0.25 mm unless otherwise noted.

An epoxy meniscus may extend about 1.5 mm down the leads.

Burr around bottom of epoxy may be 0.5 mm max.

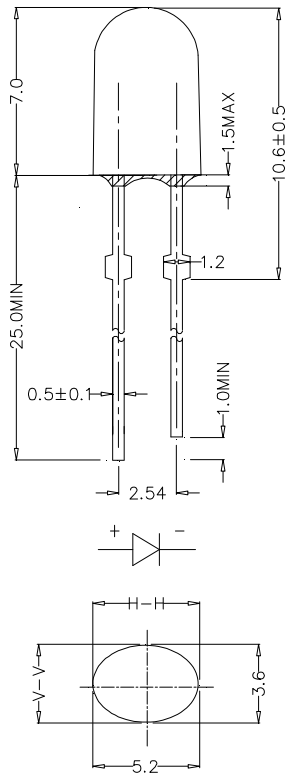

Notes

RoHS Compliance

The levels of environmentally sensitive, persistent biologically toxic (PBT), persistent organic pollutants (POP), or otherwise restricted materials in this product are below the maximum concentration values (also referred to as the threshold limits) permitted for such substances, or are used in an exempted application, in accordance with EU Directive 2002/95/EC on the restriction of the use of certain hazardous substances in electrical and electronic equipment (RoHS), as amended through April 21, 2006.

Vision Advisory Claim

Users should be cautioned not to stare at the light of this LED product. The bright light can damage the eye.

Copyright © 2009 Cree, Inc. All rights reserved. The information in this document is subject to change without notice. Cree and the Cree logo are registered trademarks of Cree, Inc.

Cree, Inc.
4600 Silicon Drive
Durham, NC 27703
USA Tel: +1.919.313.5300
Fax: +1.919.313.5778
www.cree.com/ledlamps

Kit Number System

Cree LED lamps are tested and sorted into performance bins. A bin is specified by ranges of color, forward voltage, and brightness. Sorted LEDs are packaged for shipping in various convenient options. Please refer to the "Cree LED Lamp Packaging Standard" document for more information about shipping and packaging options.

Cree LEDs are sold by order codes in combinations of bins called kits. Order codes are configured in the following manner:

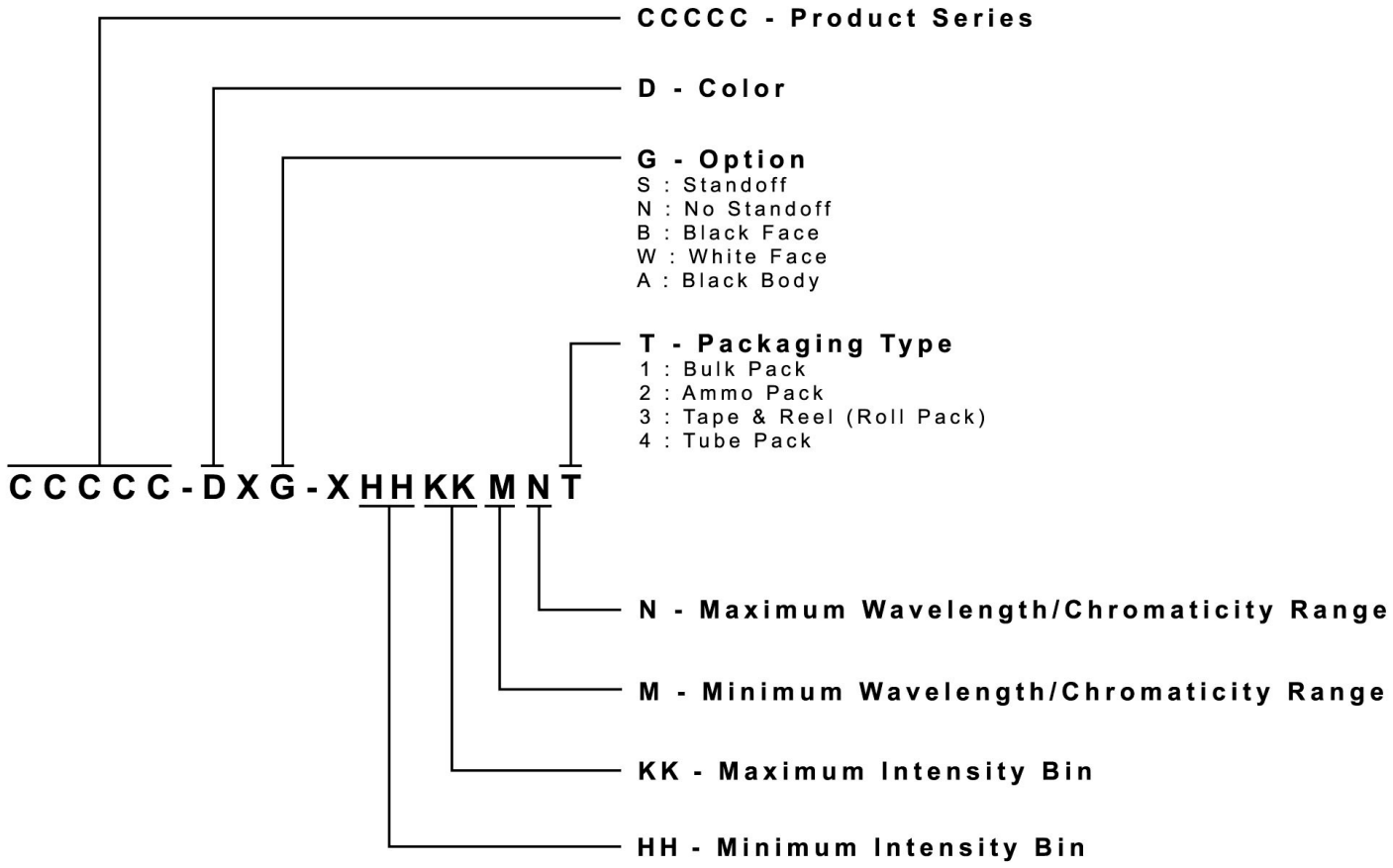

Copyright © 2009 Cree, Inc. All rights reserved. The information in this document is subject to change without notice. Cree and the Cree logo are registered trademarks of Cree, Inc.

Cree, Inc.
4600 Silicon Drive
Durham, NC 27703
USA Tel: +1.919.313.5300
Fax: +1.919.313.5778
www.cree.com/ledlamps

Package

Features:

- The LEDs are packed in cardboard boxes after packaging in normal or anti-electrostatic bags.
- Cardboard boxes will be used to protect the LEDs from mechanical shock during transportation.
- The boxes are not water-resistant, and they must be kept away from water and moisture.
- There are two types of packaging: bulk pack and ammo pack.
- Max 500 pcs per bulk and max 2500 pcs per ammo.

Bulk Pack Packaging Type:

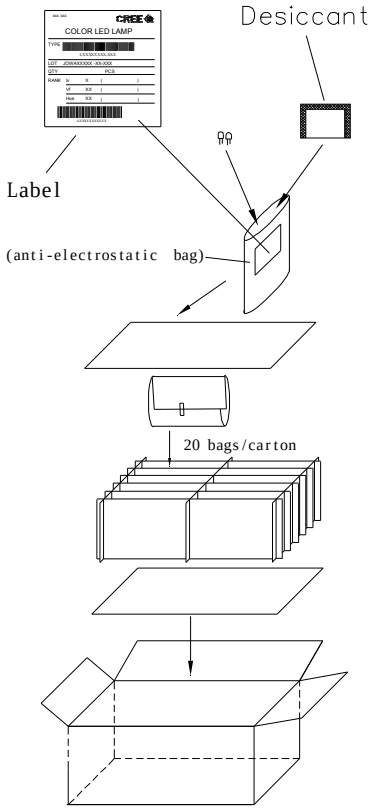

Ammo Pack Packaging Type:

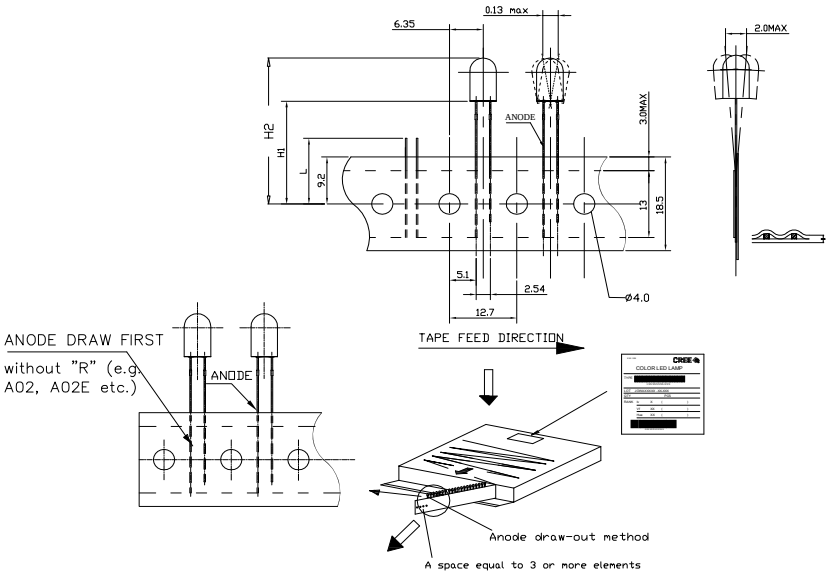

Copyright © 2009 Cree, Inc. All rights reserved. The information in this document is subject to change without notice. Cree and the Cree logo are registered trademarks of Cree, Inc.

Cree, Inc.
4600 Silicon Drive
Durham, NC 27703
USA Tel: +1.919.313.5300
Fax: +1.919.313.5778
www.cree.com/ledlamps