Cree® LED Lamp Packaging

This application note applies to the following products:

- High-brightness oval and round LED lamps
- P4 LEDs
- Surface-mount PLCC LEDs

For XLamp® LED packaging information, refer to the binning and labeling documents for specific products.

Introduction

1. Features

- The LEDs are packed in cardboard boxes after packaging in normal or anti-electrostatic bags.
- Cardboard boxes will be used to protect the LEDs from mechanical shock during transportation.
- The boxes are not water resistant, and they must be kept away from water and moisture.

2. Description

This document describes four different packaging types: bulk pack, tape & reel, tube pack and SMD LED pack.

- The bulk pack is available for P2 LEDs.
- Tape & reel is available for automatic insertion equipment of P2 LEDs.
- The tube pack is available for automatic insertion equipment of P4 LEDs.
- The SMD LED pack is available for SMD LEDs.

Packaging Specifications

1. Bulk Pack

Type	Fig	Quantity per Bag	Bags per Inner Carton	Inner Carton per Master	Quantity Total	Remark
Bulk Pack 1	1	500 pcs	20	4	40,000 pcs	Non-P4 LED
Bulk Pack 2	1	500 pcs	20	2	20,000 pcs	Non-P4 LED
Bulk Pack 3	1	500 pcs	12	NA	6,000 pcs	Non-P4 LED

2. Tape & Reel

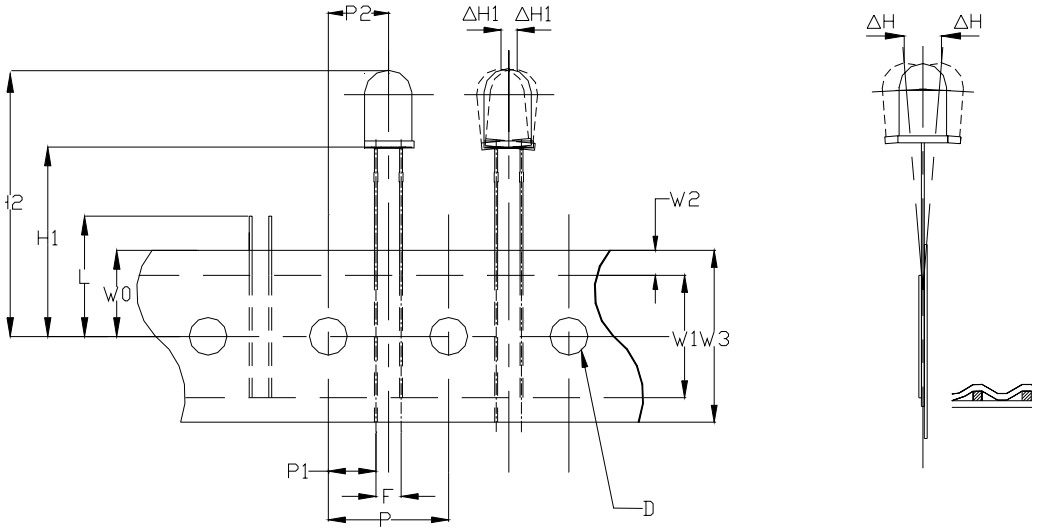

Item	Sym-bol	Specification	
		Min	Max
		mm (inch)	mm (inch)
Tape Feed Hole Diameter	D	3.8 (0.149)	4.2 (0.165)
Component Lead Pitch	F	2.3 (0.091)	3.0 (0.118)
Front-to-Rear Deflection	ΔH	-	2.0 (0.078)
Left-to-Right Deflection	ΔH1	-	1.3 (0.051)
Feed Hole to Bottom of Component	H1	19.5 (0.768)	21.5 (0.847)
Feed Hole to Overall Component Height	H2	-	36.0 (1.417)
Lead Length After Component Height	L	W_0	11.0 (0.433)
Feed Hole Pitch	P	12.4 (0.488)	13.0 (0.511)
Lead Location	P_1	4.40 (0.173)	5.80 (0.228)
Center of Component Location	P_2	5.05 (0.198)	7.65 (0.301)
Total Tape Thickness	T	-	0.90 (0.035)
Feed Hole Location	W_0	8.5 (0.334)	9.75 (0.384)
Adhesive Tape Width	W_1	12.5 (0.492)	13.5 (0.531)
Adhesive Tape Position	W_2	0	3.0 (0.118)
Tape Width	W_3	17.5 (0.689)	19.0 (0.748)

Copyright © 2007-2009 Cree, Inc. All rights reserved. The information in this document is subject to change without notice. Cree, the Cree logo and XLamp are registered trademarks of Cree, Inc.

Cree, Inc.
4600 Silicon Drive
Durham, NC 27703
USA Tel: +1.919.313.5300
www.cree.com/ledlamps

2-1: Roll Pack

Type	Fig	Quantity per Bag	Bags per Inner Carton	Inner Carton per Master	Quantity Total	Remark
Roll Pack 1	2	1000 pcs	3	4	12000 pcs	5-mm round
Roll Pack 2	2	2000 pcs	3	4	24000 pcs	3-mm round or 4-mm oval lamp
Roll Pack 3	2	1500 pcs	3	4	18000 pcs	5-mm oval lamp

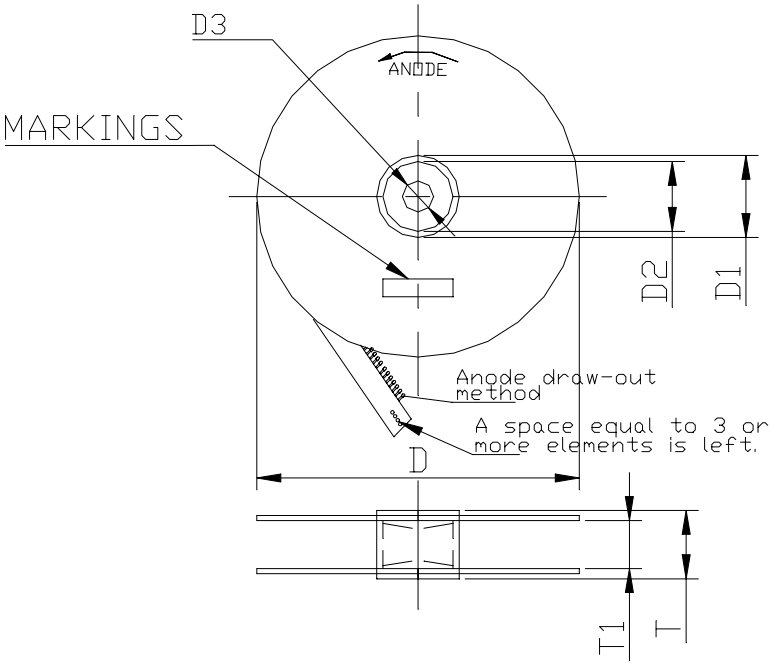

Item	Symbol	Specification		
		Min	Max	Unit
Reel Diameter	D	335 (13.19)	345 (13.58)	mm (inch)
Core Diameter	D_1	88 (3.46)	94 (3.70)	mm (inch)
Hub Recess Inside Diameter	D_2	70 (2.76)	74 (2.91)	mm (inch)
Arbor Hole Diameter	D_3	30 (1.18)	34 (1.34)	mm (inch)
Overall Reel Thickness	T	-	55 (2.17)	mm (inch)
Inside Reel Flange Thickness	T1	44 (1.73)	50 (1.97)	mm (inch)
Packing Quantity (DIA3)	Qty	2000		PCS
Packing Quantity (DIA5)	Qty	1000		PCS

Copyright © 2007-2009 Cree, Inc. All rights reserved. The information in this document is subject to change without notice. Cree, the Cree logo and XLamp are registered trademarks of Cree, Inc.

Cree, Inc.
4600 Silicon Drive
Durham, NC 27703
USA Tel: +1.919.313.5300
www.cree.com/ledlamps

2-2: Ammo Pack

Type	Fig	Quantity per Bag	Bags per Inner Carton	Inner Carton per Master	Quantity Total	Remark
Ammo Pack 1	3	2500 pcs	4	4	40000 pcs	5-mm round lamps
Ammo Pack 2	3	2500 pcs	4	4	40000 pcs	5-mm oval lamps
Ammo Pack 3	3	3000 pcs	4	4	48000 pcs	3-mm round or 4-mm oval lamps

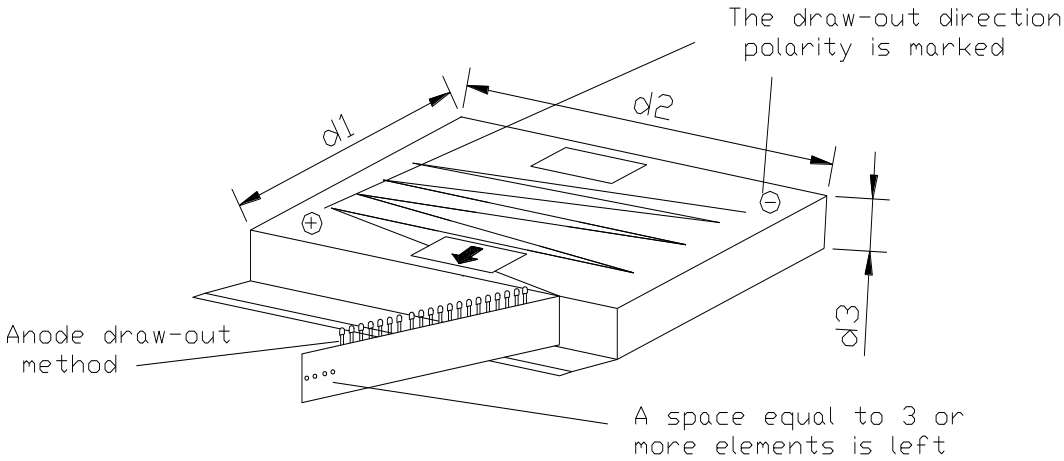

Item	Symbol	Specification			
		3-mm or 4-mm Round and Oval	5-mm Oval	5-mm Round	Unit
Box Length	d1	244 (9.61)	244 (9.61)	284 (11.18)	mm (inch)
Box Width	d2	328 (12.91)	328 (12.91)	328 (12.91)	mm (inch)
Box Height	d3	51 (2.01)	51 (2.01)	51 (2.01)	mm (inch)
Packing Quantity	Qty	3000	2500	2500	pcs

Copyright © 2007-2009 Cree, Inc. All rights reserved. The information in this document is subject to change without notice. Cree, the Cree logo and XLamp are registered trademarks of Cree, Inc.

Cree, Inc.
4600 Silicon Drive
Durham, NC 27703
USA Tel: +1.919.313.5300
www.cree.com/ledlamps

3. Tube Pack

Type	Fig	Quantity per Bag	Bags per Inner Carton	Inner Carton per Master	Quantity Total	Remark
Tube Pack 1	4	60 pcs	50	6	18000 pcs	P4 lamp
Tube Pack 2	4	60 pcs	50	3	9000 pcs	P4 lamp

4. SMD Pack

Type	Fig	Quantity per Bag	Bags per Inner Carton	Inner Cartons per Master	Quantity Total	Remark
LM1/LV1/LA1/LA2/ LM4/LPP Pack 1	5	2000 pcs	1	10	20000 pcs	LM1/LV1/LA1/LA2/LM4/LPP qty less than 20 K pcs
LM1/LV1/LA1/LA2/ LM4/LPP Pack 2	5	2000 pcs	1	20	40000 pcs	LM1/LV1/LA1/LA2/LM4/LPP qty more than 20 K pcs
LM2 Pack1	5	700 pcs	1	10	7000 pcs	LM2 qty less than 7 K pcs
LM2 Pack2	5	700 pcs	1	20	14000 pcs	LM2 qty more than 7 K pcs
LP6/LV6 Pack1	5	900 pcs	1	10	9000 pcs	LP6/LV6 qty less than 9 K pcs
LP6/LV6 Pack2	5	900 pcs	1	20	18000 pcs	LP6/LV6 qty more than 9 K pcs
LM3 Pack1	5	2500 pcs	1	10	25000 pcs	LM3 qty less than 25 K pcs
LM3 Pack2	5	2500 pcs	1	20	50000 pcs	LM3 qty more than 25 K pcs
LM6 Pack1	5	1000 pcs	1	10	10000 pcs	LU6/LM6 qty less than 10 K pcs
LM6 Pack1	5	1000 pcs	1	20	20000 pcs	LU6/LM6 qty more than 10 K pcs
LN6 SMD Pack1	5	1100 pcs	1	10	11000 pcs	LN6 qty less than 11 K pcs
LN6 SMD Pack1	5	1100 pcs	1	20	22000 pcs	LN6 qty more than 11 K pcs

Copyright © 2007-2009 Cree, Inc. All rights reserved. The information in this document is subject to change without notice. Cree, the Cree logo and XLamp are registered trademarks of Cree, Inc.

Cree, Inc.
4600 Silicon Drive
Durham, NC 27703
USA Tel: +1.919.313.5300
www.cree.com/ledlamps

Figure 1: Bulk Pack 1, 2, 3

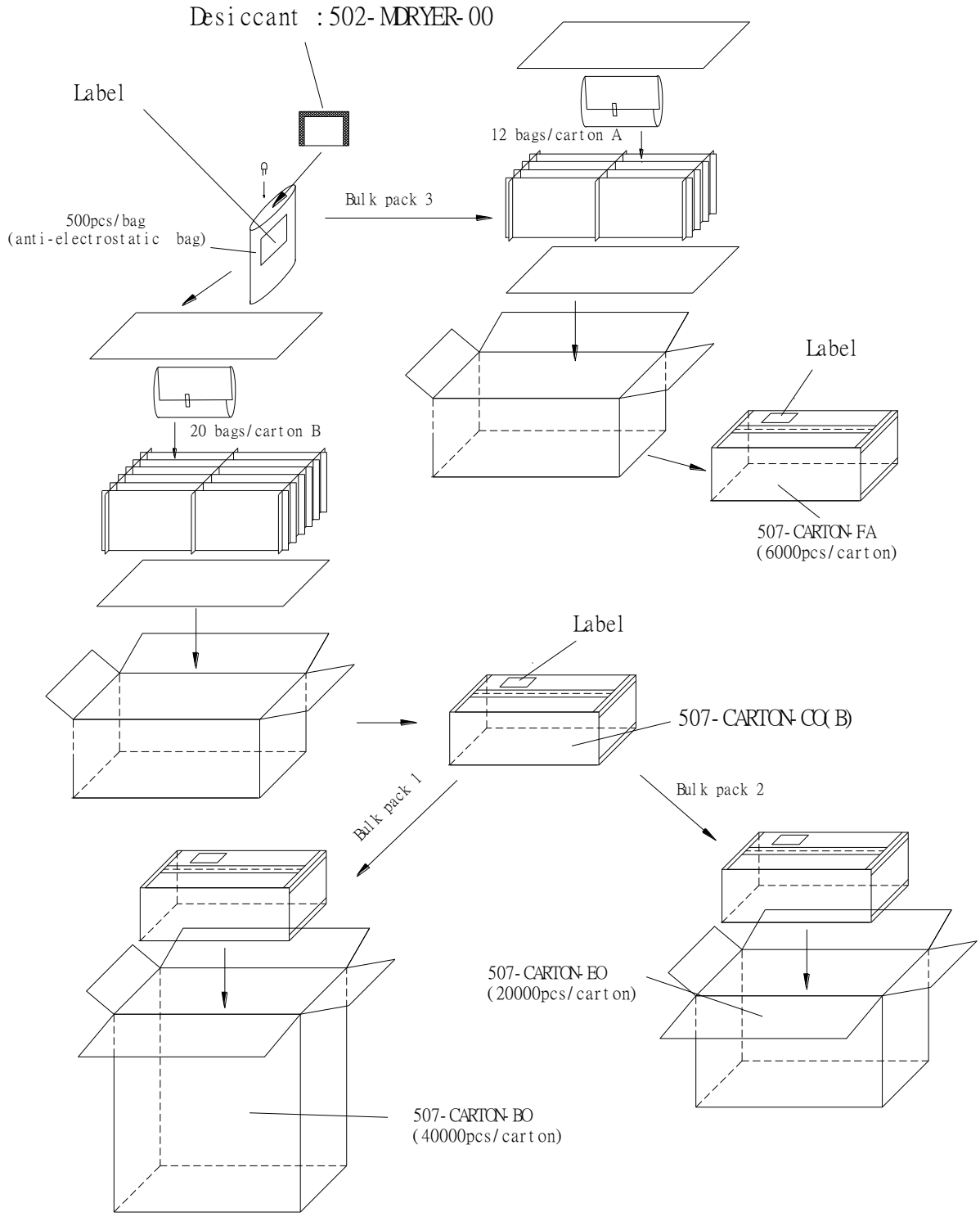

Copyright © 2007-2009 Cree, Inc. All rights reserved. The information in this document is subject to change without notice. Cree, the Cree logo and XLamp are registered trademarks of Cree, Inc.

Cree, Inc.
4600 Silicon Drive
Durham, NC 27703
USA Tel: +1.919.313.5300
www.cree.com/ledlamps

Figure 2: Roll Pack 1, 2, 3

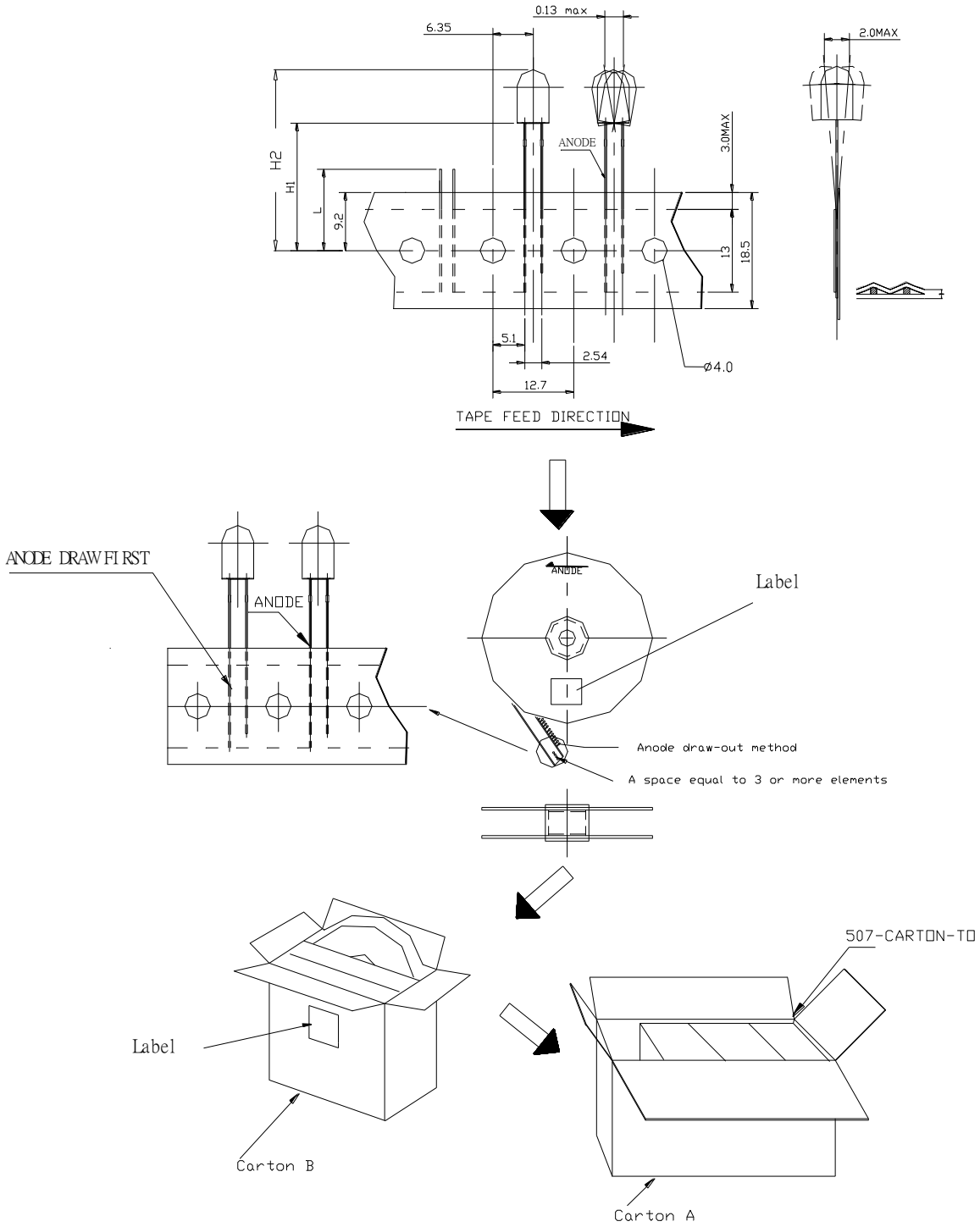

Copyright © 2007-2009 Cree, Inc. All rights reserved. The information in this document is subject to change without notice. Cree, the Cree logo and XLamp are registered trademarks of Cree, Inc.

Cree, Inc.
4600 Silicon Drive
Durham, NC 27703
USA Tel: +1.919.313.5300
www.cree.com/ledlamps

Figure 3: Ammo Pack 1, 2, 3

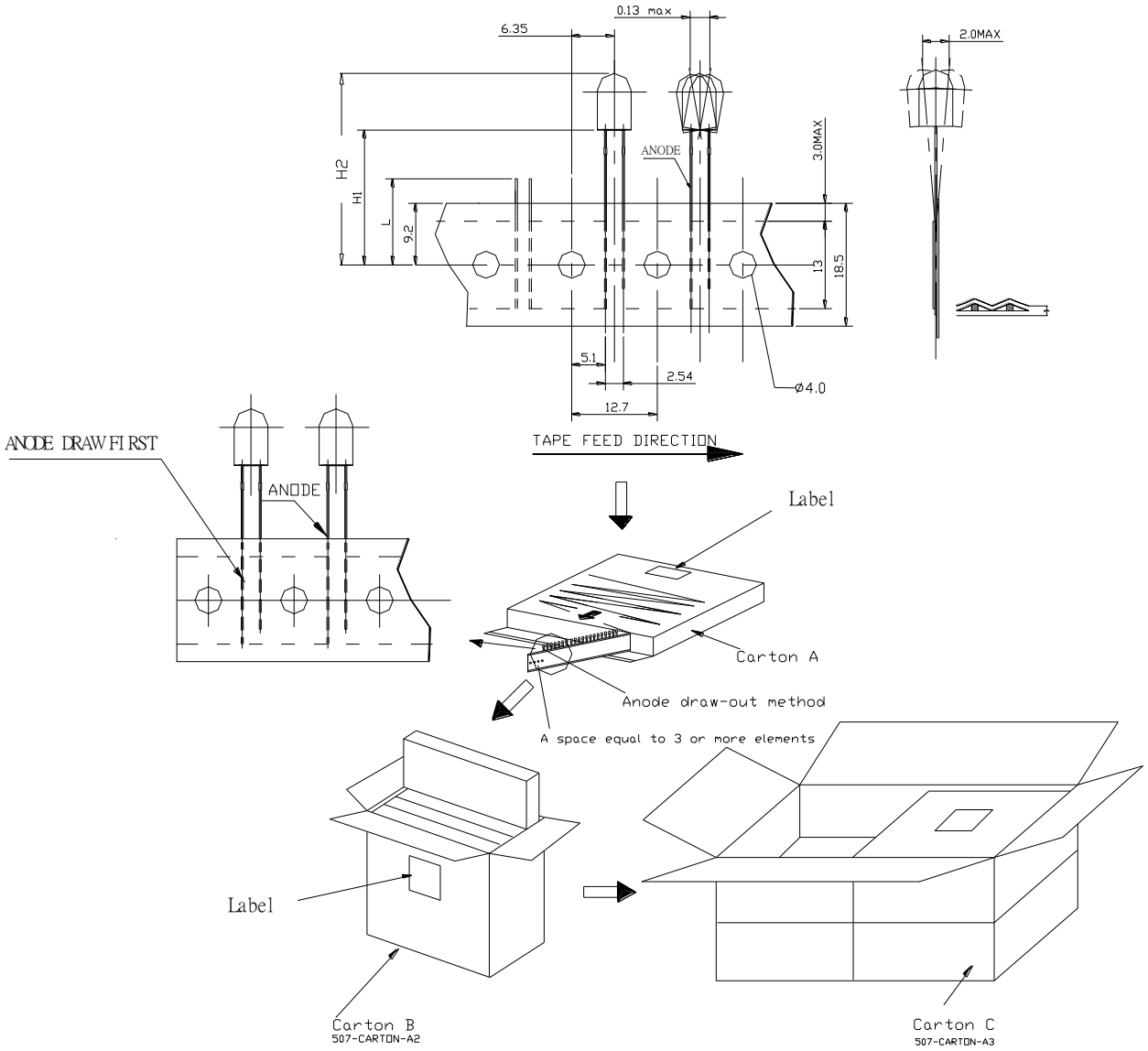

Copyright © 2007-2009 Cree, Inc. All rights reserved. The information in this document is subject to change without notice. Cree, the Cree logo and XLamp are registered trademarks of Cree, Inc.

Cree, Inc.
4600 Silicon Drive
Durham, NC 27703
USA Tel: +1.919.313.5300
www.cree.com/ledlamps

Figure 4: Tube Pack 1, 2

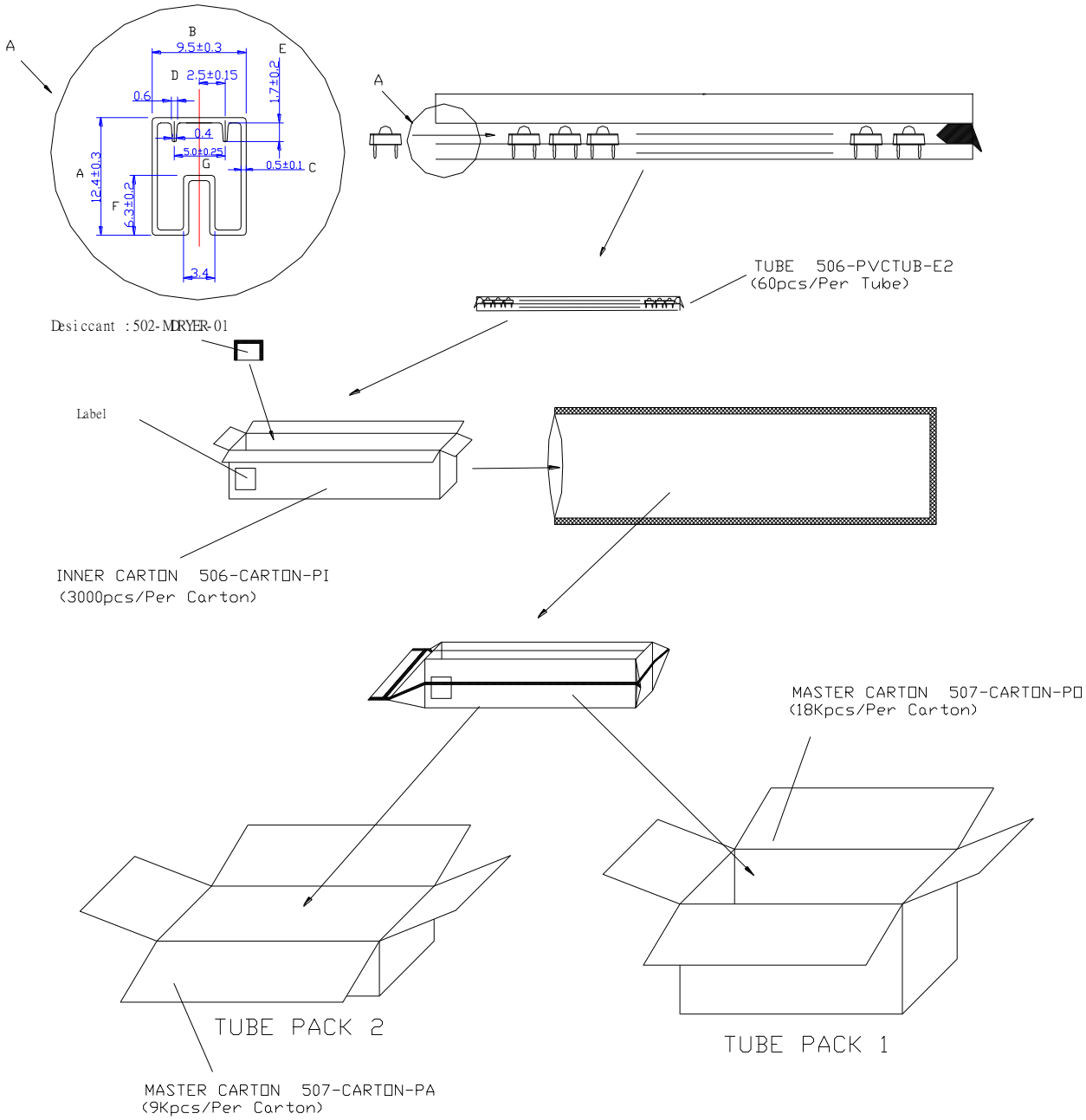

Copyright © 2007-2009 Cree, Inc. All rights reserved. The information in this document is subject to change without notice. Cree, the Cree logo and XLamp are registered trademarks of Cree, Inc.

Cree, Inc.
4600 Silicon Drive
Durham, NC 27703
USA Tel: +1.919.313.5300
www.cree.com/ledlamps

Figure 5: SMD Pack

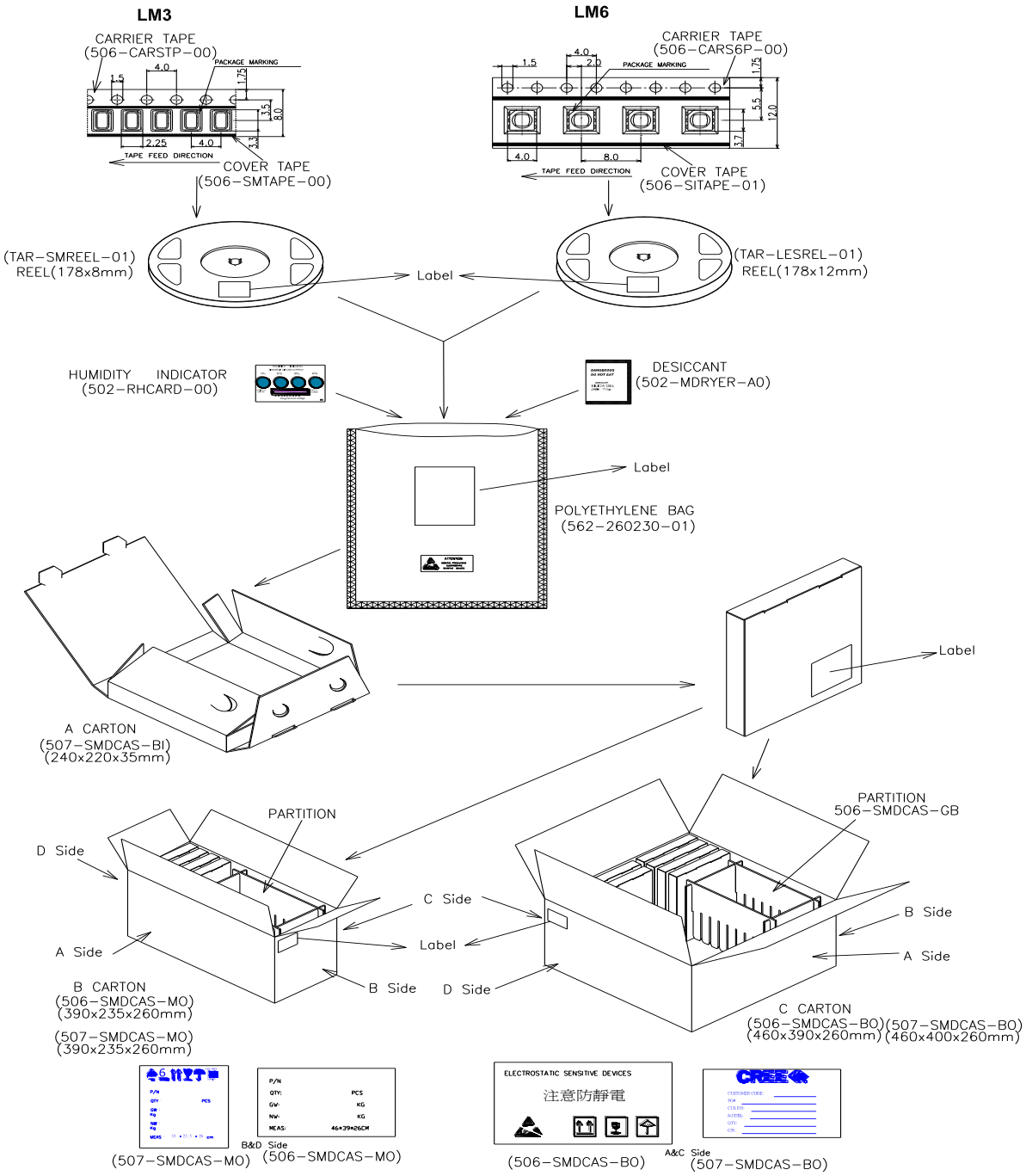

Copyright © 2007-2009 Cree, Inc. All rights reserved. The information in this document is subject to change without notice. Cree, the Cree logo and XLamp are registered trademarks of Cree, Inc.

Cree, Inc.
4600 Silicon Drive
Durham, NC 27703
USA Tel: +1.919.313.5300
www.cree.com/ledlamps

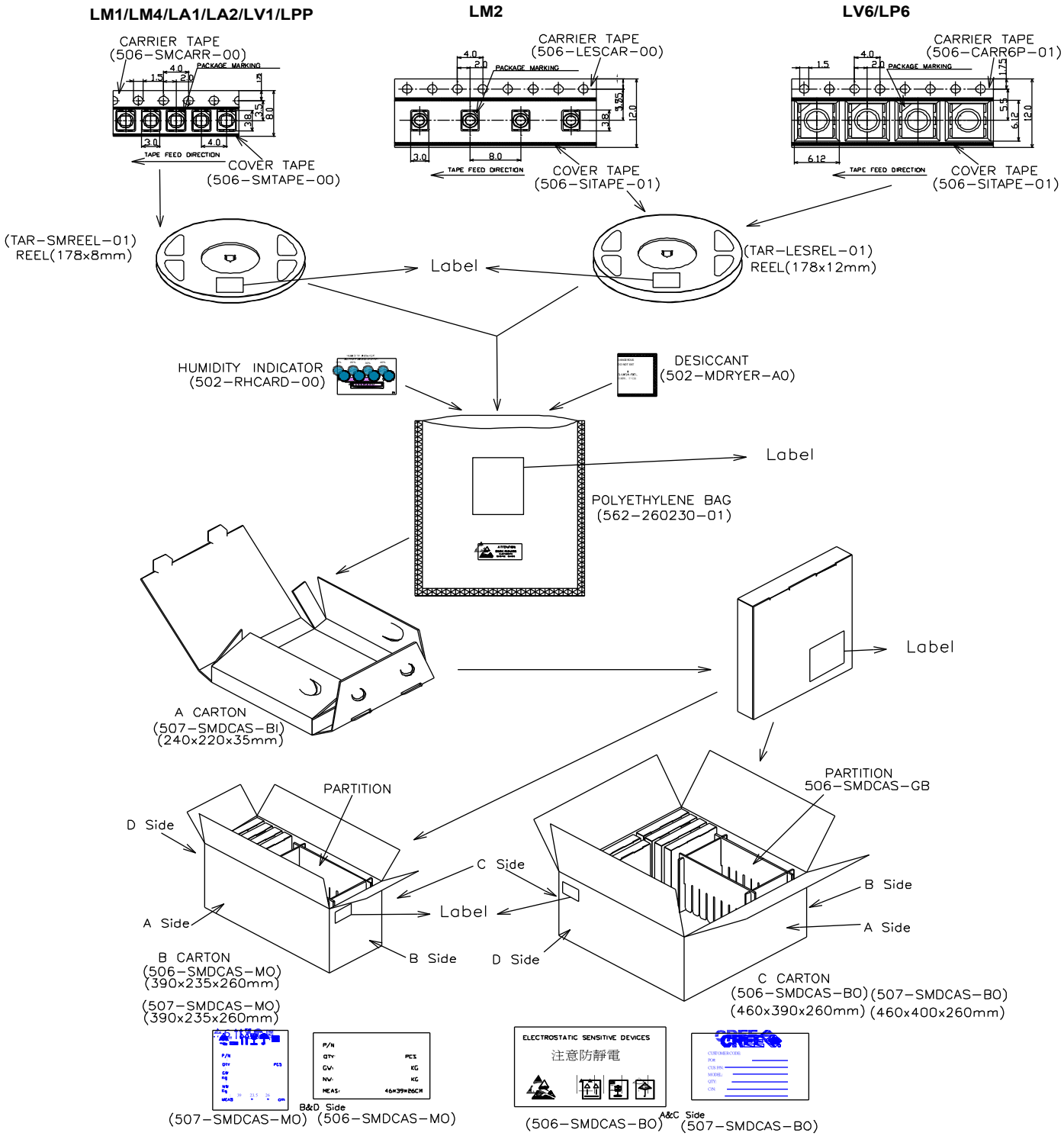

Copyright © 2007-2009 Cree, Inc. All rights reserved. The information in this document is subject to change without notice. Cree, the Cree logo and XLamp are registered trademarks of Cree, Inc.

Cree, Inc.
4600 Silicon Drive
Durham, NC 27703
USA Tel: +1.919.313.5300
www.cree.com/ledlamps

LN6 SMD

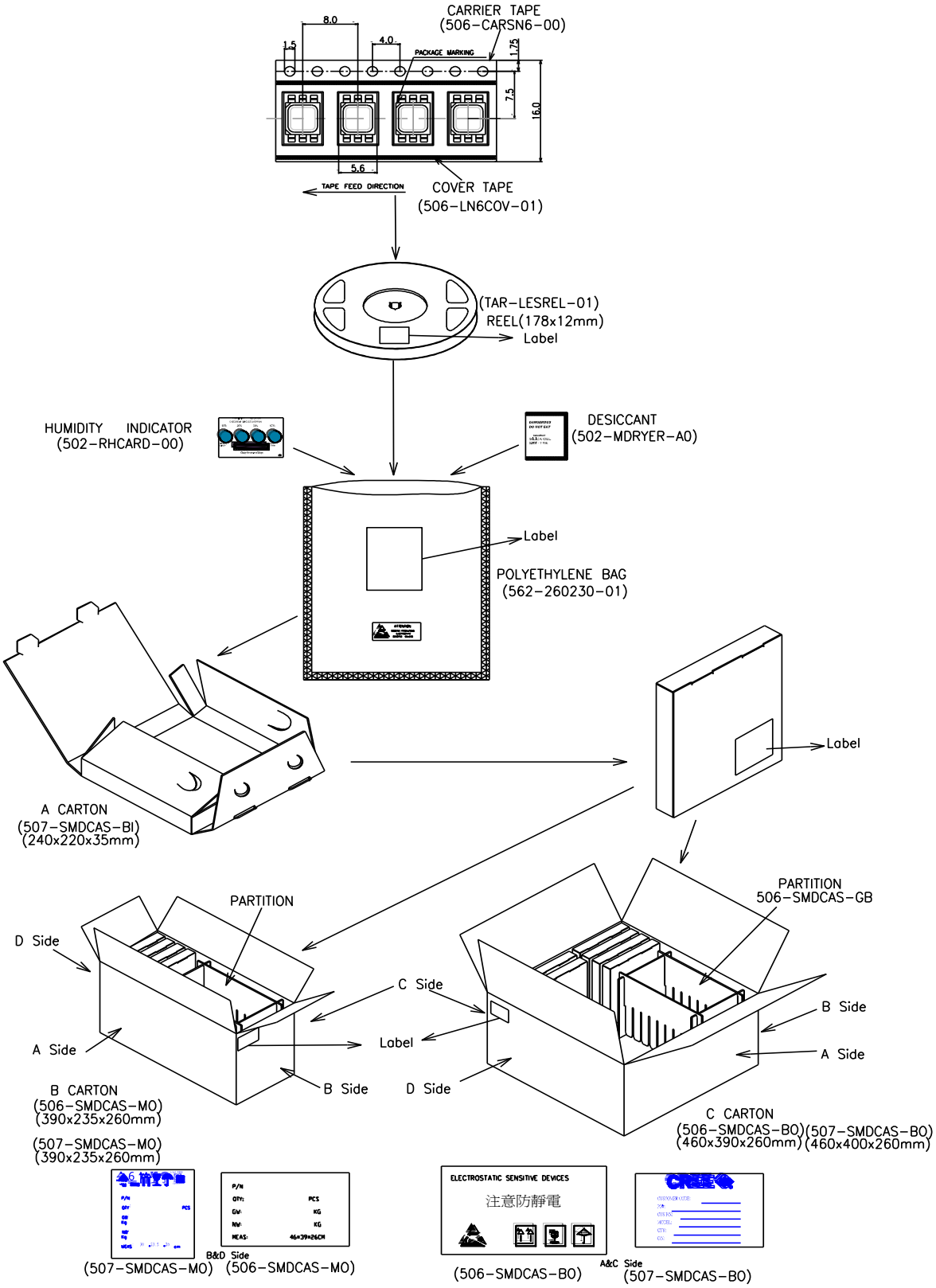

Copyright © 2007-2009 Cree, Inc. All rights reserved. The information in this document is subject to change without notice. Cree, the Cree logo and XLamp are registered trademarks of Cree, Inc.

Cree, Inc.
4600 Silicon Drive
Durham, NC 27703
USA Tel: +1.919.313.5300
www.cree.com/ledlamps