LCD MODULE SPECIFICATION

MODEL NO.

BP320240A series

FOR MESSRS:

_____

ON DATE OF:

_____

APPROVED BY:

_____

C O N T E N T S

1. Numbering System
2. General Specification
3. Absolute Maximum Ratings
4. Electro-optical Characteristics
5. Interface Description
6. Block Diagram
7. Power supply for LCD Module and LCD operating voltage adjustment
8. Backlight information
9. Timing characteristics
10. Quality
11. Reliability
12. Handling Precautions
13. Appendix (Drawing)
    Drawing

1. Numbering System

B	P	320240	A	F	P	B	_	H	xxx
0	1	2	3	4	5	6	7	8	9

0	Brand		Bolymin	
1	Module Type		C= character type G= graphic type P= TAB/TCP type	O= COG type F= COF type
2	Format		2002=20 characters, 4 lines 12232= 122 x 32 dots	
3	Version No.		A type	
4	LCD Color		G=STN/gray Y=STN/yellow-green C=color STN	B=STN/blue F=FSTN T=TN
5	LCD Type		R=positive/reflective P=positive/transflective	M=positive/transmissive N=negative/transmissive
6	Backlight type/color		L=LED array/ yellow-green H=LED edge/white R=LED array/red G=LED edge/yellow-green	D=LED edge/blue E=EL/white B=EL/blue C=CCFL/white
7	CGRAM Font (applied only on character type)		J=English/Japanese Font E=English/European Font	C=English/Cyrillic Font H=English/Hebrew Font
8	View Angle/ Operating Temperature		B=Bottom/Normal Temperature H=Bottom/Wide Temperature U=Bottom/Ultra wide Temperature	T=Top/Normal Temperature W=Top/Wide Temperature C=9H/Normal Temperature
9	Special Code		3=3 volt logic power supply n=negative voltage for LCD c=cable/connector xxx=to be assigned on data sheet	t=temperature compensation for LCD p=touch panel

2. General Specification

(1) Mechanical Dimension

Item	Dimension		Unit
Number of Dots	320 x 240		dots
Module dimension (W*H*T)	**EL type**		mm
	92.2*73.3* 6.5 (max)- EL B/L 92.2*73.3*7.8 (max)-Touch panel		
View area	81.4*62.2		mm
Active area	76.78*57.58		
Dot size	0.225x 0.225		mm
Dot pitch	0.24 x 0.24		mm

(2) Controller IC: No built-in controller (Recommended controller: SED1335)

(3) Temperature Range

	Normal	Wide
Operating	0 ~+50℃	-20 ~+70℃
Storage	-10 ~+60℃	-30 ~+80℃

3. Absolute Maximum Ratings

Item	Symbol	Min	Typ	Max	Unit
Operating Temperature	T_{OP}	0	—	+50	℃
Storage Temperature	T_{ST}	-20	—	+70	℃
Input Voltage	V_I	-0.3	—	VDD+0.3	V
Supply Voltage For Logic *	VDD-VSS	-0.3	3.3	7.0	V
Supply Voltage For LCD	VADJ-VSS	-0.3	—	40.0	V

4. Electro-optical Characteristics

Parameter	Symbol	Condition	Min	Typ	Max	Unit	Note
----- Electronic Characteristics -----							
Logic Circuit Supply Voltage	V_{DD}-V_{SS}	--	2.7	3.3	5.5	V	
LCD Driving Voltage (25°C)	V_{ADJ}-V_{SS}	25°C		21.6		V	
Input Voltage	V_{IH}	--	0.8 V_{DD}	--	V_{DD}	V	
	V_{IL}	--	V_{SS}	--	0.2 V_{DD}	V	
Logic Supply Current(B/L off)	I_{DD}	V_{DD} = 5V	1.5	1.6	2.0	mA	
IEL Supply Current(B/L on)	I_{EL}	V_{EL} = 5V	--	35	--	mA	
----- Optical Characteristics -----							
Contrast	CR	25°C	4.19	4.28	4.33		Note 1
Rise Time	Tr	25°C	216	242	269	ms	Note 2
Fall Time	Tf	25°C	95	113	125	ms	
Viewing Angle Range	θ1	25°C & CR≥2	37	37	38	Deg.	Note 3
	θ2		30	30	30		
	ϕ1		37	38	40		
	ϕ2		35	37	39		
Frame Frequency	fF	25°C	--	64	--	Hz	

Note 1 Contrast ratio :

CR = (Brightness in OFF state) / (Brightness in ON state)

Note 2 Response time :

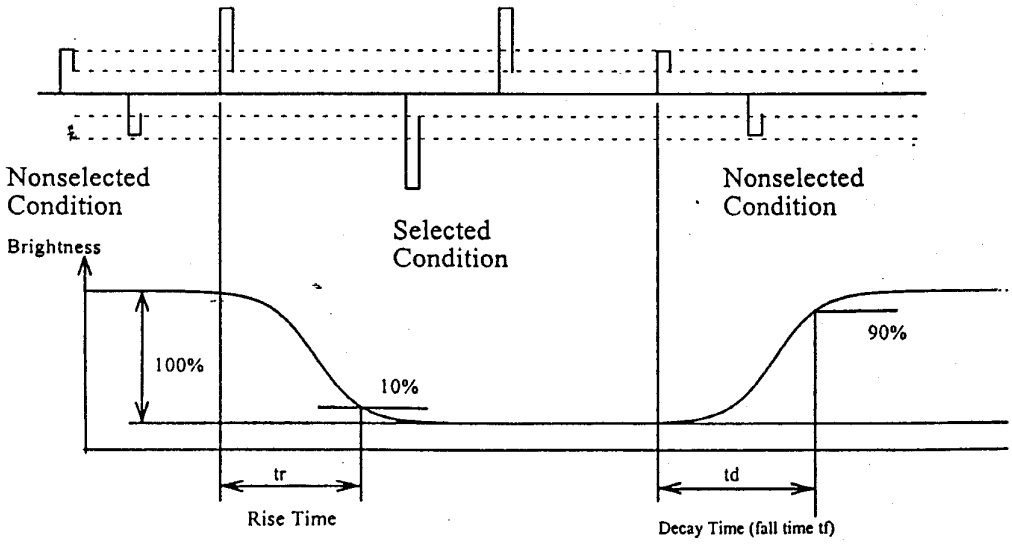

Note3 Viewing angle

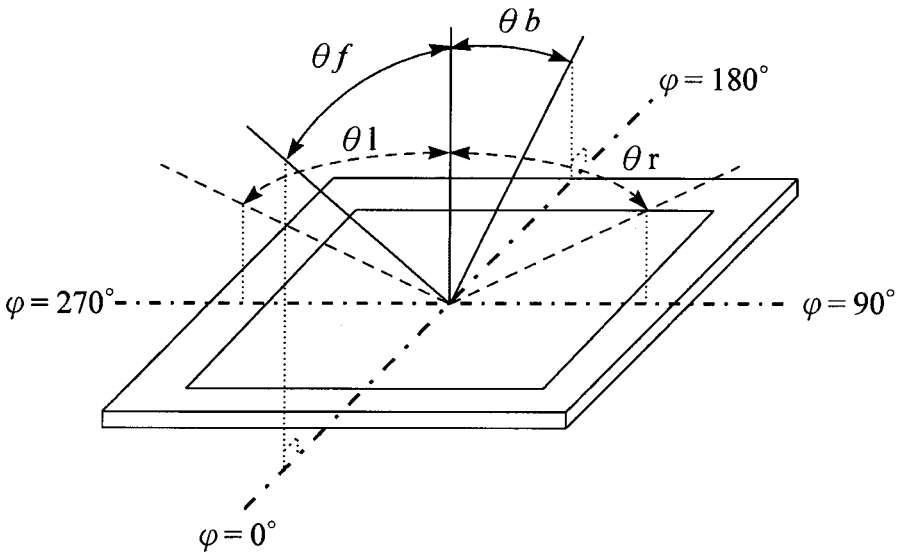

5. Interface Description

Pin No.	Signal	Level	Function
1	CL2(CP)	H/L	Data Shift Clock
2	CL1(LP)	H/L	Data Latch Clock
3	FLM	H/L	First Line Marker
4	M	--	Alternate signal
5~8	D0~D3	H/L	Data Input(4 bits)
9	Vee(Vadj)		Contrast adjust +16V (Vee-Vss)
10	VDD	-	Power Supply for Logic (+3.3)
11	VSS	-	Power Supply (GND)
12	EL B/L-ON	-	EL Backlight control H:on L:OFF(EL only)
13	VEL-G	0V	Power supply for EL inverter V-
14	VEL	3~5V	Power supply for EL inverter V-

6. Block Diagram

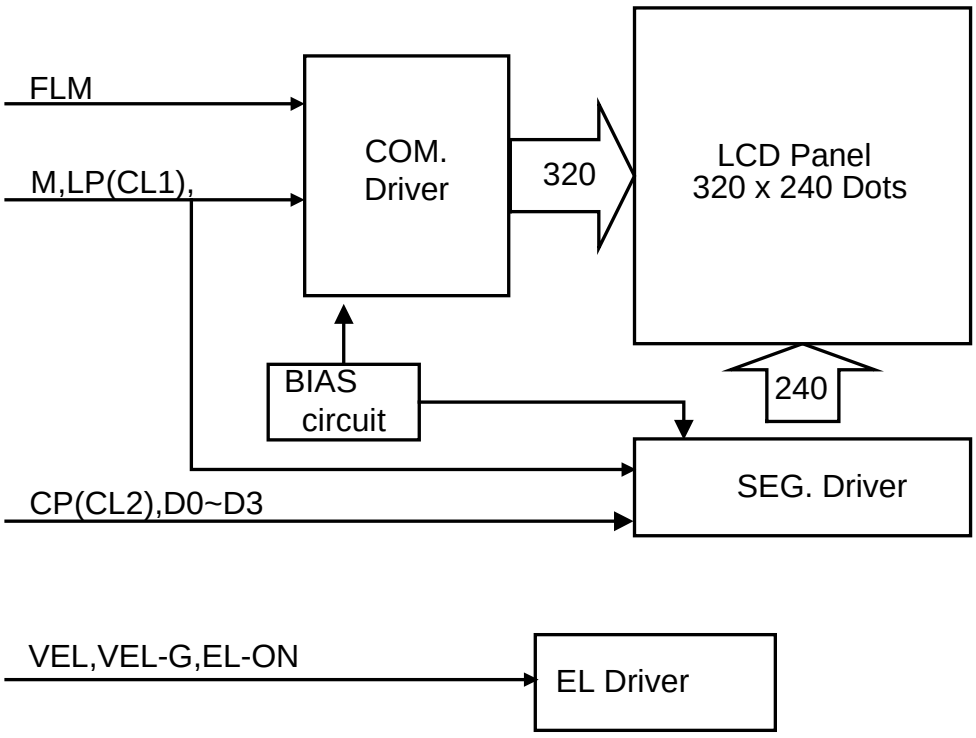

7. Power Supply for LCD Module and LCD Operating Voltage a Adjustment

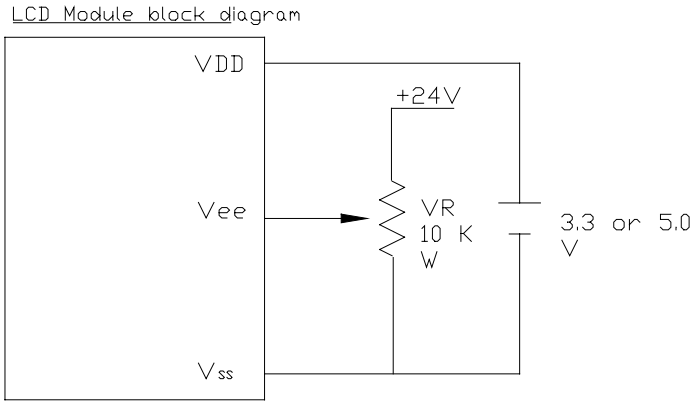

8. Backlight Information

8.1 Specification

EL / white

Parameter	Specification	Unit
Color	White	-
Voltage	Vrms = 60	V(AC)
Frequency	Sine Wave = 380	Hz
Current Density	0.12	mA / cm^2
Bare EL Initial Brightness	15	cd / m^2
LCM Initial Brightness	5	cd / m^2

8.2 Backlight driving methods

a. EL B/L driven

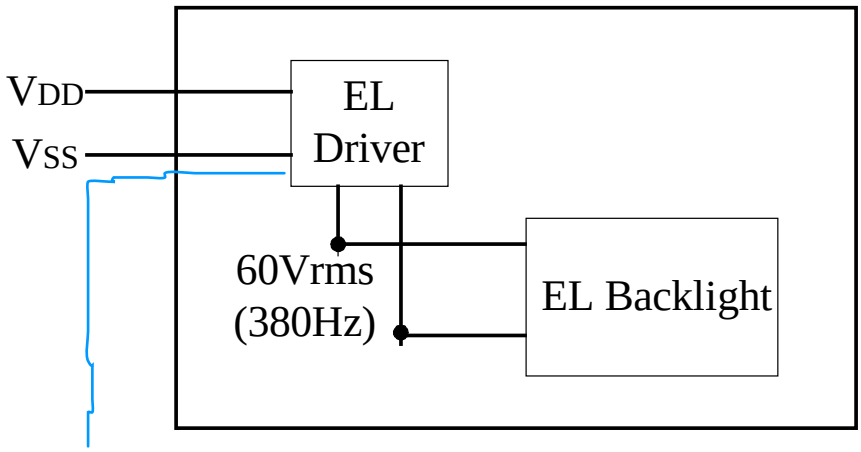

Control by “ELB/L-ON”

9.Timing Characteristics

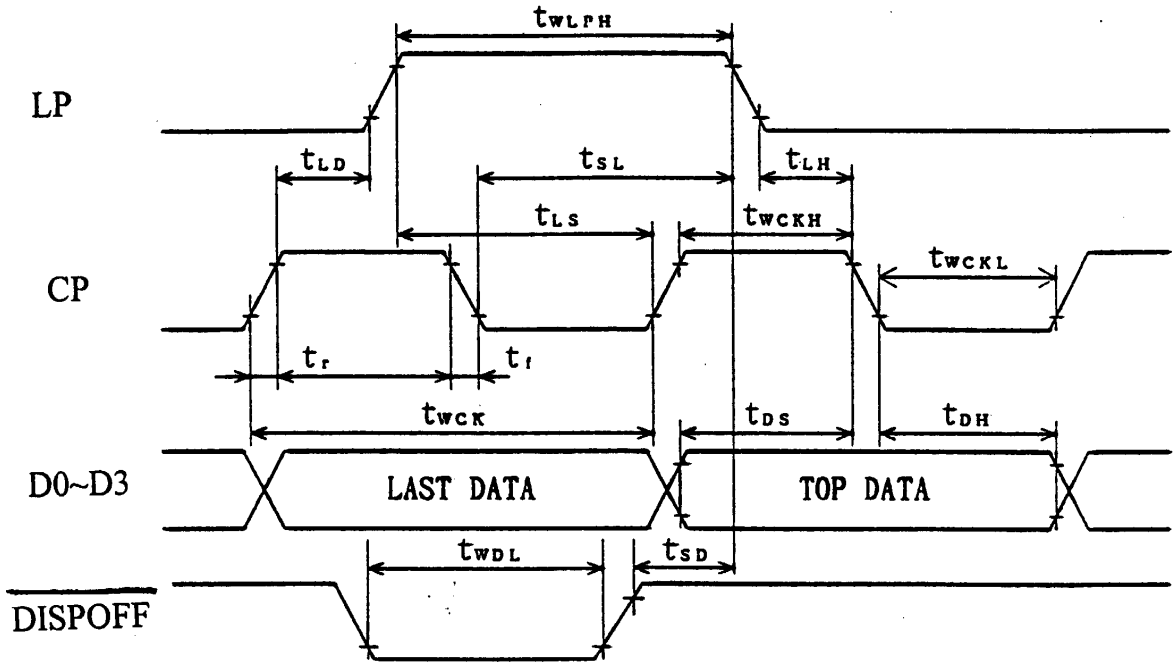

VDD = 4.5V to 5.5V

Parameter	Symbol	Condition	Min	Max	Unit
Shift Clock Period	t_{WCK}	Tr, Tf ≤ 10ns	50		ns
Clock Width “H” Pulse Width	t_{WCKH}		15		ns
Clock Width “L” Pulse Width	t_{WCKL}		15		ns
Data Set Up Time	t_{DS}		10		ns
Data Hold Time	t_{DH}		12		ns
Latch Pulse “H” Pulse Width	t_{WLPH}		15		ns
Shift Clock to Latch Pulse Rise Time	t_{LD}		0		ns
Shift Clock to Latch Pulse Fall Time	t_{SL}		30		ns
Latch Pulse to Shift Clock Rise Time	t_{LS}		25		ns
Latch Pulse to Shift Clock Fall Time	t_{LH}		25		ns
Input Signal Rise/Fall Time	tr,tf			50	ns
/DISPOFF Removal Time	t_{SD}		100		ns
/DISPOFF “L” Pulse Width	t_{WDL}		1.2		ns

VDD = 3.0V to 4.5V

Parameter	Symbol	Condition	Min	Max	Unit
Shift Clock Period	t_{WCK}	Tr, Tf ≤ 10ns	66		ns
Clock Width “H” Pulse Width	t_{WCKH}		23		ns
Clock Width “L” Pulse Width	t_{WCKL}		23		ns
Data Set Up Time	t_{DS}		15		ns
Data Hold Time	t_{DH}		23		ns
Latch Pulse “H” Pulse Width	t_{WLPH}		30		ns
Shift Clock to Latch Pulse Rise Time	t_{LD}		0		ns
Shift Clock to Latch Pulse Fall Time	t_{SL}		50		ns
Latch Pulse to Shift Clock Rise Time	t_{LS}		30		ns
Latch Pulse to Shift Clock Fall Time	t_{LH}		30		ns
Input Signal Rise/Fall Time	tr,tf			50	ns
/DISPOFF Removal Time	t_{SD}		100		ns
/DISPOFF “L” Pulse Width	t_{WDL}		1.2		ns

9.1 Controller Interface Timing Chart

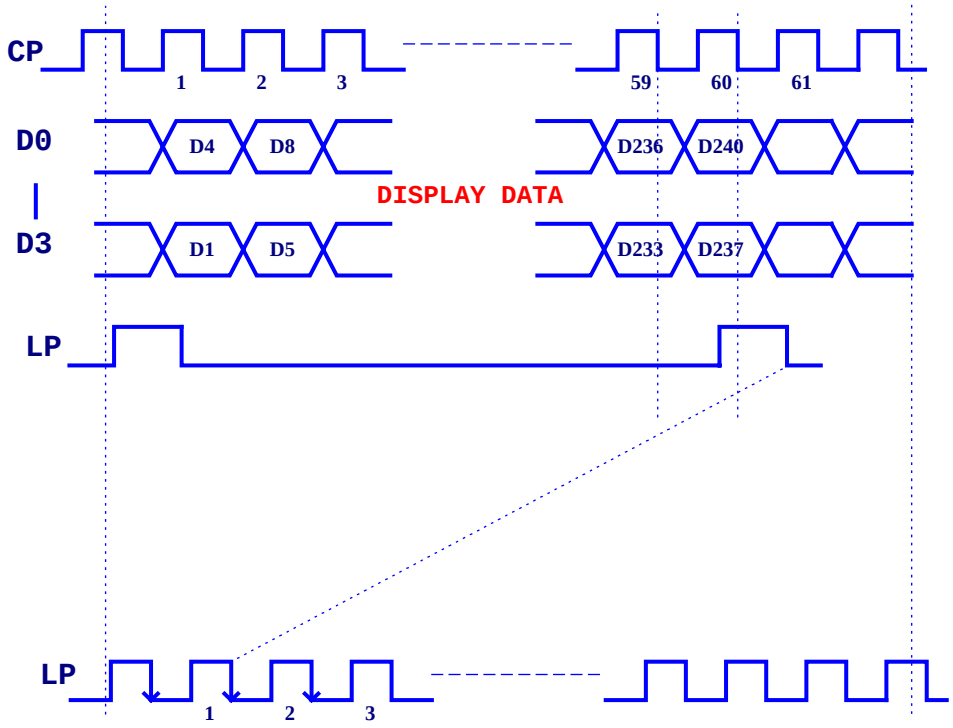

9.2 Display Data Format(default)

SEG1 → SEG320

#1	**D3**	D2	D1	D0	D3	D2			-			D3	D2	D1	D0
#2	D3	D2	D1	D0	D3	D2						D3	D2	D1	D0
#240	D3	D2	D1	D0	D3	D2						D3	D2	D1	D0

Landscape Display Type(Top View)

9.3 Power ON/OFF Sequence

Please maintain the blow sequence when turning on and off the power supply of the module. If /DISPOFF is supplied to the module while internal alter signal for LCD driving (M) is unstable, DC component will be supplied to the LCD panel. This may cause damage the LCD module.

POWER ON SEQUENCE

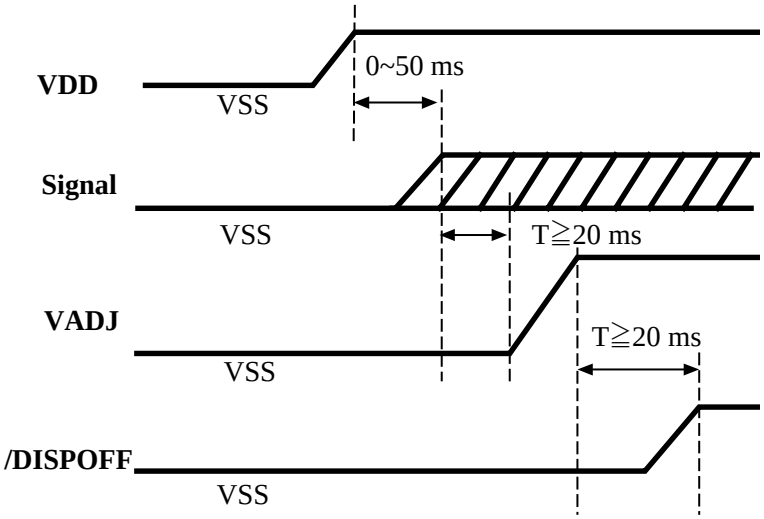

POWER OFF SEQUENCE

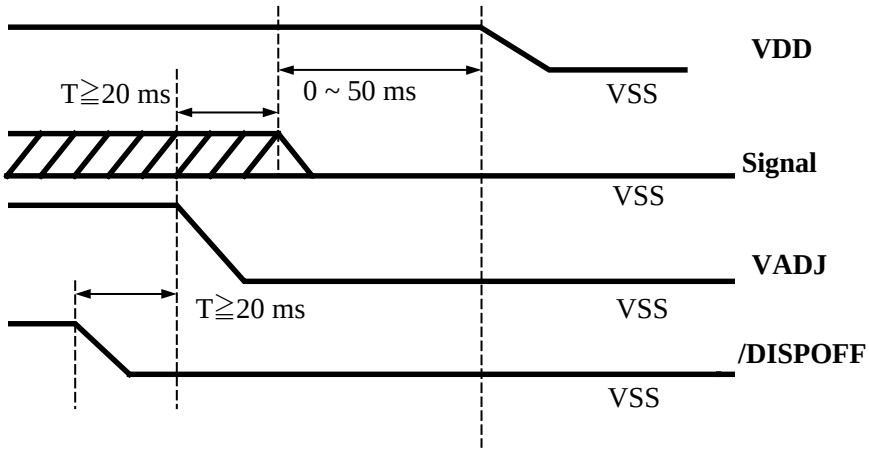

10. Quality

10-1. Test Conditions

Tests should be conducted under the following conditions：

Ambient temperature ： 25±5°C

Humidity ： 60±25% RH.

10-2. Sampling Plan

Sampling method shall be in accordance with MIL-STD-105E, inspection level II, normal inspection, and single sampling plan tables for normal, tightened, and reduced inspection.

10-3. Acceptable Quality Level

A major defect is defined as one that could cause failure to or materially reduce the usability of the unit for its intended purpose. A minor defect is one that does not materially reduce the usability of the unit for its intended purpose or is an infringement from established standards and has no significant bearing on its effective use or operation.

10-4. Appearance

An appearance test should be conducted by human sight at approximately 30 cm distance from the LCD module under flourescent light. The inspection area of LCD panel shall be within the range of following limits.

10-5. Inspection Quality Criteria

Item	Description of defects			Class of Defects	Acceptable level (%)
Function	Short circuit or Pattern cut			Major	0.65
Dimension	Deviation from drawings			Major	1.5
Black spots	Ave . dia . D	area A	area B	Minor	2.5
	D≦0.2	Disregard			
	0.2<D≦0.3	3	4		
	0.3<D≦0.4	2	3		
	0.4<D	0	1		
Black lines	Width W, Length L	A	B	Minor	2.5
	W≦0.03	disregard			
	0.03<W≦0.05	3	4		
	0.05<W≦0.07 , L≦3.0	1	1		
	See line criteria				
Bubbles in polarizer	Average diameter D 0.2 < D < 0.5 mm for N = 4 , D > 0.5 for N = 1			Minor	2.5
Color uniformity	Rainbow color or newton ring.			Minor	2.5
Glass Scratches	Obvious visible damage.			Minor	2.5
Viewing angle	See note 3			Minor	2.5
Contrast ratio	See note 1			Minor	2.5
Response time	See note 2			Minor	2.5

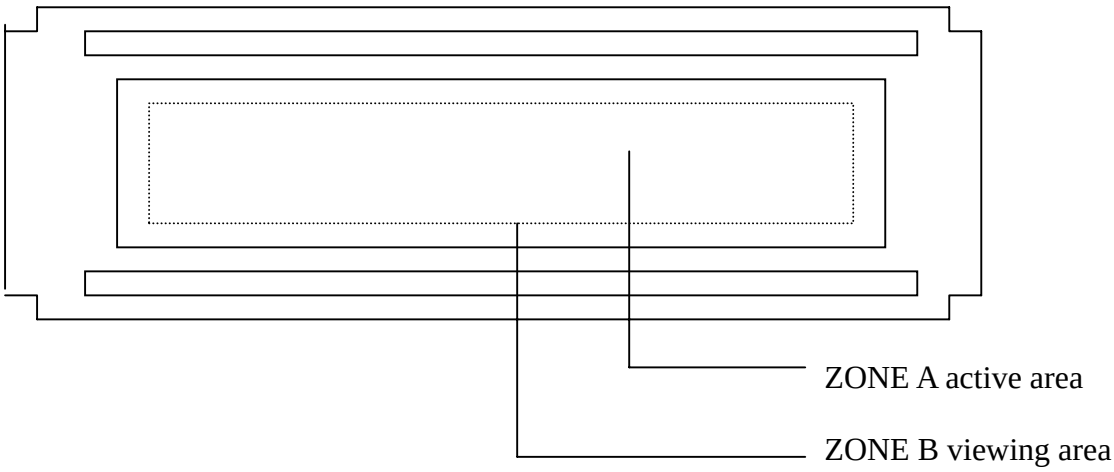

11. Reliability

Test Item	Test Conditions	Note
High Temperature Operation	50±3°C , t=96 hrs	
Low Temperature Operation	0±3°C , t=96 hrs	
High Temperature Storage	70±3°C , t=96 hrs	1,2
Low Temperature Storage	-20±3°C , t=96 hrs	1,2
Humidity Test	40 °C, Humidity 90%, 96 hrs	1,2
Thermal Shock Test	-20°C (30 min.) ~ 25°C (5 min.) ~ 70°C (30 min.) (1 cycle) Total 5 cycle	1,2
Vibration Test (Packing)	Sweep frequency：10 55 10 Hz/1min Amplitude：0.75mm Test direction：X.Y.Z/3 axis Duration：30min/each axis	2

Note 1：Condensation of water is not permitted on the module.

Note 2：The module should be inspected after 1 hour storage in normal conditions (15-35°C , 45-65%RH).

Definitions of life end point：

- Current drain should be smaller than the specific value.
- Function of the module should be maintained.
- Appearance and display quality should not have degraded noticeably.
- Contrast ratio should be greater than 50% of the initial value.

12 Handling Precautions

(1) An LCD module is a fragile item and should not be subjected to strong mechanical shocks.

(2) Avoid applying pressure to the module surface. This will distort the glass and cause a change in colour.

(3) Under no circumstances should the position of the bezel tabs or their shape be modified.

(4) Do not modify the display PCB in either shape or positioning of components.

(5) Do not modify or move location of the zebra or heat seal connectors.

(6) The device should only be soldered to during interfacing. Modification to other areas of the board should not be carried out.

(7) In the event of LCD breakage and resultant leakage of fluid do not inhale, ingest or make contact with the skin. If contact is made rinse immediately.

(8) When cleaning the module use a soft damp cloth with a mild solvent, such as Isopropyl or Ethyl alcohol. The use of water, ketone or aromatic is not permitted.

(9) Prior to initial power up input signals should not be applied.

(10) Protect the module against static electricity and observe appropriate anti-static precautions.
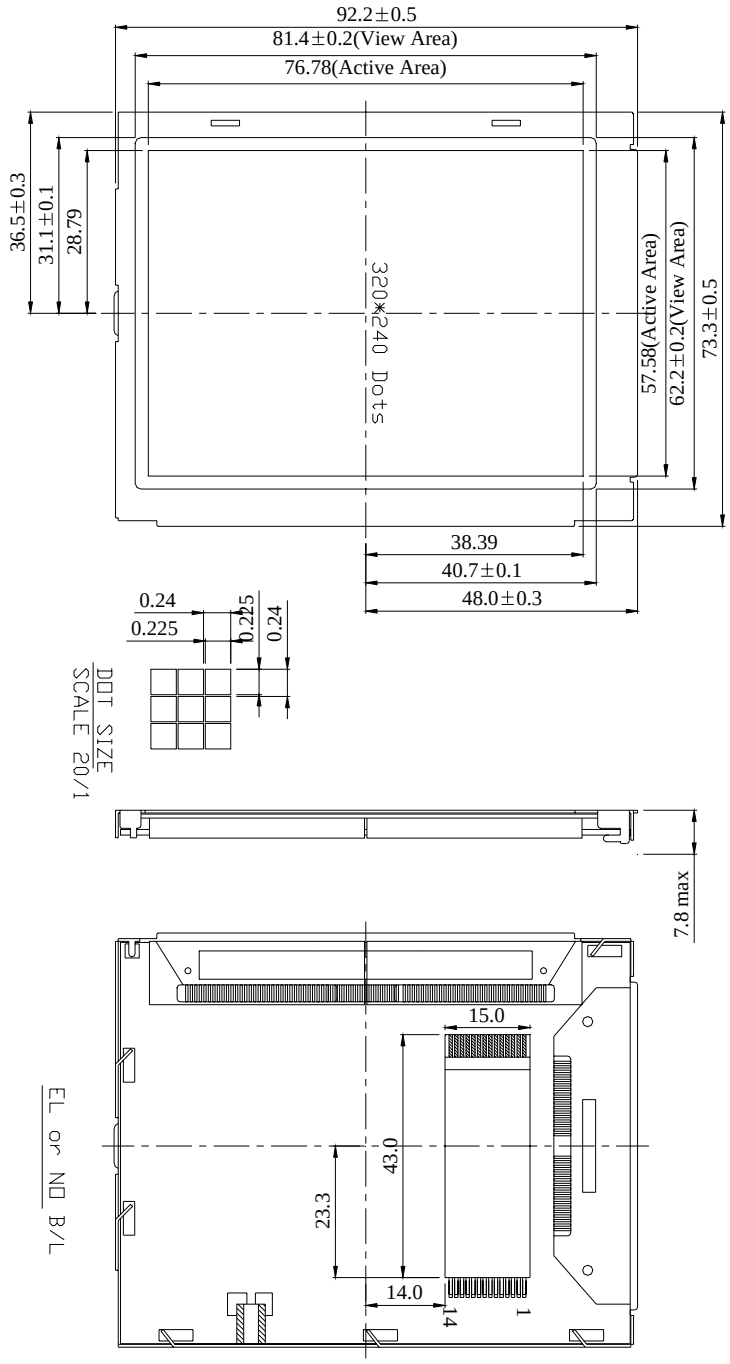
13. Appendix (Drawing ,)