# ADNK-3533-TN24
Optical Mouse Designer's Kit

# Design Guide

## Introduction

This design guide describes the design of a low power consumption optical mouse using the new Avago Technologies ADNB-3532 low power small form factor optical mouse sensor, Texas Instruments MSP430F1222 microcontroller and Nordic Semiconductor nRF2402 2.4GHz RF transmitter. The receiver dongle is implemented with a Nordic Semiconductor nRF2401A 2.4GHz RF transceiver in conjunction with a Cypress CY7C63231A enCoRe™ USB controller. This reference design kit provides a power efficient and feature-rich solution in one small and slim package.

The design guide discusses the reference design hardware and firmware implementation. The document starts with the basic operations of a computer mouse peripheral followed by an introduction to the Avago ADNS-3530 low power optical mouse sensor, the Nordic Semiconductor nRF2402 transmitter and nRF2401A transceiver, Texas Instruments MSP430F1222 microcontroller. The software section of this application note describes the architecture of the firmware required to implement the mouse and the USB dongle functions. Included in Appendix A is the schematic for this reference design mouse and USB dongle.

The ADNK-3533-TN24 low power slim optical mouse utilizes the ADNB-3532 low power Light Emmiting Diode (LED) slim mouse sensor bundle. The LED mouse bundle is a small form factor (SFF) LED illuminated navigation system. The bundle consists of an integrated chip-on-board (COB) LED mouse sensor ADNS-3530 and a SFF lens ADNS-3150-001.

The ADNS-3530 is a low- power optical navigation sensor. It has a new, low-power architecture and automatic power management modes, making it ideal for battery- and power-sensitive applications such as cordless input devices.

The ADNS-3530 is capable of high-speed motion detection – up to 20ips and 8G. In addition, it has an on-chip oscillator and integrated LED to minimize external components.

The ADNS-3530 along with the ADNS-3150-001 lens form a complete and compact mouse tracking system. There are no moving parts which means high reliability and less maintenance for the end user. In addition, precision optical alignment is not required, facilitating high volume assembly.

The bundle sensor is programmed via registers through a four-wire serial port. It is packaged in a 16 I/O surface mountable package.

## Introduction to ADNS-3530 Optical Mouse Sensor

The ADNS-3530 is based on Optical Navigation Technology, which measures changes in position by optically acquiring sequential surface images (frames) and mathematically determining the direction and magnitude of movement.

The ADNS-3530 contains an Image Acquisition System (IAS), a Digital Signal Processor (DSP), and a four wire serial port.

The IAS acquires microscopic surface images via the lens and illumination system. These images are processed by the DSP to determine the direction and distance of motion. The DSP calculates the $\Delta x$ and $\Delta y$ relative displacement values.

An external microcontroller reads the $\Delta x$ and $\Delta y$ information from the sensor serial port. The microcontroller then translates the data into PS2, USB, or RF signals before sending them to the host PC or game console.

To learn more about sensor's technical information, please visit the Avago web site at **http://www.avagotech.com/**

## Texas Instrument MSP430F1222 Microcontroller

The Texas Instruments MSP430 family of ultra-low power microcontrollers consists of several devices featuring different sets of peripherals targeted for various applications. The architecture, combined with five low-power modes, is optimized to achieve extended battery life in portable measurement applications. The device features a powerful 16-bit RISC CPU, 16-bit registers, and constant generators that attribute to maximum code efficiency. The Digitally Controlled Oscillator (DCO) allows wake-up from low-power modes to active mode in less than 6 µsec.

The specific device used in this reference design is the MSP430F1222 with 28 pin to accommodate ample amount of I/O. It is an ultra-low power mixed-signal microcontrollers with a built-in 16-bit timer, 10-bit A/D converter with integrated reference and Data Transfer Controller (DTC), and 14 (20 pin package) or 22 (28 pin package) general purpose I/O pins. The MSP430x12x2 series microcontrollers have built-in communication capability using asynchronous (UART) and synchronous (SPI) protocols. The architecture, combined with five low power modes is optimized to achieve extended battery life on wireless application.

## Features

- Low Supply Voltage Range 1.8 V to 3.6 V
- Ultra Low-Power Consumption:
  – Active Mode: 200 µA at 1 MHz, 2.2 V
  – Standby Mode: 0.7 µA
  – Off Mode (RAM Retention): 0.1 µA
- Five Power Saving Modes
- Wake-Up From Standby Mode in less than 6 µs
- 16-Bit RISC Architecture, 125 ns Instruction Cycle Time
- Basic Clock Module Configurations:
  – Various Internal Resistors
  – Single External Resistor
  – 32-kHz Crystal
  – High Frequency Crystal
  – Resonator
  – External Clock Source
- 16-Bit Timer_A With Three Capture/Compare Registers
- 10-Bit, 200-ksps A/D Converter With Internal Reference, Sample-and-Hold, Autoscan, and Data Transfer Controller
- Serial Communication Interface (USART0) With Software-Selectable Asynchronous UART or Synchronous SPI
- Serial Onboard Programming, No External Programming Voltage Needed Programmable Code Protection by Security Fuse
- Supply Voltage Brownout Protection
- 4KB + 256B Flash Memory 256B RAM
- Available in 28-Pin Plastic SOWB, 28-Pin Plastic TSSOP, and 32-Pin QFN Packages

For Complete Module Descriptions, See the TI MSP430x1xx Family User's Guide, Literature Number SLAU049

## Nordic Semiconductor nRF2402 2.4GHz Transmitter and nRF2401A 2.4GHz Transceiver

The Nordic nRF2402 and nRF2401A are the low-power, single-chip radio transmitter and transceiver for the world wide 2.4 - 2.5 GHz ISM band. The entire transmitter and transceiver including all inductors and filters are integrated in each single chip respectively which gives the lowest cost solution to the end user. All configurations of the nRF2402 transmitter and nRF2401A transceiver are done via a standard serial interface. The nRF devices include the ShockBurst engine which allow for high data rates on air using low data rates between the microcontroller and the nRF device, it will also automatically validate the packets address and CRC, further reducing the microcontrollers processing tasks.

## Features for nRF2402 2.4GHz Transmitter

- True single chip GFSK transmitter in a
- small 16-pin package (QFN16 4x4)
- Adjustable output power up to 0dBm
- Data rate 0 to 1Mbps
- Low Bill of Material
- Multi Channel operation
- 128 channels
- Support frequency hopping
- Channel switching time <200ms.
- Power supply range: 1.9 to 3.6 V
- CRC computation
- ShockBurst™ mode for ultra-low power operation
- Low supply current, typical 10mA peak @ -5dBm output power
- 100% RF tested

## Features for nRF2401A 2.4GHz Transceiver

- True single chip GFSK transceiver in a small 24-pin package (QFN24 5x5mm)
- Data rate 0 to 1Mbps
- Only 2 external components
- Multi channel operation
- 125 channels
- Channel switching time <200ms.
- Support frequency hopping
- Data slicer / clock recovery of data
- Address and CRC computation
- DuoCeiver™ for simultaneous dual receiver topology
- ShockBurst™ mode for ultra-low power operation and relaxed MCU performance
- Power supply range: 1.9 to 3.6 V
- Low supply current (TX), typical 10.5mA peak @ -5dBm output power
- Low supply current (RX), typical 18mA peak in receive mode
- 100 % RF tested
- No need for external SAW filter

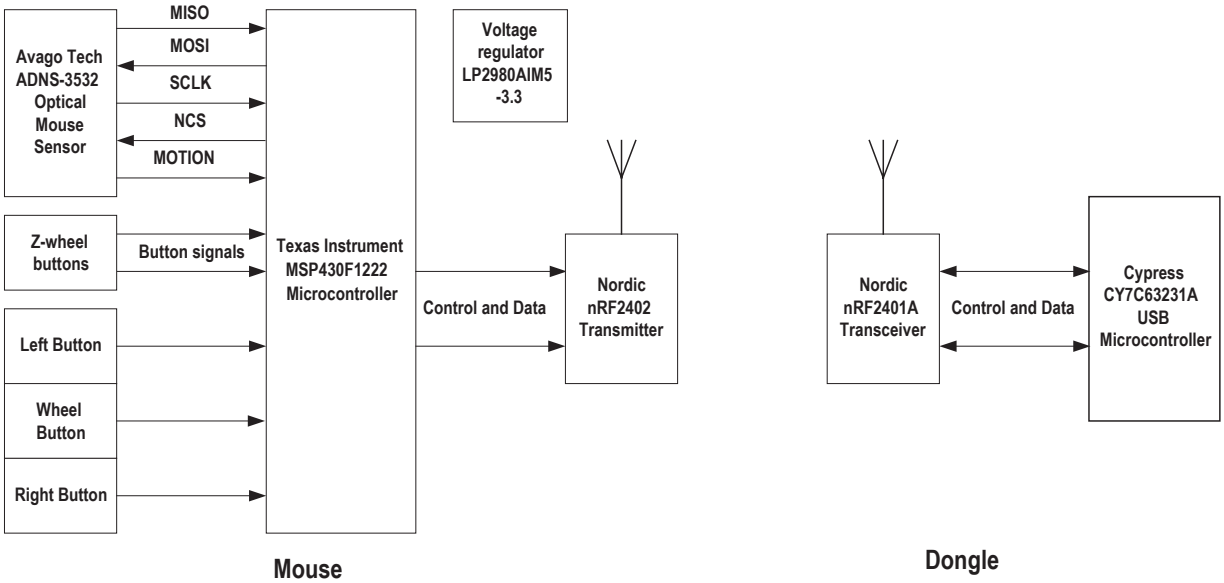


**Figure 1. ADNK-3533-TN24 Reference Design Mouse Functional Block Diagram**

## Mouse Z-wheel and Buttons

Mouse Z-wheel functions are achieved through the use of buttons. This enables the optical mouse to have small and slim form, fit and function.

Mouse buttons are connected as standard switches. These switches are pulled up by the pull up resistors inside the microcontroller. When the user presses a button, the switch will be closed and the pin will be pulled LOW to GND. A LOW state at the pin is interpreted as the button being pressed. A HIGH state is interpreted as the button has been released or the button is not being pressed. Normally the switches are debounced in firmware for 15-20ms. In this reference design there are three switches: left, Z-wheel, and right.

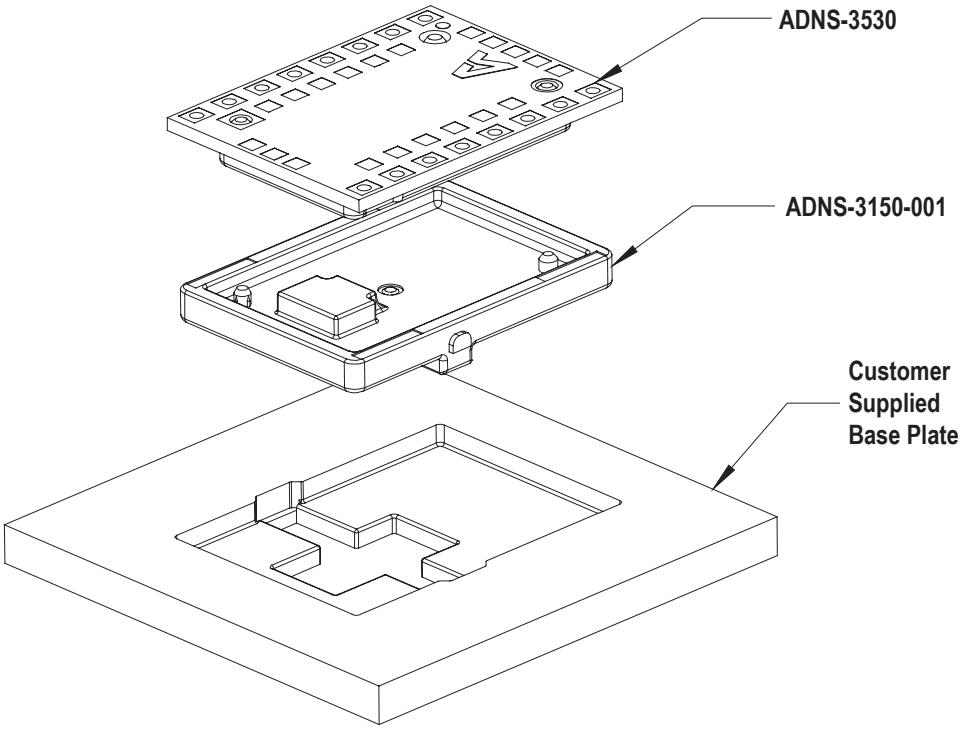


**Figure 2. Exploded view drawing of optical tracking engine with ADNB-3532 optical mouse sensor.**

While reassembling the components, please make sure that the Z height (Distance from lens reference plane to surface) is valid. Refer to Figure 3.

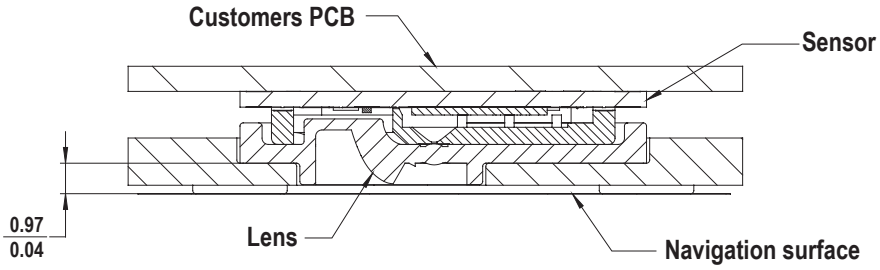


**Figure 3. Distance from lens reference plane to surface**

## Firmware functions

Below is a description of the various firmware subroutines.

**WM430_System.c** – mouse main program featuring nRF2402 transmitter (wm430_transmitter.c), ADNS-3530 sensor (MSP430_AVAGO_ADNS-3530.c), buttons (wm430_button.c) and battery indicator (MSP430_battery_indicator.c) programs.

**wm430_transmitter.c** – this program features RF protocol implementation.

**MSP430_AVAGO_ADNS-3530.c** – this program is for MSP430 device driver functions to communicate with Avago ADNS-3530 optical sensor.

**wm430_button.c** – this program is for button related functions

**MSP430_battery_indicator.c** – this program is for battery indicator functions

**wm430_wheel.c** – this program features the logic implementation for button (ZA & ZB) scrolling movements.

**WM430_sys_intiInternal ( )** – this function is for internal system initialization. It involves GPIO functions, timer A operations and DCO calibration initializations. For hardware SPI pins configuration, MOSI is connected to P3.1, MISO is connected to P3.2, SCL is connected to P3.3, NCS is connected to P1.3, MOTION is connect to P2.2 and SHTDWN is connected to P2.3. Whereas for the NORDIC nRF2402 transmitter, CONTROL 1 is connected to CE, CONTROL 2 is connected to PWR_UP, CONTROL 3 is connected to CS, SCL is connected to CLK and MOSI is connected to DIN.

**WM430_BATTERY_init ( )** – this function is for battery indicator initialization whereby a sample is taken from P2.0 of MSP430F1222 with reference to 2.5V. The ADC10 internal oscillator times sample selected is 16.

**WM430_BUTONS_int ( )** – this function is used to initialize the button module and GPIO functions configurations. The left, right, scroll ZA and scroll ZB buttons are connected to P1.0, P1.2, P2.5 and P2.1 of MPS430F1222 respectively.

**WM430_TX_int ( )** – this function initializes the transmitter software module.

**WM430_SYS_initDevices ( )** – it is used to initialize external devices such as ADNS-3530 and NORDIC nRF2402 transmitter. The product and inverse product IDs of the optical sensor are checked in this function.

**WM430_SYS_generateNewID ( )** – this function is responsible for new ID generation.

**_EINT ( )** – it enables global interrupts

**WM430_SYS_battery_sequence ( )** – this function defines the battery indicator sequence. The led will blink when the battery level is low or medium level and it will not blink when the battery level is full.

**WM430_BUTTONS_processLeft ( )** – it is used to process left button when it is pressed

**WM430_BUTTONS_processRight ( )** – this function is to process the right button when it is pressed.

**WM430_BUTTONS_processZAZBPressed ( )** – it processes the scrolling button(s) when it is pressed continuously.

**WM430_WHEEL_resetActiveTimeout ( )** – this function is for resetting the time out counter to keep scroll button detection enabled. It will extend ACTIVE mode to maximum time if the MCU is already awake.

**WM430_BUTTONS_processZA ( )** – it is used to process scrolling button ZA when it is pressed.

**WM430_BUTTONS_processZB ( )** – it processes scrolling button ZA when it is pressed.

**WM430_WHEEL_decodeZState ( )** – this function is responsible for updating the scrolling button ZA and button ZB directions.

**WM430_TX_sendDataPacket ( )** – this function receives four parameters namely button, X displacement, Y displacement and Z displacement data. Then they are transmitted to the NORDIC nRF2401AG receiver.

**WM430_SYS_clearWatchDog ( )** – this function is used to reset the watch dog timer to prevent the hardware reset.

**WM430_BUTTONS_configureInterrupts ( )** – it determines the state of the buttons and configures each button interrupt for rising or falling edge detection.

**WM430_BUTTONS_checkRelease ( )** – this function is used to check whether any of the buttons have been released.

**WM430_SYS_enableSensorINT ( )** – this function is used for enabling the sensor motion interrupt.

**WM430_SYS_disableSensorInt ( )** – it is used to disable the sensor motion interrupt.

**MSP430_NORDIC_nRF2402_powerDown ( )** – this function is called to power down the NORDIC nRF2402 device.

**MSP430_NORDIC_nRF2402_powerUp ( )** – it is called to power up the NORDIC nRF2402 device.

The firmware block diagram is shown in Figure 4.

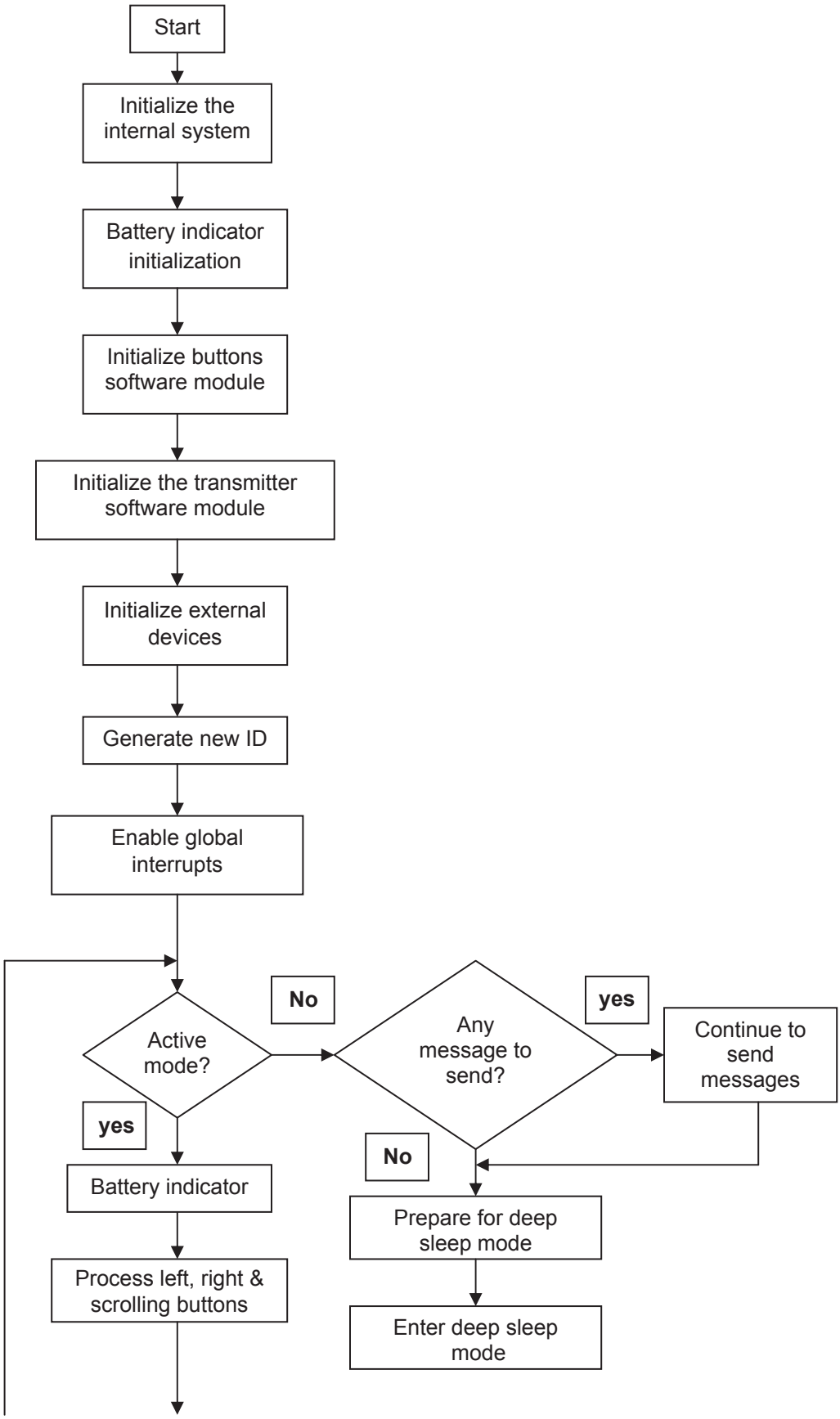


**Figure 4. Firmware Block Diagram (Part 1)**

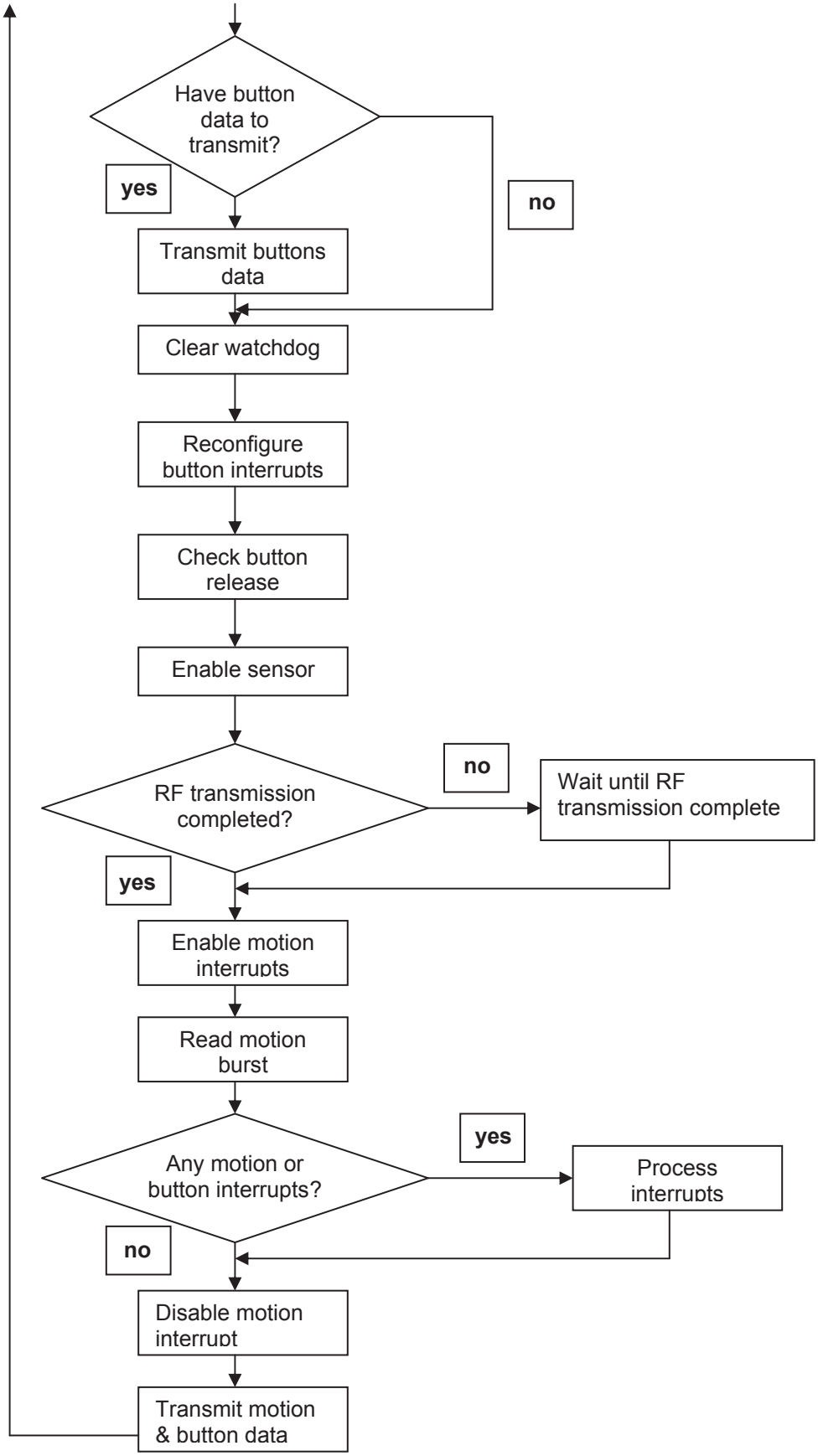


**Figure 4. Firmware Block Diagram (Part 2)**

### Base Plate Feature – IGES File

The IGES file on the CD-ROM provides recommended base plate molding features to ensure optical alignment

### Reference Design Documentation – Gerber File

The Gerber File presents detailed schematics used in ADNK-3533-TN24 in PCB layout form. See Appendix C for more details.

### Overall circuit

A schematic of the overall circuit is shown in Appendix A of this document. Appendix B lists the bill of materials.

## Appendix A: Schematic Diagram of the Overall Circuit

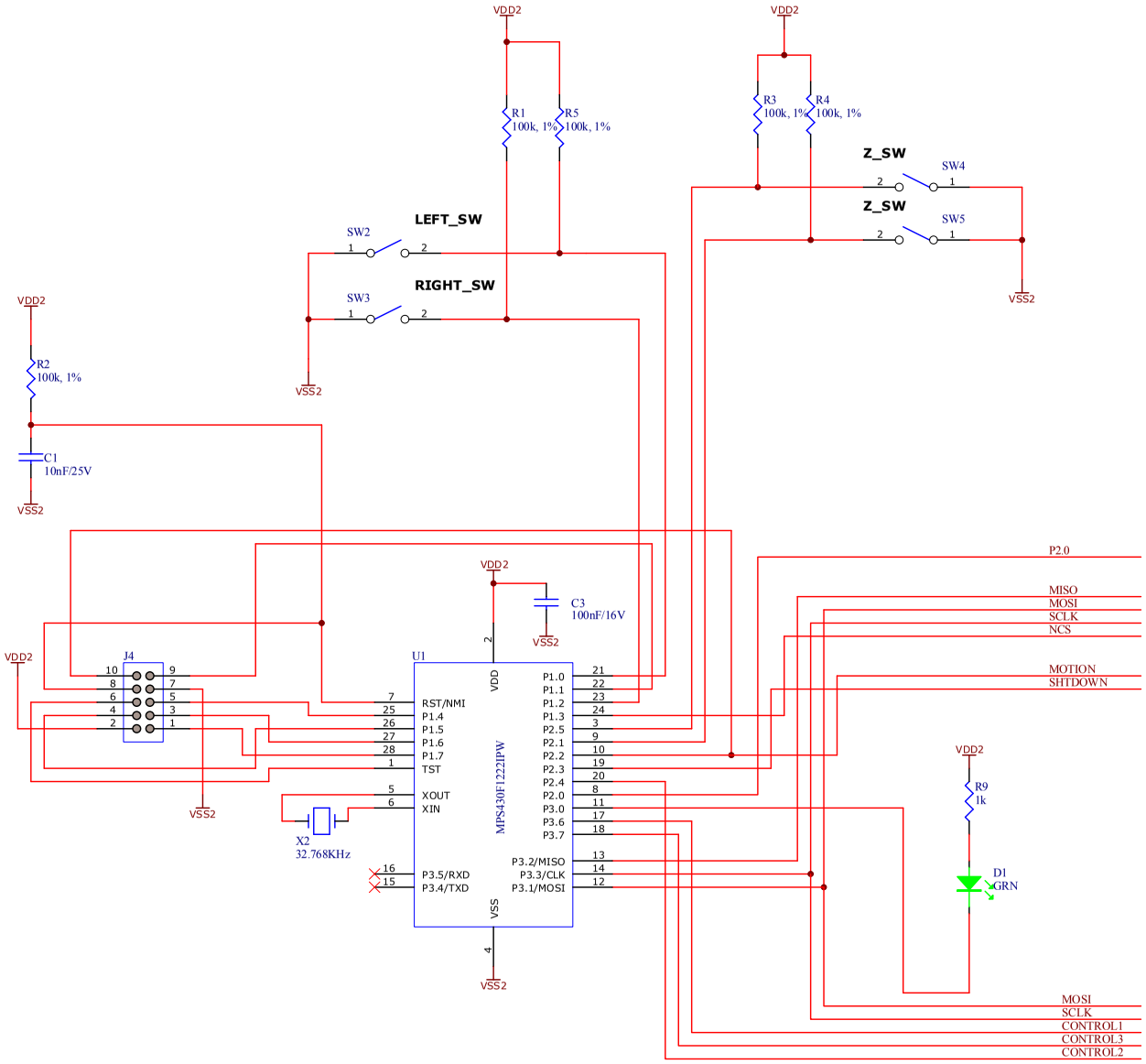


**Figure A1. Circuit-level for MSP430F.**

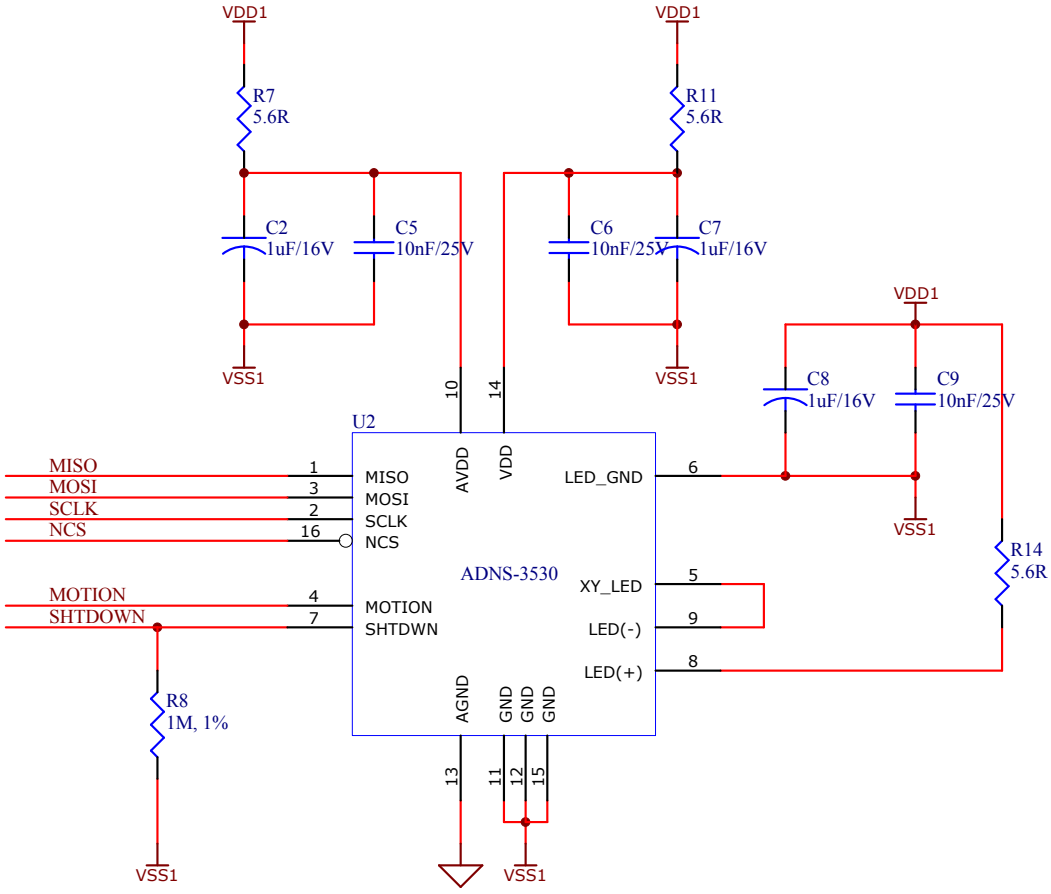


**Figure A2. Circuit-level for ADNS-3530.**

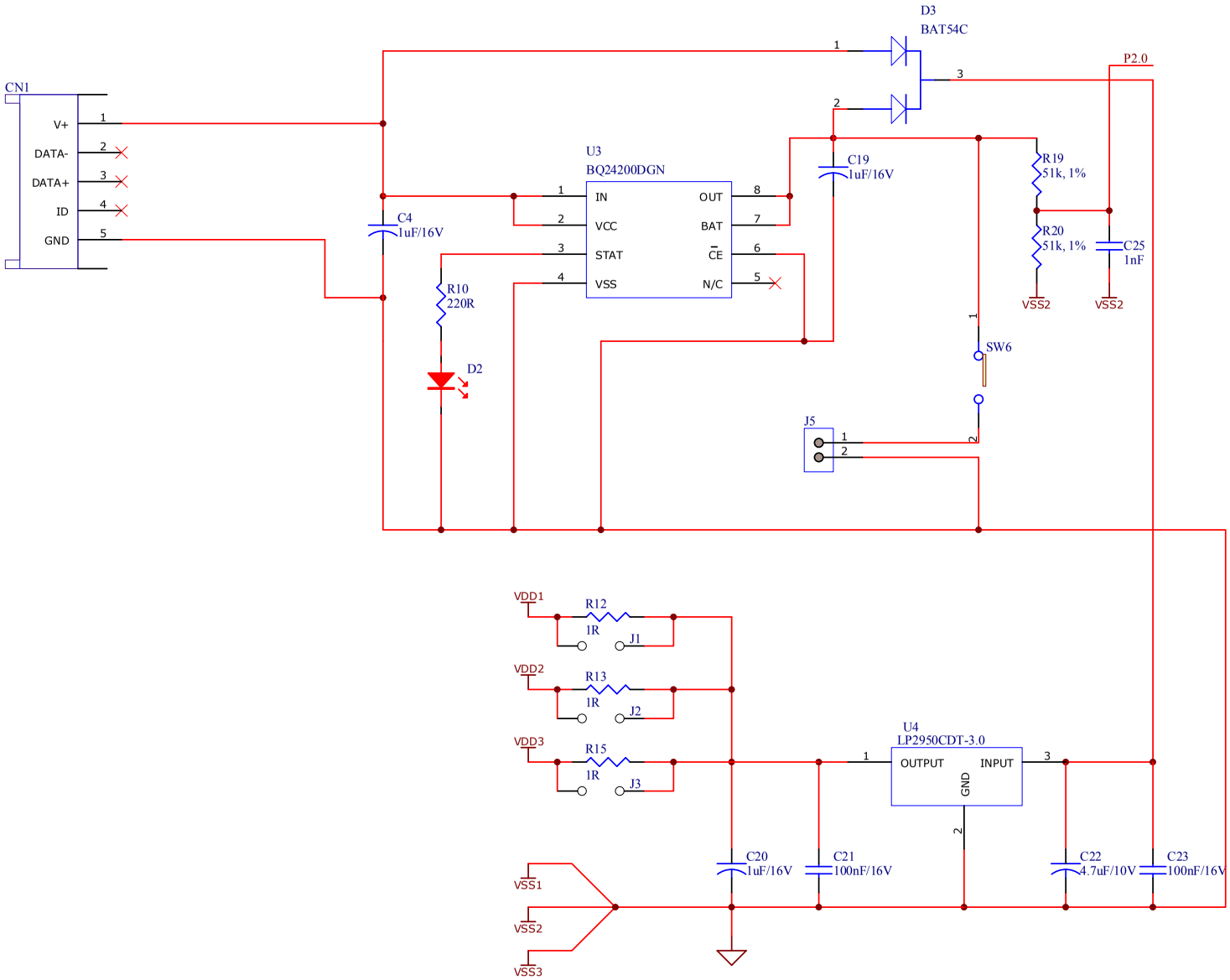


**Figure A3. Circuit-level for voltage regulator and battery management.**

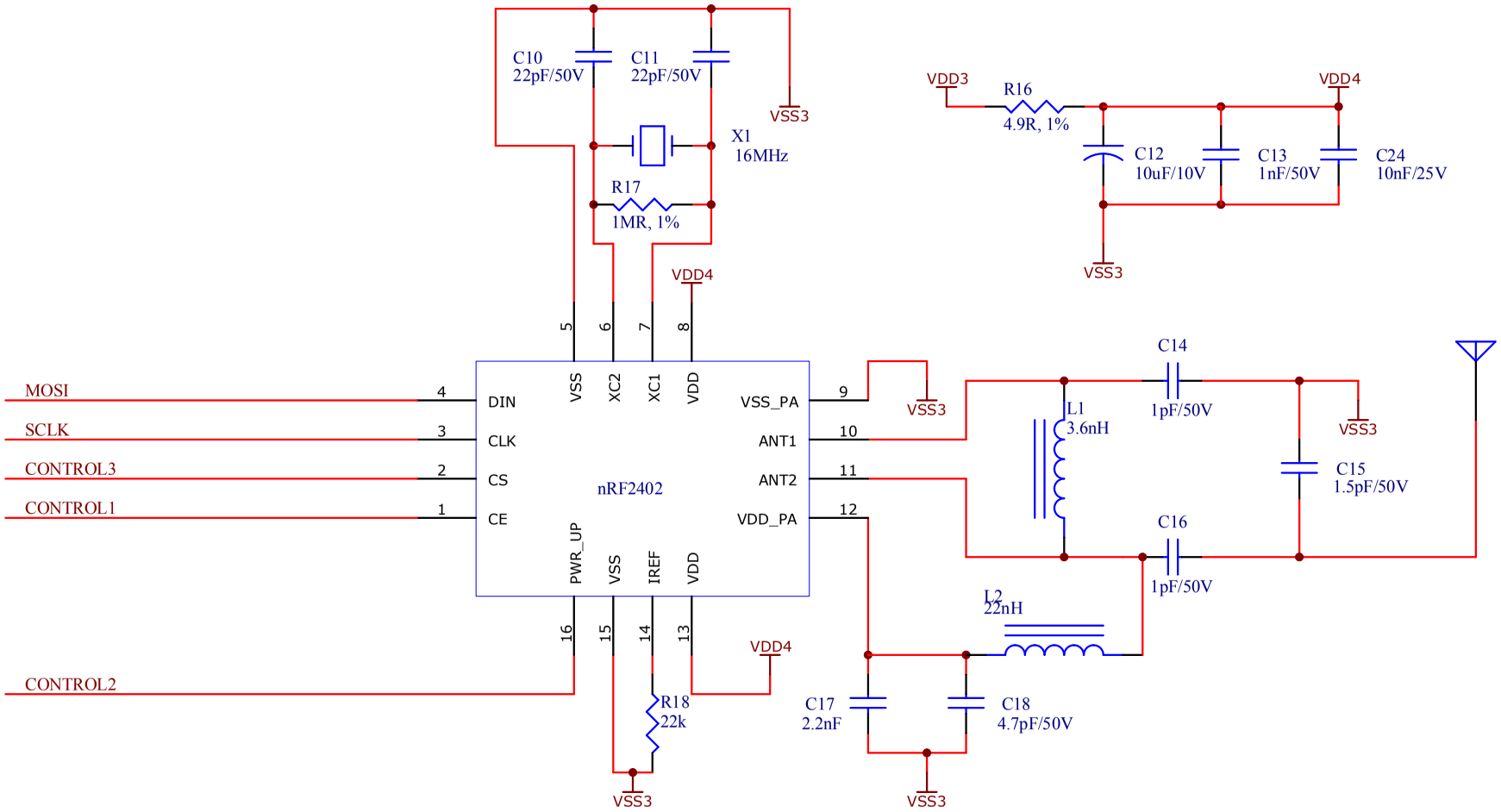


**Figure A4. Circuit-level for transmitter nRF2402.**

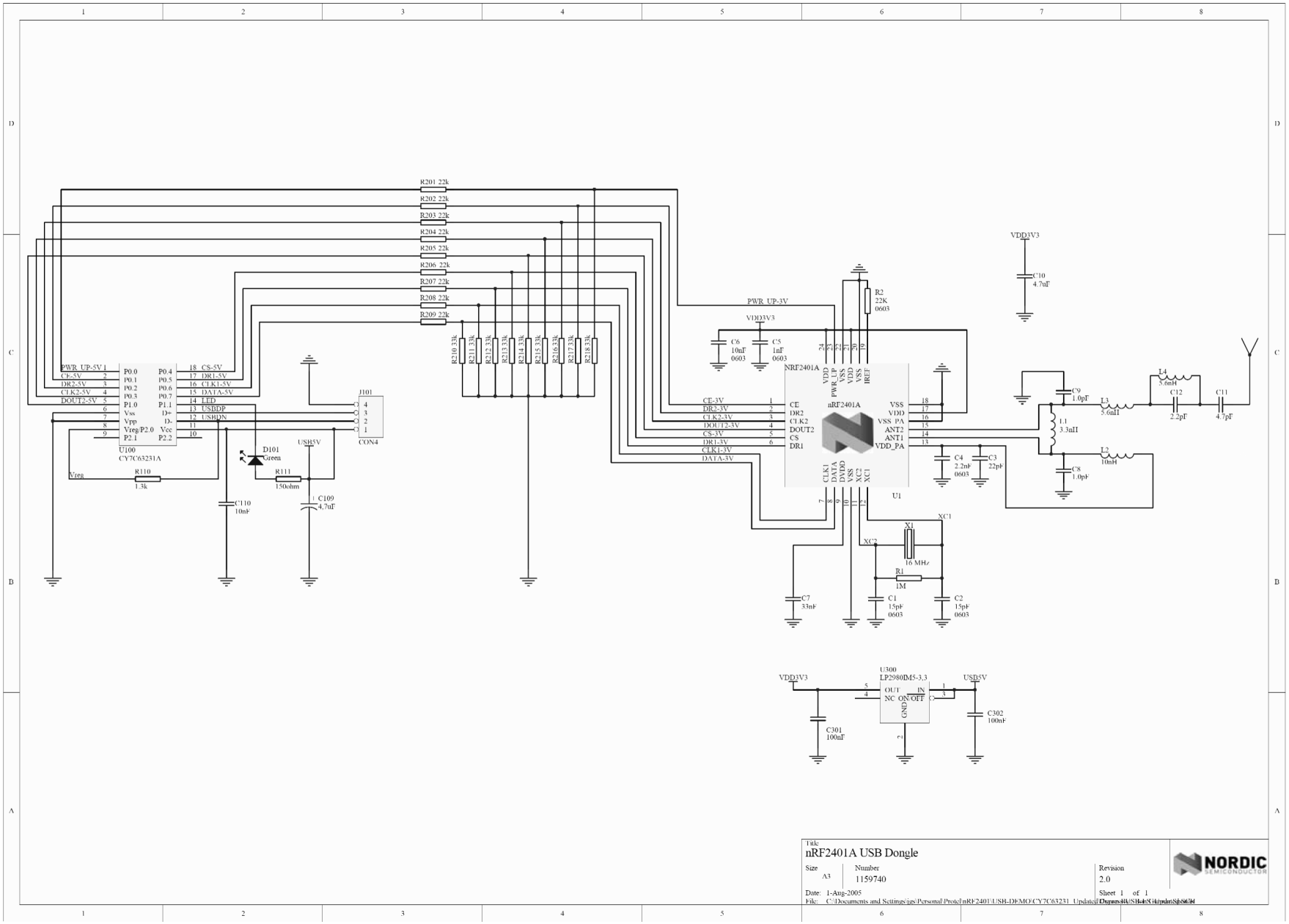


**Figure A5. Circuit diagram of CY7C63231A enCoRe USB microcontroller and nRF2401A transceiver Dongle**

## Appendix B: Bill of Materials for Components Shown on schematic

| No | Comment | Quantity | Designators |
|---|---|---|---|
| 1 | Female mini USB connector | 1 | CN1 |
| 2 | Slide switch,2.54mm pitch | 1 | SW6 |
| 3 | Pads for battery | 11 | J5 |
| 4 | Red smd LED,0805 | 1 | D2 |
| 5 | Pad | 3 | J1,J2,J3 |
| 6 | Smd Socket,10- way | 1 | J4 |
| 7 | Smd button | 4 | SW2,SW3,SW4,SW5 |
| 8 | Cap 1.5pF/50V,0603 | 1 | C15 |
| 9 | Res 100k,1%,0603 | 5 | R1,R2,R3,R4,R5 |
| 10 | Cap 100nF/16V,0603 | 3 | C21,C23,C3 |
| 11 | Cap 10nF/25,0603 | 5 | C1,C24,C5,C6,C9 |
| 12 | Tantalum cap 10uF/10V, case A | 1 | C12 |
| 13 | Smd crystal 16MHz | 1 | X1 |
| 14 | Res 1k,5%,0603 | 1 | R9 |
| 15 | Res 1M,1%,0603 | 2 | R8,R17 |
| 16 | Cap 1nF/50V,0603 | 2 | C13,C25 |
| 17 | Cap 1pF/50V,0603 | 2 | C14,C16 |
| 18 | Res 1R(optional),1%,0603 | 3 | R12,R13,R15 |
| 19 | Cap 1uF/16V,0805 | 6 | C19,C2,C20,C4,C7,C8 |
| 20 | Cap 2.2nF,0603 | 1 | C17 |
| 21 | Res 220R,5%,0603 | 1 | R10 |
| 22 | Res 22k,5%,0603 | 1 | R18 |
| 23 | Inductor 22nH,0603 | 1 | L2 |
| 24 | Cap 22pF/50V,0603 | 2 | C10,C11 |
| 25 | Inductor 3.6nH,0603 | 1 | L1 |
| 26 | Crystal 32.768KHz | 1 | X2 |
| 27 | Cap 4.7pF/50V,0603 | 2 | C18,C22 |
| 28 | Res 5.6R,5%,0603 | 3 | R11,R14,R7 |
| 29 | Res 51k,1%,0603 | 2 | R19,R20 |
| 30 | Res 5R,5%,0603 | 1 | R16 |
| 31 | ADNS-3530 | 1 | U2 |
| 32 | BAT54C,SOT23 | 1 | D3 |
| 33 | BQ24202DGN,MSOP-8 | 1 | U3 |
| 34 | Green smd LED,0805 | 1 | D1 |
| 35 | LP2980AIM5-3.3,TO-92B | 1 | U4 |
| 36 | MSP430F1222IPW | 1 | U1 |
| 37 | nRF2402 | 1 | U201 |

## Appendix C: PCB Layout

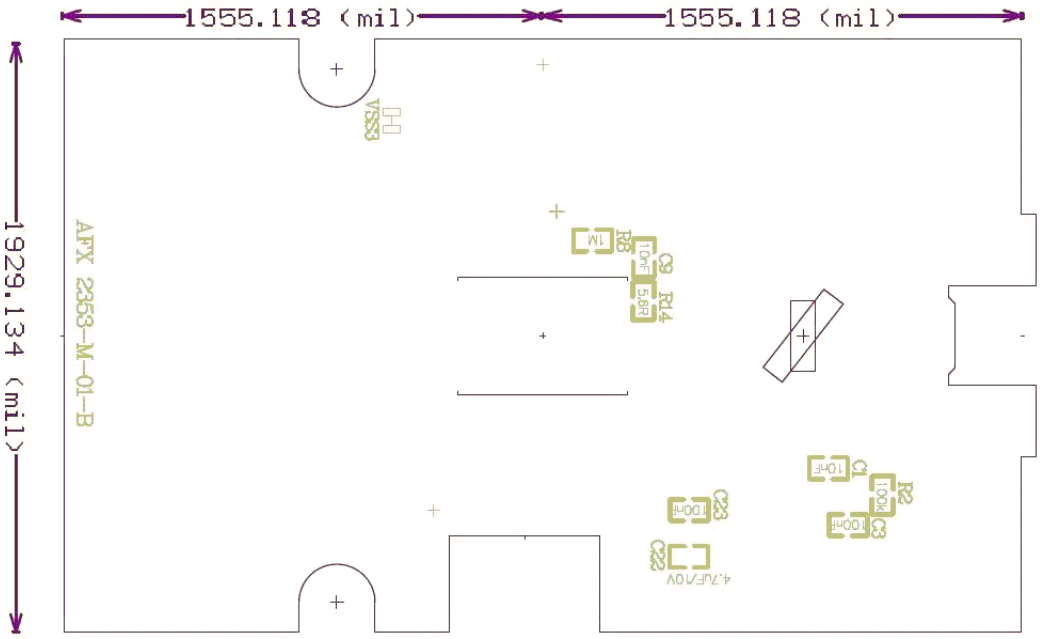


**Figure C1. PCB Schematic (Bottom Overlay)**

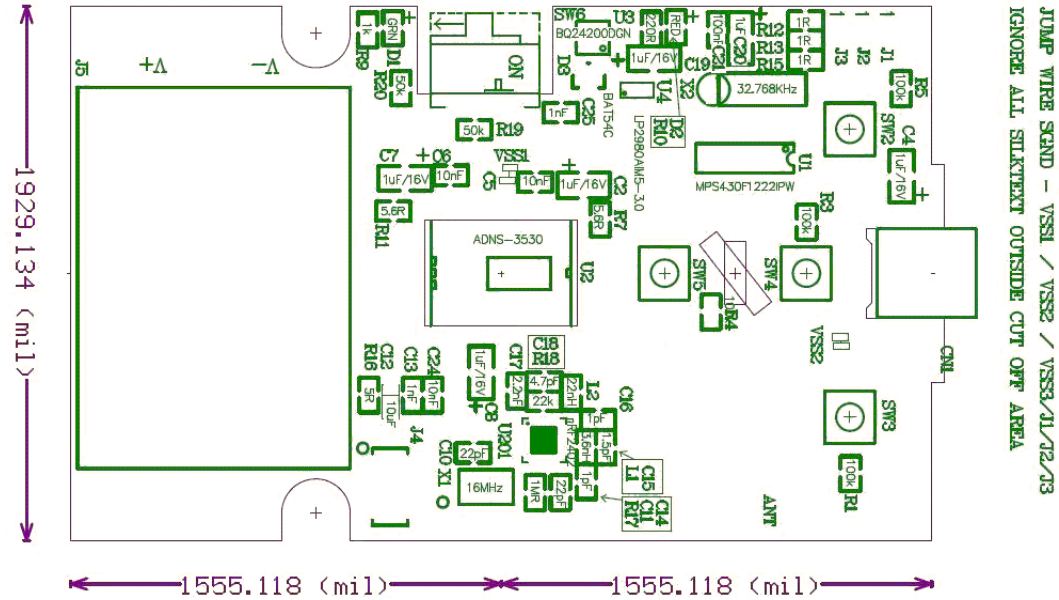


**Figure C2. PCB Schematic (Top Overlay)**

## Appendix D: Base Plate Feature

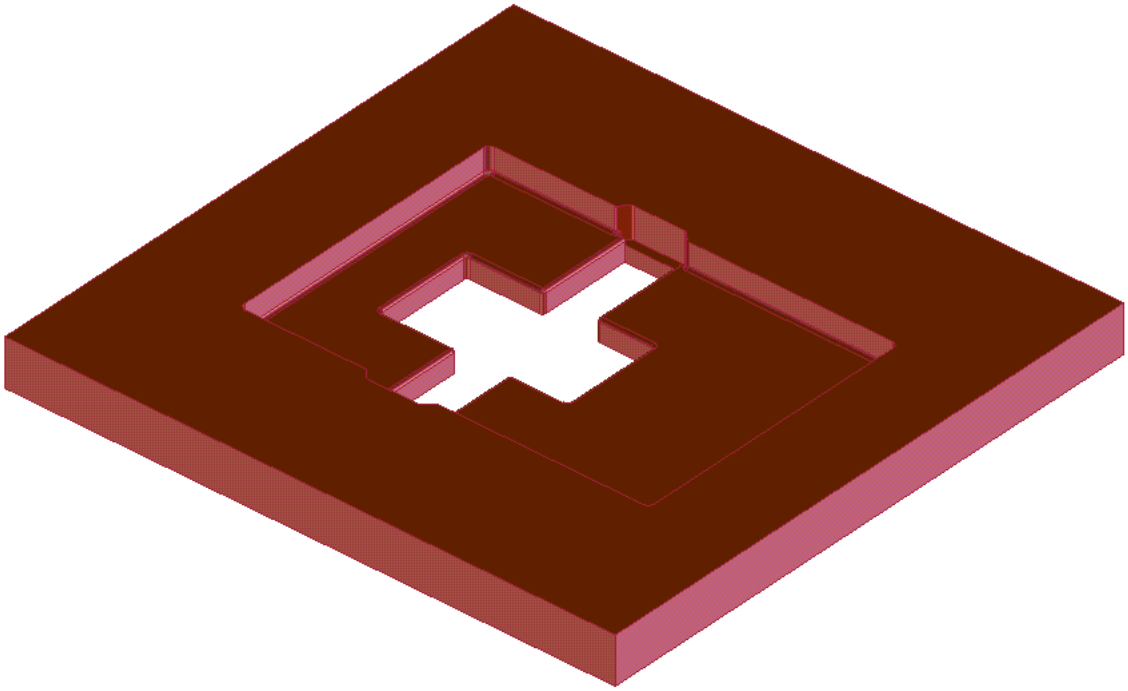

**Figure D1. Overall view of base plate**

## Appendix F: Kit Components

The designer's kit contains components as follows:

| Part Number | Description | Name | Quantity |
|---|---|---|---|
| ADNK-3533-TN24 Mouse | Reference Design Mouse | Reference Design Unit | 1 |
| ADNS-3530 | Solid-State Optical Mouse Sensor | Sensor | 5 |
| ADNS-3150-001 | Lens Plate | Lens | 5 |
| ADNK-3533-TN24<br>CD | Includes Documentation and Support Files for ADNK-3533-TN24<br>Documentation<br>a. ADNB-3532 Data Sheet<br>Hardware Support Files<br>a. ADNK-3533-TN24 BOM List<br>b. ADNK-3533-TN24 Schematic<br>c. IGES Base Plate Feature File<br>d. Gerber File<br>Software Support Files<br>a. Microcontroller Firmware | | 1 |

## Ordering Information

For ordering information, please contact your local Avago Technologies sales representative.

At Avago Technologies call (800)235-0312, visit the website at http://www.avagotech.com/

At Sunplus call +886-3-5786005 ext. 3288 or visit the web site at www.sunplus.com

For product information and a complete list of distributors, please go to our web site: **www.avagotech.com**

Avago, Avago Technologies, and the A logo are trademarks of Avago Technologies, Limited in the United States and other countries.
Data subject to change. Copyright © 2007 Avago Technologies Limited. All rights reserved.
AV02-0334EN - June 13, 2007