ADNK-6013-SP01
Optical Mouse Designer's Kit

Design Guide

Introduction

The Universal Serial Bus (USB) is an industry standard serial interface between a computer and peripherals such as a mouse, joystick, keyboard, UPS, etc. This design guide describes how a cost-effective USB optical mouse can be built using the Sunplus, SPCP825A USB microcontroller and the Avago Technologies ADNS-6010 optical sensor. The document starts with the basic operations of a computer mouse peripheral followed by an introduction to the Sunplus, SPCP825A USB microcontroller and the Avago Technologies ADNS-6010 Optical Navigation Sensor. A schematic of the Sunplus, SPCP825A USB microcontroller to the ADNS-6010 optical sensor and buttons of a standard mouse can be found in Appendix A. The software section of this application note describes the architecture of the firmware required to implement the USB mouse functions. The Sunplus, SPCP825A data sheet is available from the Sunplus web site at www.sunplus.com . The ADNS-6010 data sheet is available from the Avago Technologies web site at www.avagotech.com. USB documentation can be found at the USB Implementers Forum web site at www.usb.org.

ADNB-6011-EV laser mouse bundle set is the world's first laser-illuminated navigation system. With laser navigation technology, the mouse can operate on many surfaces that prove difficult for traditional LED-based optical navigation. Its high-performance architecture is capable of sensing high speed mouse motion velocities up to 45 inches per second and accelerations up to 20g.

The ADNS-6010 sensor along with the ADNS-6120 lens, ADNS-6230-001 clip and ADNV-6340 laser diode form a complete and compact laser mouse tracking system. There are no moving parts, which means high reliability and less maintenance for the end user. In addition, precision optical alignment is not required, facilitating high volume assembly. The ADNS-6010 enables 400cpi, 800cpi, 1600cpi or 2000cpi performance.

Optical Mouse Basics

The optical mouse measures changes in position by optically acquiring sequential surface images (frames), and mathematically determining the direction and magnitude of movement. The Z-wheel movement is done in the traditional method by decoding the quadrature signal generated by optical sensors. This design guide shows how to connect to and manage a standard configuration of mouse hardware, as well as handle the USB protocols. Each of these protocols provides a standard way of reporting mouse movement and button presses to the PC.

Introduction to the Sunplus, SPCP825A

The Sunplus, PSCP825A is a general purpose OTP USB microcontroller. It has dual USB speed, namely low and full speed. It can support PS/2 mode. The transceiver is fully controlled by the firmware. Moreover the USB SIE provides good flexibility for firmware to handle USB protocol. The built in PLL allows CPU to work at 6MHz or 12MHz by using only one 6MHz crystal or resonator.

Serial Peripheral Interface (SPI)

The Sunplus SPCP825A provides a SPI compatible interface. The SPI circuit supports byte serial transfer in either Master or Slave mode. The integrated SPI circuit allows the Sunplus SPCP825A to communicate with external SPI compatible hardware, in this case the ADNS-6010.

Hardware Implementation

The standard hardware to implement a mouse is shown in Figure 1. For X and Y movement, the optical sensor is used. The Z- wheel movement is detected by a set of optical sensors that output quadrature signals. For each button there is a switch that is pulled up internally by the built in pull up resistors. The D - line is pulled up via a 1.3k ohm resistor connected to the VREG pin.

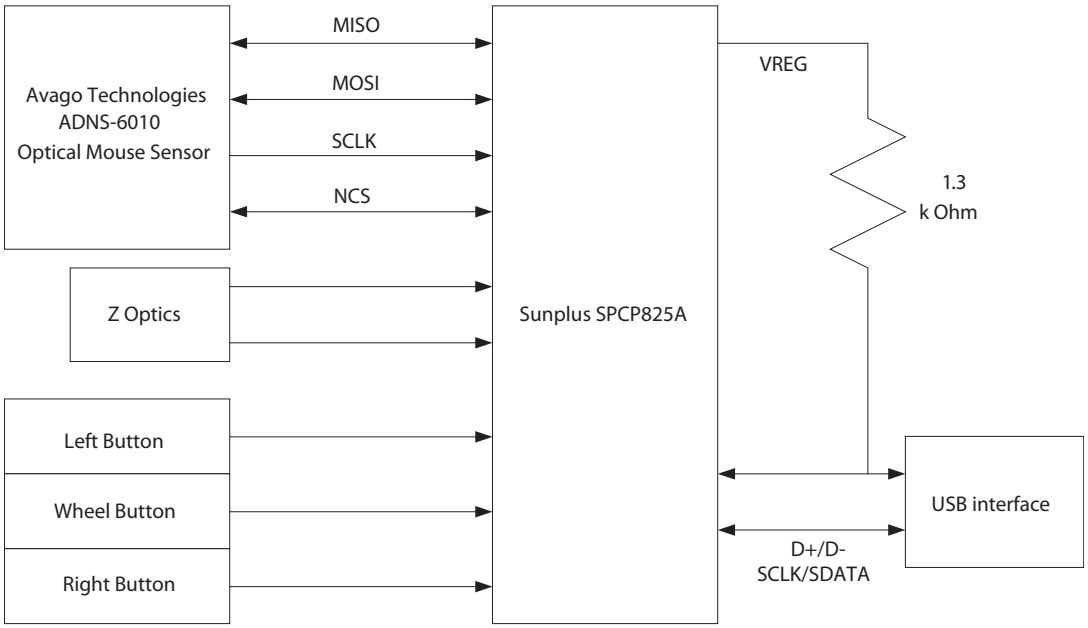

Figure 1. Sunplus SPCP825A –ADNS-6010 Optical Mouse Hardware Block Diagram

Firmware Configurable GPIO

The reference firmware is configured to use the GPIO pins as shown on the schematic in Appendix A. However, it may be more optimal to use a different I/O configuration to meet the mechanical constraints of PCB design. The reference firmware is designed to be easily configured to another set of pin connections. This is accomplished through changes in the I/O definitions at the beginning of the SPC825A_A6010.asm listing. The following statements are the pin definitions as they exist today. The firmware will use these definitions to read and configure the GPIO pins, without any other modification.

Communications between the Sunplus SPCP825A and the ADNS-6010 are done through the integrated SPI interface. The serial port cannot be activated while the chip is in power down mode (NPD low) or reset (RESET high). When the SPI is enabled through PB0 (NCS), the PB2 (SCLK), PB3 (MISO), and PB1 (MOSI) GPIO pins serve special functions to enable the SPI interface to talk with external hardware. During normal operation, the Sunplus SPCP825A SPI is always configured as a Master to output the serial clock on PB2. Therefore, the USB microcontroller always initiates communication. Data sent by the ADNS-6010 optical sensor is received on the PB3 (MISO), and data is shifted out to the ADNS-6010 through the PB1 (MOSI). See the schematic in Appendix A. When writing to the ADNS-6010, the microcontroller drive both the SCLK and the MOSI lines. When reading from the ADNS-6010, the microcontroller drives both the SCLK and MOSI lines initially. After t_{SRAD} delay, the ADNS-6010 will drive the data via MISO. The microcontroller is only driving the SCLK line (outputs SCLK for the serial interface).

Optical Sensor

Avago Technologies ADNS-6010 optical sensor is used in this reference design as the primary navigation engine. This Optical Navigation Technology contains an Image Acquisition System, a Digital Signal Processor, a two channel quadrature output, and a four-wire serial port. The Sunplus SPCP825A periodically reads the ADNS-6010's Delta_X and Delta_Y registers to obtain any horizontal and vertical motion information happening as a result of the mouse being moved. The output of the ADNS-6010 optical sensor is 4-wire serial port.

This motion information will be reported to the PC to update the position of the cursor. The advantages of using ADNS-6010 optical sensor are the best tracking accuracy, flexibility of programming the optical sensor via the SPI port, and the automatic frame rate feature (1000fps to 7080fps). Besides, ADNS-6010 optical sensor performs excellent tracking on difficult surfaces which conventional Led based technology is unable to track such as glossy and smooth surfaces. In addition, Burst mode is another special serial port operation mode that may be used to reduce the serial transaction time for three predefined operations: motion read and SROM download and frame capture. The speed improvement is achieved by continuous data clocking to or from multiple registers.

Motion Read is activated by reading the Motion_Burst register. The ADNS-6010 will respond with the contents of the Motion, Delta_X, Delta_Y, SQUAL, Shutter_Upper, Shutter_Lower and Maximum_Pixel registers in that order. SROM download uses Burst Mode to load the Avago Technologies-supplied firmware file contents into the ADNS-6010. The firmware file is an ASCII text file with each 2-character byte on a single line. Frame Capture is a fast way to download a full array of pixel values from a single frame.

To learn more about sensor's technical information, please visit the Avago Technologies web site at http://www.avagotech.com

Mouse Optics

The motion of Z-wheel is detected using the traditional method by decoding the quadrature signal generated by optical sensors. Two phototransistors are connected in a source-follower configuration. An infrared LED shines, causing the phototransistors to turn on. In between the phototransistors and LED is a pinwheel that turns on the mouse ball rollers. The fan of this pinwheel is mechanically designed to block the infrared light such that the phototransistors are turned on and off in a quadrature output pattern. Every change in the phototransistor outputs represents a count of mouse movement. Comparing the last state of the optics to the current state derives direction information. As shown in Figure 2 below, traveling along the quadrature signal to the right produces a unique set of state transitions, and traveling to the left produces another set of unique state transitions. In this reference design, only the motion at the Z-wheel is detected using this method.

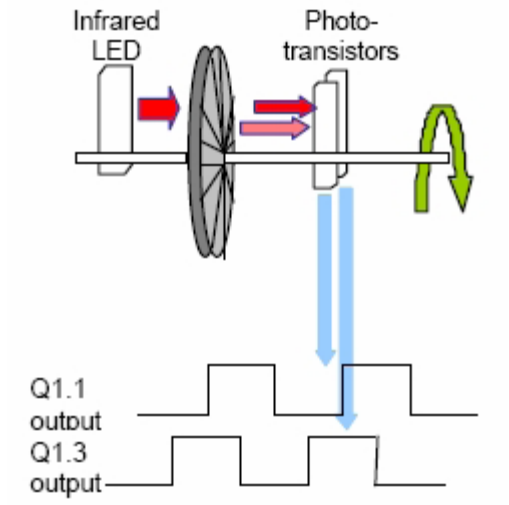

Figure 2. Optics Quadrature Signal Generation

Mouse Buttons

Mouse buttons are connected as standard switches. These switches are pulled up by the pull up resistors inside the microcontroller. When the user presses a button, the switch will be closed and the pin will be pulled LOW to GND. A LOW state at the pin is interpreted as the button being pressed. A HIGH state is interpreted as the button has been released or the button is not being pressed. Normally the switches are debounced in firmware for 15-20ms. In this reference design there are three switches: left, Z-wheel, and right.

USB Connection

The Sunplus SPCP825A has a configuration register that switches control from the SIE to manual control on the D+ and D- pins. This allows the firmware to dynamically configure itself to operate as a USB. The firmware for this reference design will automatically detect the host topology (USB) at plug-in and will configure itself for operation on that bus. If a USB host connection is detected then the firmware will enable the VREG pin, such that the 1.3k ohm resistor connected to the D- line can be pulled up to 3.3V. It is this action that causes the host to recognize that there is a low-speed USB peripheral attached. The connections for the connectors are shown in Figure 3 below.

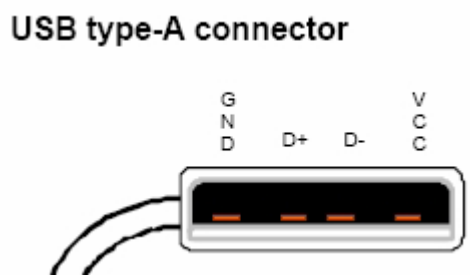

Figure 3. USB peripheral connector

Some details on ADNK-6013-SP01

The ADNK-6013-SP01 reference design mouse unit allows users to evaluate the performance of the Optical Tracking Engine (sensor, lens, LASER assembly clip, LASER) over a USB connection, using a Sunplus SPCP825A USB Controller. This kit also enables users to understand the recommended mechanical assembly. (See Appendix C, and D)

System Requirements

PCs using Windows® 95/ Windows® 98/ Windows® NT/ Windows® 2000 with standard 3-button USB mouse driver loaded.

Functionality

3-button, scroll wheel mouse.

Operating (For USB Mode)

Hot pluggable with USB port. The PC does not need to be powered off when plugging or unplugging the evaluation mouse.

To Disassemble the ADNK-6013-SP01 Unit

The ADNK-6013-SP01 comprises of the plastic mouse casing, printed circuit board (PCB), lens, buttons, and USB cable. (See Figure 4.) Unscrewing the one screw located at the base of the unit can open the ADNK-6013-SP01 unit. Lifting and pulling the PCB out of the base plate can further disassemble the mouse unit.

Caution: The lens is not permanently attached to the sensor and will drop out of the assembly.

Enabling the SROM

The ADNS-6010 must operate from the externally loaded programming. This architecture enables immediate adoption of new features and improved performance algorithms. The external program is supplied by Avago Technologies as a file which may be burned into a programmable device. A microcontroller with sufficient memory may be used. On power-up and reset, the ADNS-6010 program is downloaded into volatile memory using the burst-mode procedure described in the Synchronous Serial Port section. The program size is 1986 x 8 bits.

For more information, please refer to the ADNS-6010 datasheet.

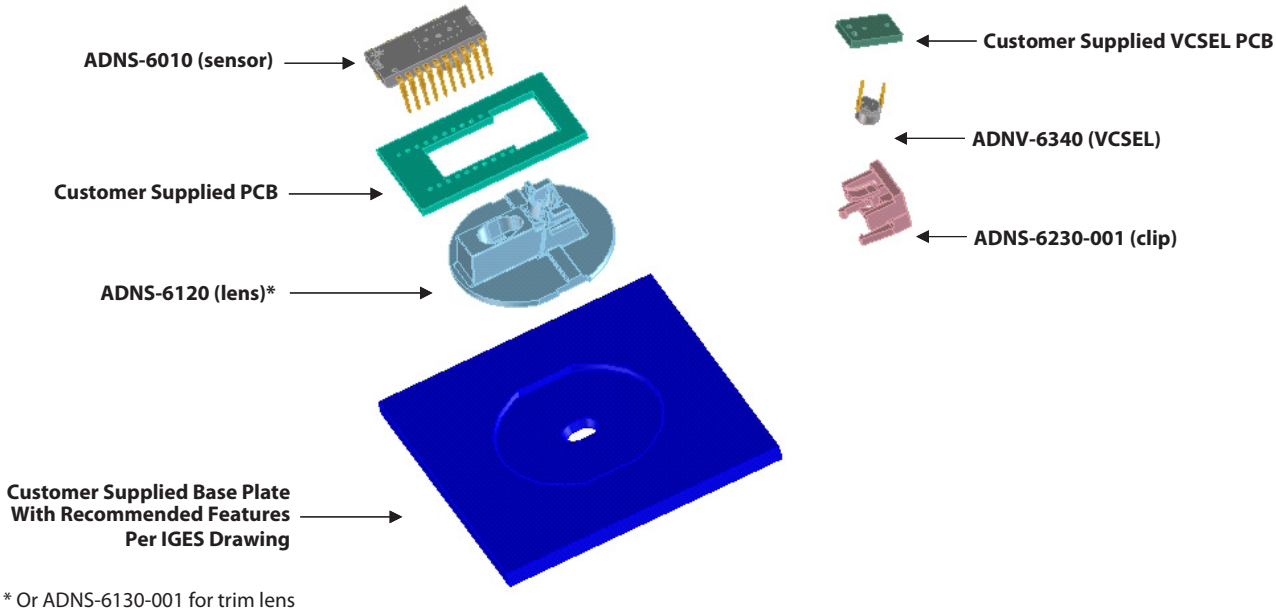

* Or ADNS-6130-001 for trim lens

Figure 4. Exploded view drawing of optical tracking engine with ADNS-6010 optical mouse sensor.

While reassembling the components, please make sure that the Z height (Distance from lens reference plane to surface) is valid. Refer to Figure 5.

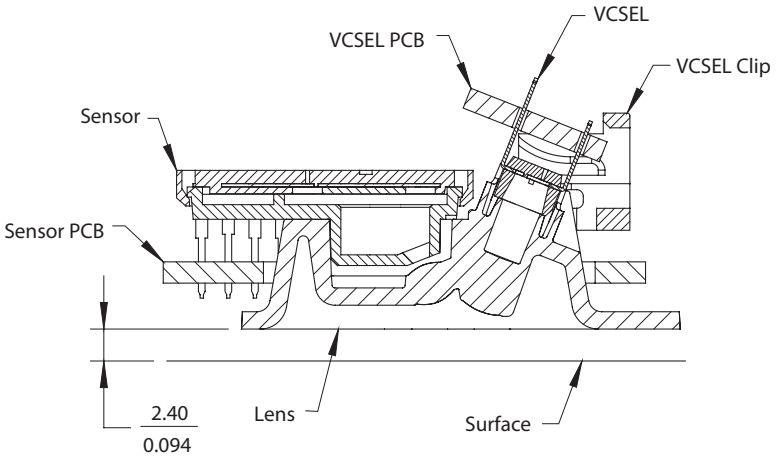

Dimension in millimeters / inches

Figure 5. Distance from lens reference plane to surface

Regulatory Requirements

- Passes FCC B and worldwide analogous emission limits when assembled into a mouse with shielded cable and following Avago Technologies recommendations.
- Passes IEC-1000-4-3 radiated susceptibility level when assembled into a mouse with shielded cable and following Avago Technologies recommendations.
- Passes EN61000-4-4/IEC801-4 EFT tests when assembled into a mouse with shielded cable and following Avago Technologies recommendations.
- UL flammability level UL94 V-0.
- Provides sufficient ESD creepage/clearance distance to avoid discharge up to 15kV when assembled into a mouse according to usage instructions above.

Eye Safety

The ADNS-6010 and the associated components in the schematic of Figure A1 are intended to comply with Class 1 Eye Safety Requirements of IEC 60825-1. Avago Technologies suggests that manufacturers perform testing to verify eye safety on each mouse. It is also recommended to review possible single fault mechanisms beyond those described below in the section "Single Fault Detection".

Under normal conditions, the ADNS-6010 generates the drive current for the laser diode (ADNV-6340). In order to stay below the Class 1 power requirements, resistor Rbin must be set at least as high as the value in the bin table, based on the bin number of the laser diode and LP_CFG0 and LP_CFG1 must be programmed to appropriate values. Avago Technologies recommends using the exact Rbin value specified in the bin table to ensure sufficient laser power for navigation. The system comprised of the ADNS-6010 and ADNV-6340 is designed to maintain the output beam power within Class 1 requirements over component manufacturing tolerances and the recommended temperature range when adjusted per the procedure below and when implemented as shown in the recommended application circuit of Figure A1. For more information, please refer to Eye Safety Application Note 5088.

LASER Power Adjustment Procedure

1. The ambient temperature should be 25C +/- 5C.
2. Set VDD3 to its permanent value.
3. Ensure that the laser drive is at 100% duty cycle by setting bit 6 of register 0x0A to 0.
4. Program the LP_CFG0 and LP_CFG1 registers to achieve an output power as close to 506uW as possible without exceeding it.

Good engineering practices should be used to guarantee performance, reliability and safety for the product design.

LASER Output Power

The laser beam output power as measured at the navigation surface plane is specified below. The following conditions apply:

1. The system is adjusted according to the above procedure.
2. The system is operated within the recommended operating temperature range.
3. The VDD3 value is no greater than 50mV above its value at the time of adjustment.
4. No allowance for optical power meter accuracy is assumed.

Component Summary

Below is the summary of the components contained in the ADNK-6013-SP01 Designer's Kit.

Sensor

The sensor technical information is contained in the ADNS-6010 Data Sheet.

Lens

The lens technical information is contained in the ADNS-6120 Data Sheet. The flange on the standard ADNS-6120 lens is for ESD protection.

LASER Assembly Clip

The information on the assembly clip is contained in the ADNS-6230-001 Data Sheet.

LASER

The LASER technical information is contained in the ADNV-6340 Data Sheet and Application Note AN-5088. Additional application notes regarding Eye Safety Requirements are also available at Avago Technologies website.

Base Plate Feature – IGES File

The IGES file on the CD-ROM provides recommended base plate molding features to ensure optical alignment. This includes PCB assembly diagrams like solder fixture in assembly and exploded view, as well as solder plate. See Appendix D for details.

Reference Design Documentation – Gerber File

The Gerber File presents detailed schematics used in ADNK-6013-SP01 in PCB layout form. See Appendix C for more details.

Overall circuit

A schematic of the overall circuit is shown in Appendix A of this document. Appendix B lists the bill of materials.

Firmware Implementation

The firmware for this reference design is written in the Sunplus assembly language. The following files are required to compile the mouse firmware.

SPCP825A _A6010.asm –main mouse firmware.

hiddesc3.asm - 3 buttons mouse mode USB descriptor ROM tables.

Hiddesc5.asm – USB 3 Key Mode Descriptor Rom Tables

pro_6010.asm – Routine to access ADNS-6000 sensor register.

SPCP825A.inc – The SPCP825A I/O registers definition.

adns6010_SROM.inc – ADNS-6000 SROM firmware.

ADNS6010.inc – ADNS-6010 Sensor registers include files.

delay.inc – SPCP825A delay loop subroutine.

decode_setup.inc – USB descriptor and request constants.

det_Z.inc – SPCP825A Z-axis event handler.

DET_KEY.inc – SPCP825A button event handler.

MODE_SEL.inc – Detect Bus status for USB mode.

StartUp.asm – This include file is for AVAGO TECHNOLOGIES ADNS-6010 Mouse Sensor laser power calibration.

At power up, the firmware examines the host interface and automatically determines the mouse USB host connection. Then the host firmware configures itself to operate on the detected interface.

USB Interface

All USB Human Interface Device (HID) class applications follow the same USB start-up procedure. The procedure is as follows

1. Device Plug-in

When a USB device is first connected to the bus, it is powered and running firmware, but communications on the USB remain non-functional until the host has issued a USB bus reset.

2. Bus Reset

The pull-up resistor on D– notifies the hub that a low speed (1.5 Mbps) device has just been connected. The host recognizes the presence of a new USB device and initiates a bus reset to that device.

3. Enumeration

The host initiates SETUP transactions that reveal general and device specific information about the mouse. When the description is received, the host assigns a new and unique USB address to the mouse. The mouse begins responding to communication with the newly assigned address, while the host continues to ask for information about the device description, configuration description and HID report description. Using the information returned from the mouse, the host now knows the number of data endpoints supported by the mouse (2). At this point, the process of enumeration is completed.

Notes
1: idVendor should be changed to the value as supplied by the USB-IF
2: idProduct should be assigned for specific product.
3: MaxPower value should be changed as per specific circuit's current draw.

4. Post Enumeration Operation

Once communication between the host and mouse is established, the peripheral now has the task of sending and receiving data on the control and data endpoints. In this case, when the host configures endpoint 1, the mouse starts to transmit button and motion data back to the host when there is data to send. At any time the peripheral may be reset or reconfigured by the host.

USB Requests – Endpoint 0

Endpoint 0 acts as the control endpoint for the host. On power-up endpoint 0 is the default communication channel for all USB devices. The host initiates Control-Read and Control-Write (see Chapter 8 of the USB specification) to determine the device type and how to configure communications with the device. In this particular design, only Control-Read transactions are required to enumerate a mouse. For a list of valid requests see Chapter 9 of the USBG specification. In addition to the standard "Chapter 9" requests, a mouse must also support all valid HID class requests for a mouse.

USB Requests – Endpoint 1

Endpoint 1 is the data transfer communications channel for mouse button, wheel, and movement information. Requests to this endpoint are not recognized until the host configures endpoint 1. Once this endpoint is enabled, then interrupt IN requests are sent from the host to the mouse to gather mouse data. When the mouse is left idle (i.e. no movement, no new button presses, no wheel movement) the firmware will NAK requests to this endpoint. Data is only reported when there is a status change with the mouse.

Two HID report formats are used in this design. The boot protocol, as defined by the HID specification, is the default report protocol that all USB enabled systems understands. The boot protocol has a three-byte format, and so does not report wheel information. The HID report descriptor defines the report protocol format. This format is four bytes and is the same as the report format with the exception of the fourth byte, which is the wheel information. Appendix F of this document lists the USB Data Reporting Format.

USB Firmware Description

A function call map for USB operation is shown in Figure 6. The following are descriptions of the functions in SPCP825A _A6010.asm.

Start_up – This function is used for mouse sensor calibration. It proceeds for calibration when the output power measurement device is plugged to the mouse. Otherwise it skips the calibration process and proceeds to USB initialization.

Read_LP_CFG_REG – This function reads the calibrated laser power configuration register from EEPROM.

reset_ands6010 – This function is responsible for resetting the hardware, loading the SROM (Shadow ROM) firmware into the ADNS-6010 optical sensor. Then ReadSPI and WriteSPI are called to set the resolution of the sensor to 2000cpi. The ID from the device and program are compared. If the ID is not the same, then the program is trapped in the dead loop, i.e. the device is unusable.

hard_reset – This routine resets the serial interface and the ADNS-6010 internal registers by generating a pulse on the RESET pin.

LoadSROM – This routine is used to load the SROM (Shadow ROM) firmware into the ADNS-6010 optical sensor. It is called after hard_reset.

WriteSPI – Writes to the ADNS-6010 register. A write operation consists of two bytes. The first byte contains the address (7 bits) and has "1" as its MSB. The second byte contains data. The microcontroller is responsible to drive both the SCLK and the MOSI lines.

ReadSPI – Reads the desired ADNS-6010 registers. A read operation is composed of two parts. First, the microcontroller performs a write to the ADNS-6010, sending the address of the target register to be read. The microcontroller drives both the SCLK and MOSI lines. After t_{SRAD} delay, the ADNS-6010 will drive the data via MISO. The microcontroller is only driving the SCLK line (outputs SCLK for the serial interface).

CheckProductID – This function checks the product ID of the sensor chip being used. The ID returned should match with the ADNS-6010's ID. Otherwise the program is trapped in the dead loop, i.e. the device is unusable.

Check_SROM_ID – This function is to check the SROM ID, if product device and program ID do not match, the program is trapped in the dead loop, and thus the device is unusable.

disable_laser – This function is called to disable the operation of the laser.

AdjustLaser – This function is used to adjust the laser power. To meet Class 1 eye safety requirement, manufacturers are required to program LP_CFG0 and LP_CFG1 to get laser output power as close to 506uW as possible. This is done by using a power meter which can measure the output laser power during mouse calibration.

SetDCMode – Set the laser to continuous on mode for laser calibration purpose.

SetShutterMode – This function is responsible to on the laser only when illumination is required. This is to ensure safety to the users as well as for power saving.

enable_laser – This function is to enable the laser.

check_susp – This function is used to determine whether the mouse is in the suspend mode.

sample_mouse – This routine returns any updates in the X, Y and Z-wheel motion information. The motion of the Z-wheel is detected using the traditional method by decoding the quadrature signal generated by the phototransistors. The X and Y directions of the movement are obtained by calling the ReadDeltaX and ReadDeltaY routines. The X, Y, and Z-wheel movement is stored in the [xCount], [yCount], and [zCount] variables which will be sent to the host in the main routine.

detect_key_change – This function is used to detect left, right or middle button changes.

ReadMotionReg – Reads the ADNS-6010 Motion register. The data returned from this register will be used to determine if any motion has occurred or if any fault condition exists.

ReadDeltaX – Reads the ADNS-6010 Delta_X register for the X movement. Calls the ReadSPI routine to enable the SPI interface and perform reading operations through the two wire serial interface. Any new X motion information is added to the [xCount] variable.

ReadDeltaY – Reads the ADNS-6010 Delta_Y register for the Y movement. Calls the ReadSPI routine to enable the SPI interface and perform reading operations through the two wire serial interface. Any new Y motion information is added to the [yCount] variable.

Report_mouse_data – This function is used to send buttons, X, Y and Z-wheel data to the computer.

USB Functions

Main_loop –This function spins in an infinite loop waiting for an event that needs servicing. sample_mouse and report_mouse_data are the functions which are called within this loop to retrieve any new motion or button information. The data received from these functions will be loaded into the endpoint 1 buffer to be sent to the host.

Mice_USB_Loop – This routine initializes the USB related parameters and then loads the SROM firmware into the ADNS-6010 sensor before proceeding to AdjustLaser. The program then goes to the main_loop.

main_loop – This function spins in an infinite loop waiting for an event that needs servicing. The sample_mouse function is called within this loop to retrieve any new motion or button information. The data received from this function will be loaded into the endpoint 1 buffer to be sent to the host.

ep0SetupReceived – This routine is entered whenever a SETUP packet is received in on endpoint 0. It parses the packet and calls the appropriate routine to handle the packet.

ep0InReceived –This routine is entered whenever an IN packet is received on endpoint 0.

ep0OutReceived – This routine is entered whenever an OUT packet is received on endpoint 0.

setDeviceConfiguration – This routine is entered when a SET CONFIGURATION request has been received from the host.

setDeviceAddress – This routine is entered whenever a SET ADDRESS request has been received. The device address change cannot actually take place until after the status stage of this no-data control transaction, so the address is saved and a flag is set to indicate that a new address was just received. The code that handles IN transactions will recognize this and set the address properly.

setInterfaceIdle – This routine is entered whenever a SET IDLE request is received. See the HID specification for the rules on setting idle periods. This function sets the HID idle time. See the HID documentation for details on handling the idle timer.

setInterfaceProtocol – This routine is entered whenever a SET PROTOCOL request is received. This no-data control transaction enables boot or report protocol.

getInterfaceReport – This routine is entered whenever a GET REPORT request is received.

getInterfaceProtocol – This routine is entered whenever a GET PROTOCOL request is received. This request initiates a control-read transaction that tells the host if the mouse is configured for boot or report protocol. See the HID class documentation for more details.

getDeviceConfiguration – This routine is entered whenever a GET CONFIGURATION Request is received. This function then starts a control read transaction that sends the configuration, interface, endpoint, and HID descriptors to the host.

requestNotSupported – Unsupported or invalid descriptor requests will cause this firmware to STALL these transactions.

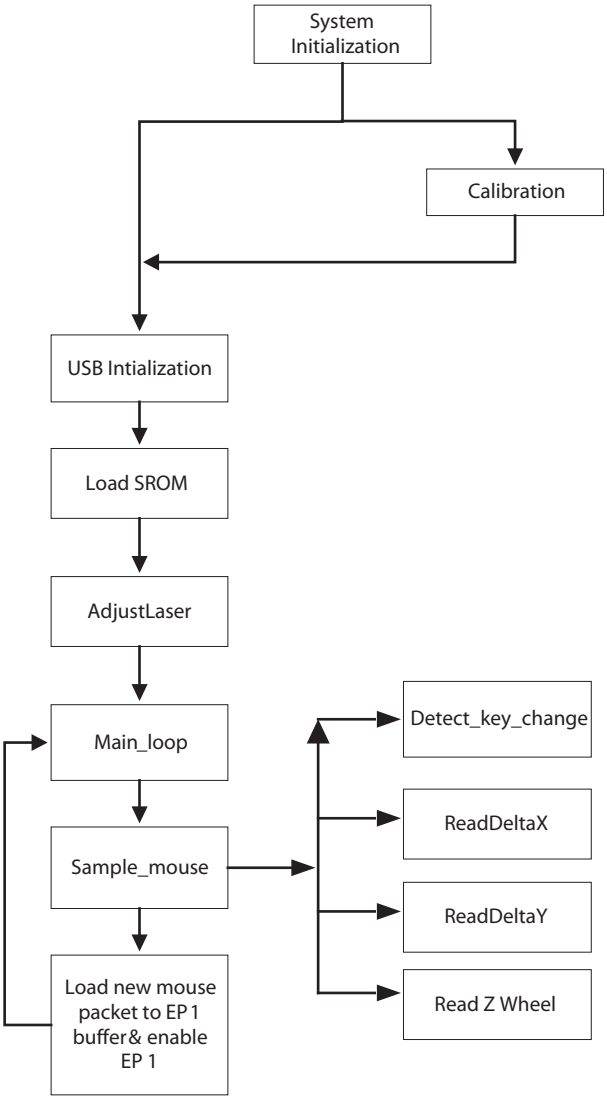

Figure 6. USB Operation Function Call Map

Manufacturer String

A request for the manufacturer string will return the following string.

"Avago Technologies Reference Design Mouse"

Product String

A request for the product string will return the following string.

"ADNS-6010 Mouse"

Configuration String

A request for the configuration string will return the following string.

"HID-Compliant Mouse"

Endpoint 1 String

A request for the endpoint string will return the following string.

"Endpoint 1 Interrupt Pipe"

Note
1: The Manufacturer String should be changed to the name of your company.
2: The Product String should be changed to your product's name.

Appendix A: Schematic Diagram of the Overall Circuit

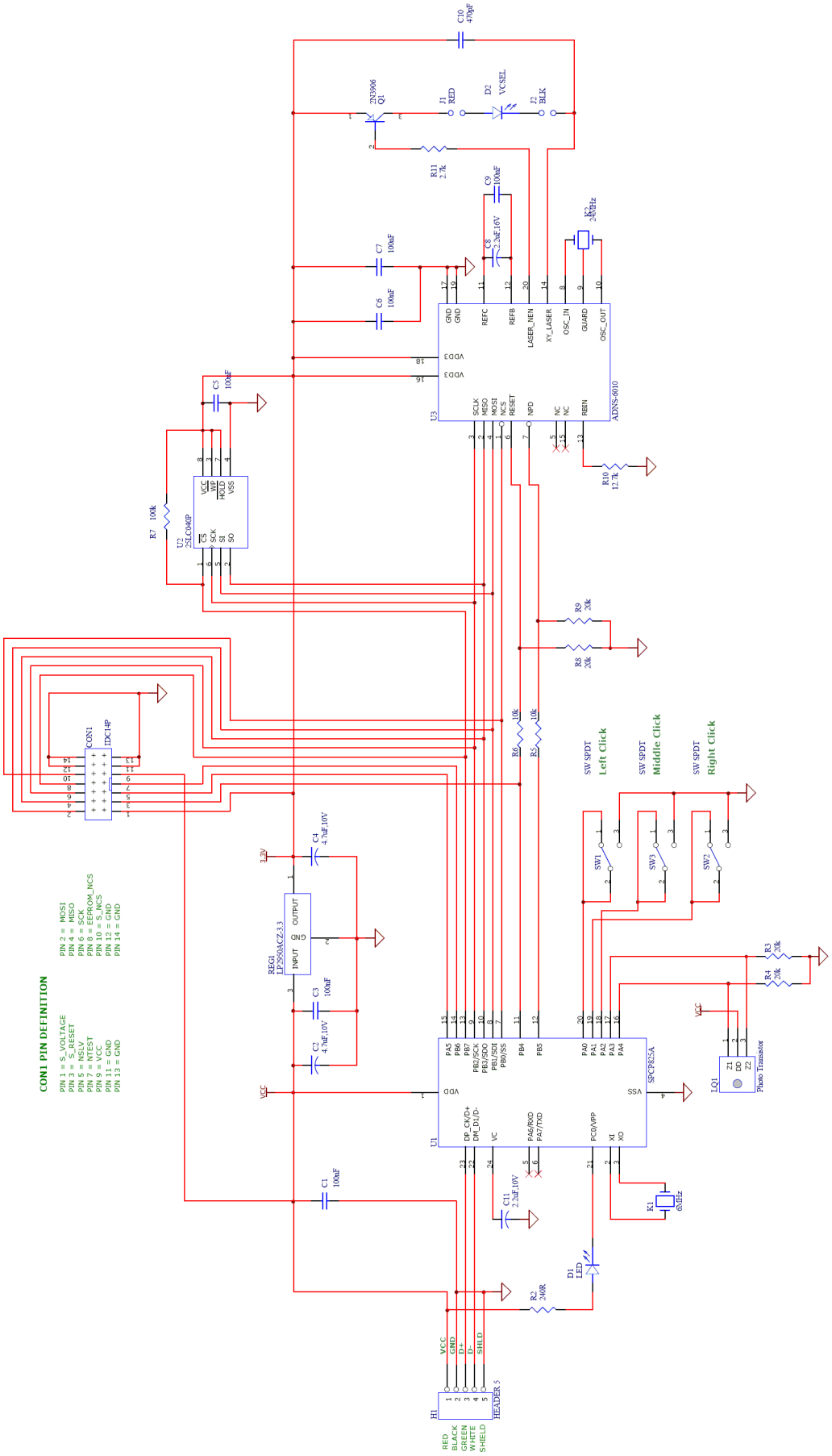

Figure A1. Circuit-level block diagram for ADNK-6013-SP01 designer's kit optical mouse using the Avago Technologies ADNS-6010 optical mouse sensor and Sunplus SPCP825A USB Controller.

Appendix B: Bill of Materials for Components Shown on schematic

Comment	Footprint	Quantity
Chip RES 240R 1%	0805	1
Chip RES 2.7k 1%	0805	1
Chip RES 10k 1%	0805	2
Chip RES 20k 1%	0805	4
Chip RES 100k 1%	0805	1
Chip RES 12.7k 1%	0805	1
Cer. Cap 470pF	0805	1
Cer. Cap 100nF	0805	6
CAP TANTALUM 4.7uF 20V	CASE A	2
CAP TANTALUM 2.2uF 10V	CASE A	2
Photo Transistor	DIP	1
2N3906	TO92	1
Resonator 6MHz	SMD	1
Resonator 24MHz	DIP	1
ADNS-6010	DIP	1
SPC825A	DIP24	1
25LC040/P (4 K bit / 512B)	SOIC	1
FRICTION LOCKED	HEADLOCK5P	1
PIN HEADER 2mm(x2 row)	DIP	1
Photo LED	DIP	1
LP2950ACZ-3.3	T092	1
Jumper RED	DIP	1
Jumper BLK	DIP	1

Appendix C: PCB Layout

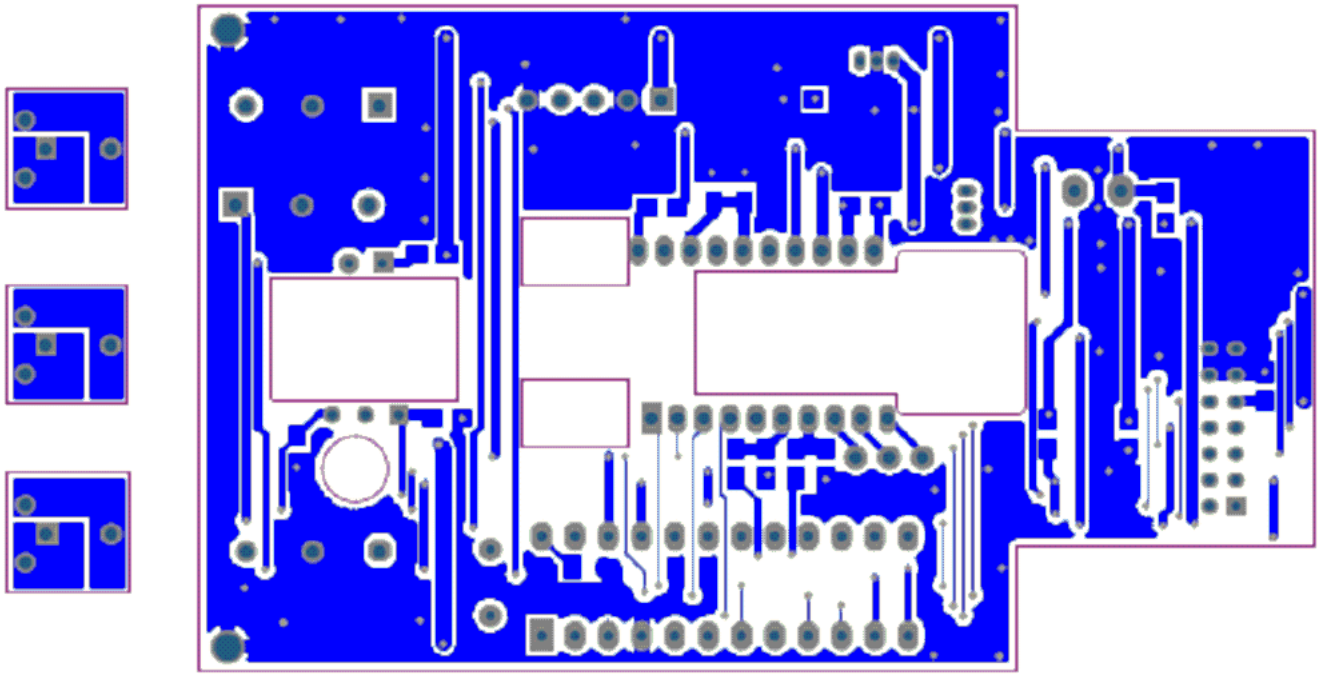

Figure C1: PCB Schematic (Bottom Layer)

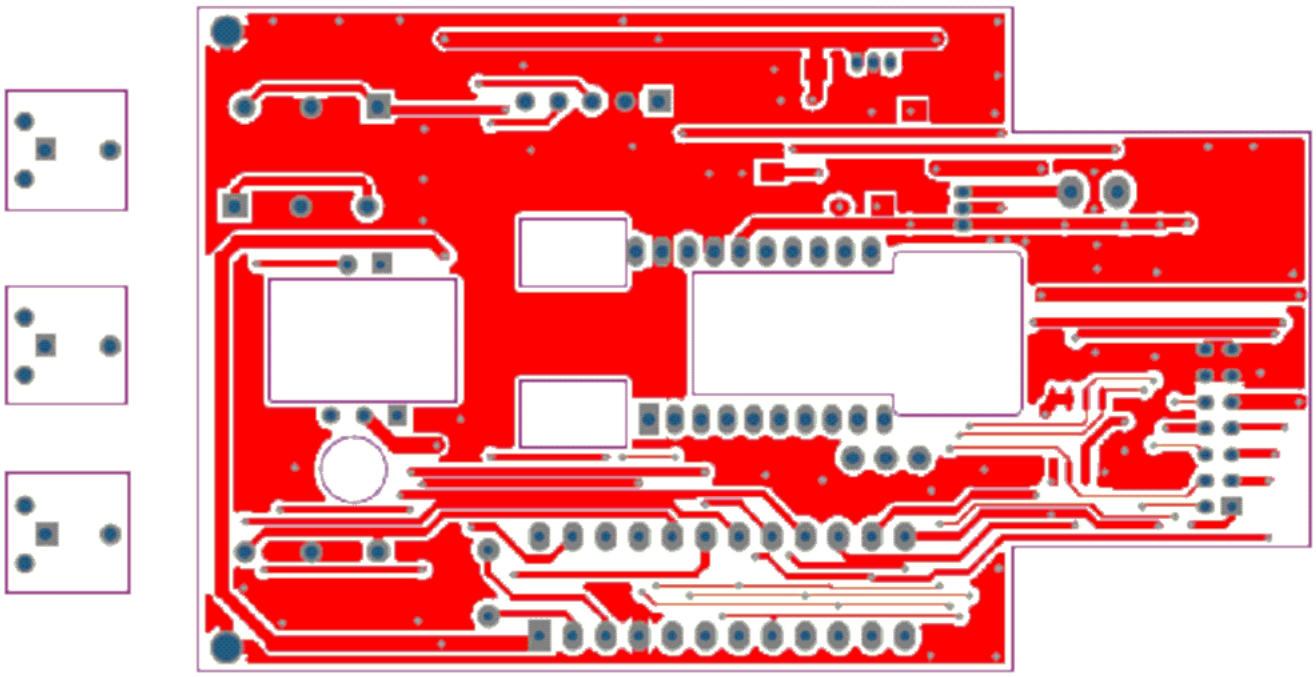

Figure C2: PCB Schematic (Top Layer)

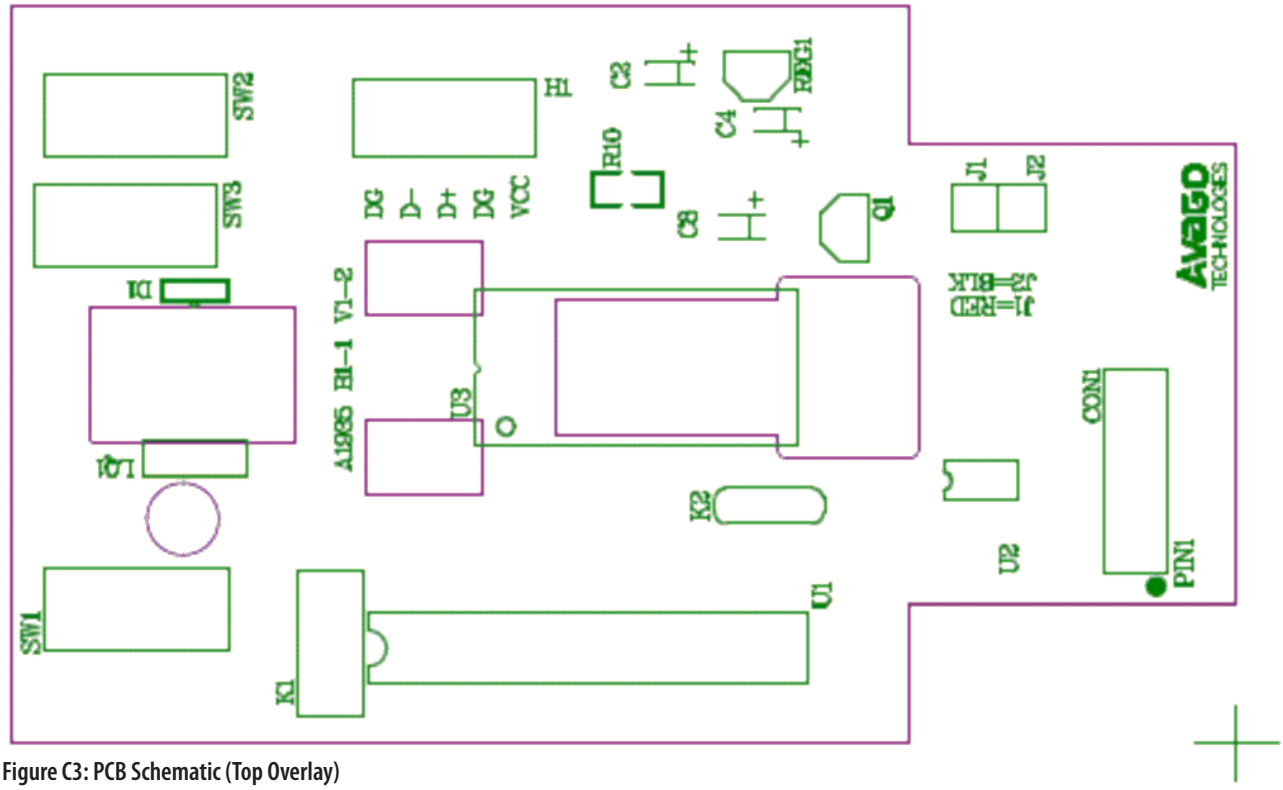

Figure C3: PCB Schematic (Top Overlay)

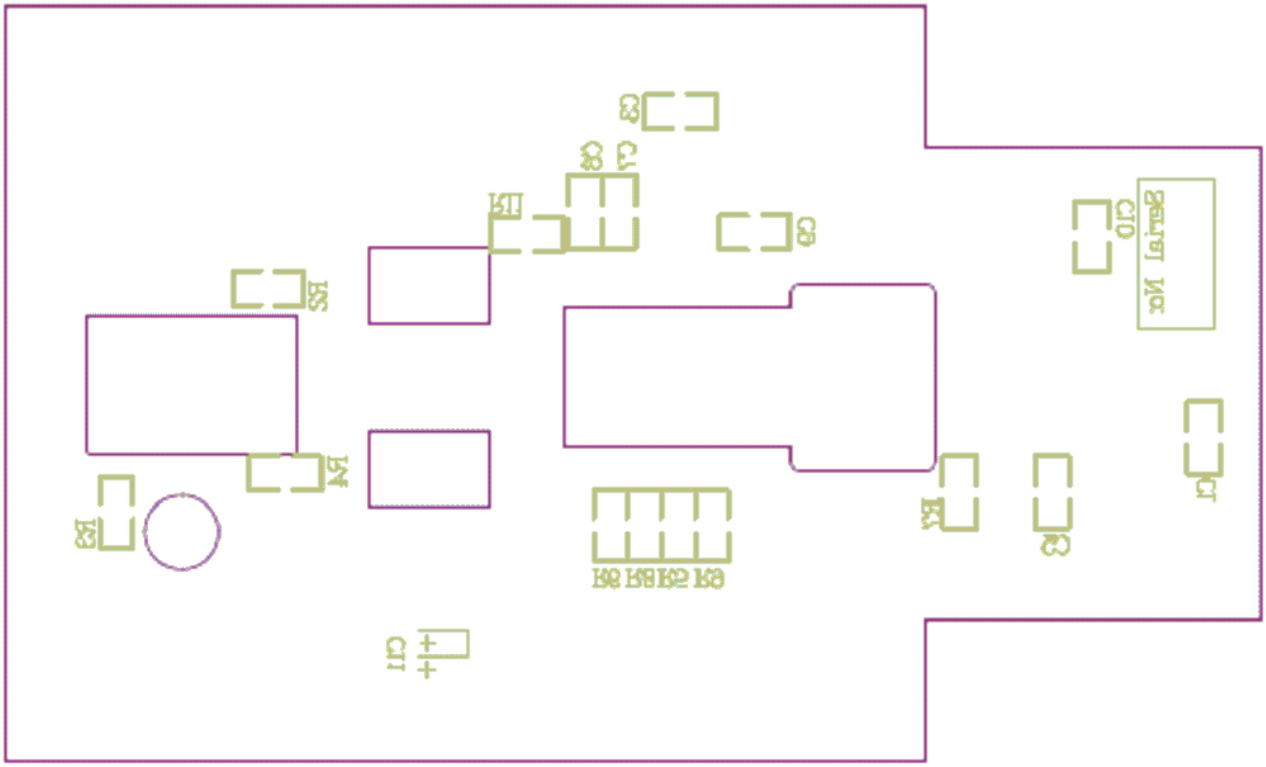

Figure C4: PCB Schematic (Bottom Overlay)

Appendix D: Base Plate Feature

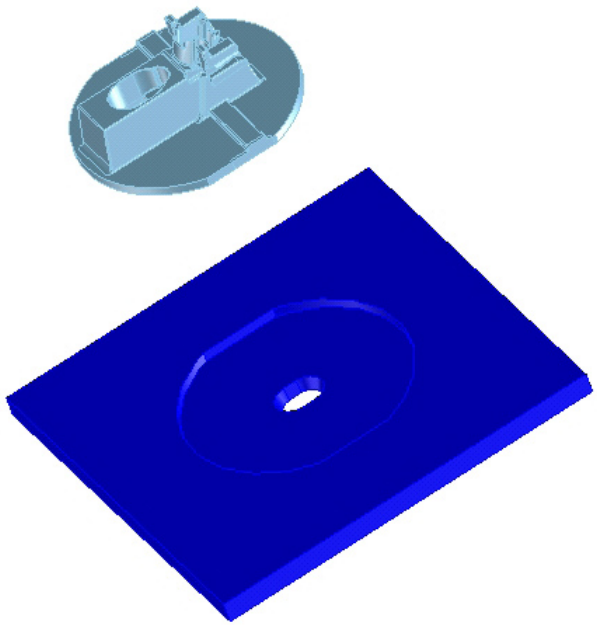

Figure D1: Overall view of base plate

Appendix E: USB data reporting format

The USB report has two formats, depending on if boot or report protocol is enabled. The following format is the boot protocol and is understood by USB aware BIOS.

	Bit 7							Bit 0
Byte 0	0	0	0	0	0	Middle	Right	Left
Byte 1	X	X	X	X	X	X	X	X
Byte 2	Y	Y	Y	Y	Y	Y	Y	Y

The following is the USB report protocol format and allows the additional wheel movement information in the fourth byte. When the wheel is moved forward the fourth byte reports a 0x01, and when moved backward the fourth byte reports 0xFF. When the wheel is idle, then this byte is assigned 0x00.

	Bit 7							Bit 0
Byte 0	0	0	0	0	0	Middle	Right	Left
Byte 1	X	X	X	X	X	X	X	X
Byte 2	Y	Y	Y	Y	Y	Y	Y	Y
Byte 3	R	R	R	R	R	R	R	F/R

Appendix F: Kit Components

The designer's kit contains components as follows:

Part Number	Description	Name	Quantity
ADNS-6010	Solid-State Optical Mouse Sensor	Sensor	5
ADNS-6120	Round Lens Plate	Lens	5
ADNS-6130-001	Trim Lens Plate	Lens	5
ADNS-6230-001	LASER Assembly Clip	LASER Clip	5
ADNV-6340	Single Mode Vertical Cavity Surface Emitting LASER (VCSEL)	LASER	5
ADNK-6013-SP01 CD	Includes Documentation and Support Files for ADNK-6013-SP01		1

Documentation
a. ADNB-6011-EV and ADNB-6012-EV Data Sheet
b. AN-5088 LASER Mouse Sensor Eye Safety Calculations

Hardware Support Files
a. ADNK-6013-SP01 BOM List
b. ADNK-6013-SP01 Schematic
c. IGES Base Plate Feature File
d. Gerber File

Software Support Files
a. Microcontroller Firmware

For product information and a complete list of distributors, please go to our web site: **www.avagotech.com**

Avago, Avago Technologies, and the A logo are trademarks of Avago Technologies Limited in the United States and other countries.
Data subject to change. Copyright © 2006 Avago Technologies Limited. All rights reserved.
AV01-0480EN - October 12, 2006