MGA-655T6

Low Noise Amplifier with Bypass Mode in Low Profile Package

Data Sheet

Description

Avago Technologies' MGA-655T6 is an economical, easy-to-use GaAs MMIC Low Noise Amplifier (LNA) with Bypass mode. The LNA has low noise and high linearity achieved through the use of Avago Technologies' proprietary 0.5 µm GaAs Enhancement-mode pHEMT process. The Bypass mode enables the LNA to be bypassed during high input signal power and reduce current consumption. It is housed in a low profile 2 x 1.3 x 0.4 mm 6-pin Ultra Thin Package. The compact footprint and low profile coupled with low noise, high linearity make the MGA-655T6 an ideal choice as a low noise amplifier for mobile and CPE receivers in the WiMax and WLL (2.5-4) GHz band.

Component Image

2.0 x 1.3 x 0.4 mm^3 6-Lead Ultra Thin Package

Note:
Packsage marking provides orientation and identification
"5F" = Product Code
"Y" = Year of Manufacture
"M" = Month of Manufacture

Pin Configuration

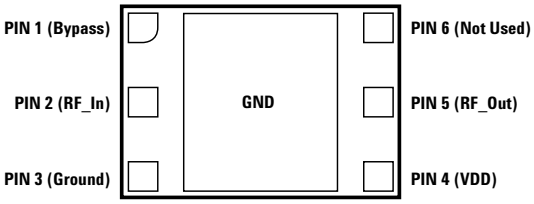

TOP VIEW

Attention: Observe precautions for handling electrostatic sensitive devices.
ESD Machine Model = 50 V
ESD Human Body Model = 200 V
Refer to Avago Technologies Application Note A004R: *Electrostatic Discharge, Damage and Control.*

Features

- Low nominal operating current
- Simple input/output matching network
- Broadband operation (2.5 – 4) GHz
- Adjustable bias current for gain/IP3 optimization
- Very low noise figure
- Bypass mode using a single pin
- Low current consumption in bypass mode, <100 µA
- Fully matched to 50 ohm in bypass mode
- High Linearity in LNA and bypass mode
- GaAs E-pHEMT Technology[1]
- Low profile package size: 2.0 x 1.3 x 0.4 mm^3
- Excellent uniformity in product specifications
- Tape-and-reel packaging option available

Typical Performance

- 3.5 GHz; Vdd = 3 V, Vbypass = 2.7 V (typ.),Ids = 10 mA (typ.)
- 14.7 dB gain
- 1.1 dB noise figure
- +5.5 dBm Input IP3
- -2 dBm input power at 1 dB gain compression
- 4.2 dB insertion loss in bypass mode
- 19 dBm IIP3 in bypass mode (pin = -20 dBm)
- <104 µA current consumption in bypass & shutdown mode

Applications

- Low noise amplifier for Wimax, Wireless Local Loop
- Other ultra low noise applications in the (2.5 – 4) GHz band

Note:
1. Enhancement mode technology employs positive Vgs, thereby eliminating the need of negative gate voltage associated with conventional depletion mode devices.

Absolute Maximum Rating[1] $T_A = 25°C$

Symbol	Parameter	Units	Absolute Max.
V_{dd}	Device Voltage, RF Output to Ground	V	4
V_{bypass}	Control Voltage	V	4
$P_{in,max}$	CW RF Input Power	dBm	+14
P_{diss}	Total Power Dissipation[3]	mW	66
T_j	Junction Temperature	°C	150
T_{STG}	Storage Temperature	°C	-65 to 150

Thermal Resistance [2,3]
($V_{dd} = 3.0$ V, $I_d = 10$ mA), $\theta jc = 75°C/W$

Notes:
1. Operation of this device in excess of any of these limits may cause permanent damage.
2. Thermal resistance measured using Infra-Red Measurement Technique.
3. For module substrate temperature, Tsub, >94°C derate the device power at 50 mW per °C rise in board (module belly) temperature.

Product Consistency Distribution Charts

Process Capability for Gain
LSL=12.5, Nominal=14.7, USL=17

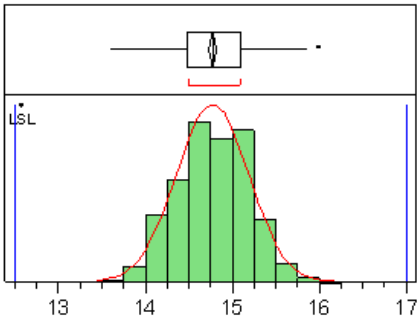

Figure 1. Gain @ 3.5 GHz , V_d 3 V; V_{bypass} 2.7 V

Process Capability for NF
Nominal=1.2, USL=1.6

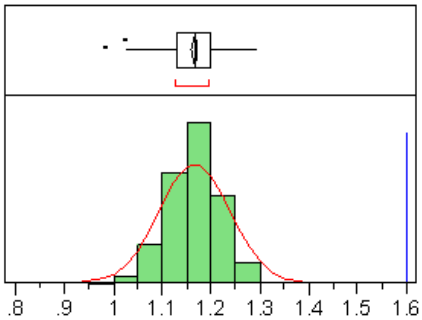

Figure 2. NF @ 3.5 GHz , V_d 3 V; V_{bypass} 2.7 V

Process Capability for Ids
Nominal=10.1, USL=14

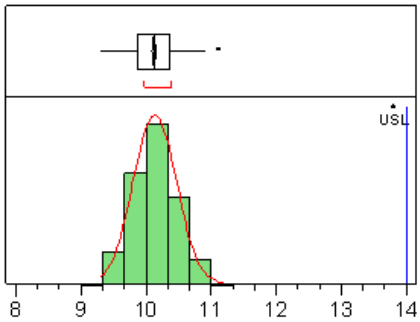

Figure 3. I_{ds} @ 3.5 GHz , V_d 3 V; V_{bypass} 2.7 V

Note:
Distribution data sample size is 500 samples taken from 3 different wafers and 3 different lots. Future wafers allocated to this product may have nominal values anywhere between the upper and lower limits.

Electrical Specifications

T_A = 25°C, V_{dd} = 3 V, V_{bypass} = 2.7 V, I_{ds} = 10 mA (typ), RF measurement at 3.5 GHz, measured on demo board (see Fig. 4) unless otherwise specified.

Symbol	Parameter and Test Condition	Units	Min.	Typ.	Max.
Gain	Gain	dB	12.8	14.7	16.0
Id	Bias Current	mA	-	10	14.0
IIP3 [8]	Input Third Order Intercept Point	dBm	-	+5.5	-
NF [9]	Noise Figure (Typ.Vbypass=2.7V)	dB	-	1.17	1.5
OP1dB	Output Power at 1dB Gain Compression	dBm	-	+12	-
S11	Input Return Loss, 50Ω source	dB	-	-9	-
S22	Output Return Loss, 50Ω load	dB	-	-13.5	-
S12	Reverse Isolation	dB	-	-24.7	-
$\|S21\|^2$ BYPASS	Bypass Mode Loss (Vbypass = 0)	dB	-	4.2	-
IIP3 BYPASS	Bypass Mode IIP3 (tested at -20dBm input Power)	dBm	-	+ 19	-
Id BYPASS	Bypass Mode current (Vbypass = 0)	μA	-	100	-

Notes:
1. Measurements at 3.5 GHz obtained using demo board described in Figure 4, with component values on Figure 5.
2. 3.5 GHz IIP3 test condition: F_{RF1} = 3.50 GHz, F_{RF2} = 3.505 GHz with input power of -20 dBm per tone.
3. Bypass Mode IIP3 test condition: F_{RF1} = 3.50 GHz, F_{RF2} = 3.505 GHz with input power of -20 dBm per tone.

Demo Board Layout

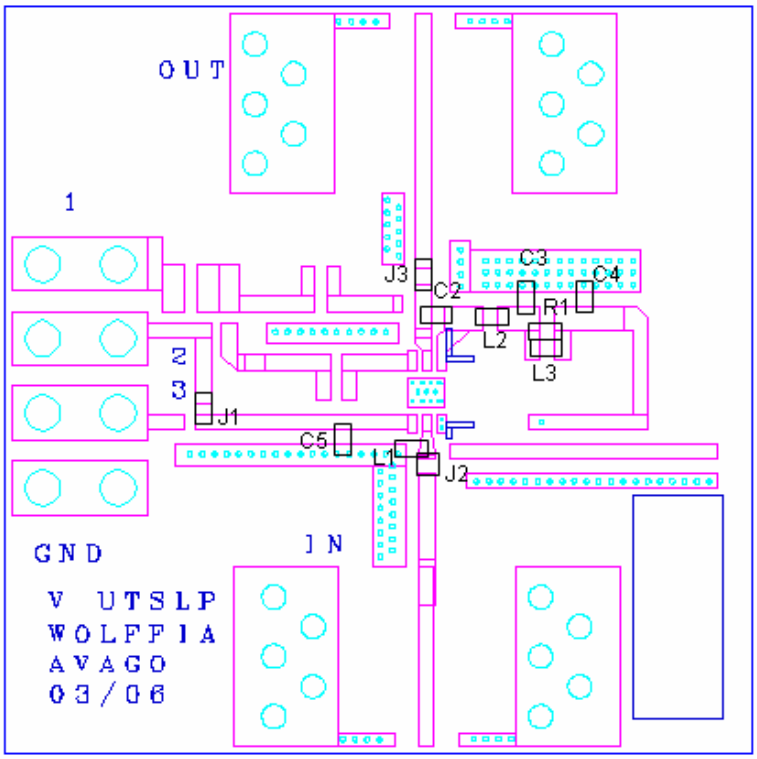

Part	Size	Value	P/N
L1	0402	1.2 nH	LLP1005 Series (TOKO)
L2	0402	1.0 nH	LLP1005 Series (TOKO)
L3	0402	10.0 nH	LLP1005 Series (TOKO)
C2	0402	4.7 pF	C1005C0G1H4R7C (TDK)
C3	0402	4.7 pF	C1005C0G1H4R7C (TDK)
C4	0402	0.1 uF	MCH155 Series (Rohm)
C5	0402	1000 pF	MCH155 Series (Rohm)
R1	0402	5.1 ohm	MCR Series (Rohm)
J1*	0402	0 ohm	RK73Z1E000 (KOA)
J2*, J3*			Copper Foil

*Jumpers indicated in the demo board drawing are not needed in actual application board; this is because generic demo boards were used for development.

Figure 4. Demo board layout diagram*

*Application Notes:

1. Performance in a specified frequency band can be optimized by changing component values in the demoboard above to suit the application at that frequency. The following graphs show components used to demonstrate performance at the (3 - 4) GHz band.
2. Operational Logic of Bypass pin (Pin 1):
   - Normal LNA operation: [2 to 2.7] volt,
   - Bypass mode: [0 to 0.2] volt

   Pin 1 voltage in LNA mode can be varied to enable the LNA bias current to be adjusted.

Demo Board Schematic for 3.5 GHz Application

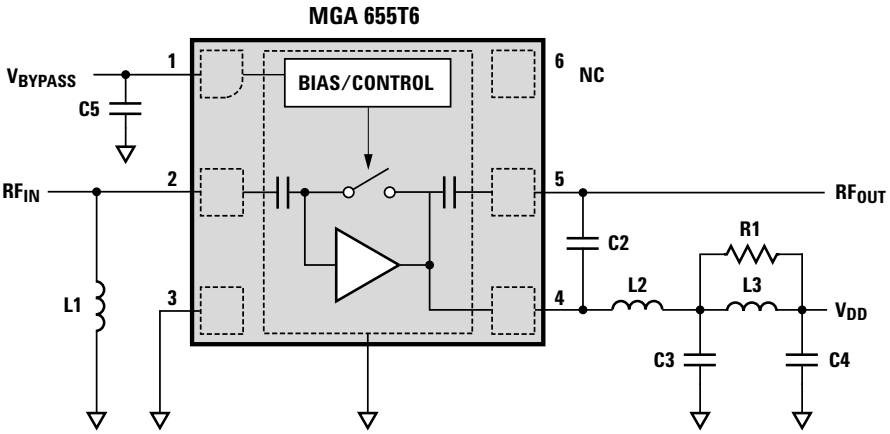

Notes:

1. L1 is an input matching inductor.
2. L2 and C2 form the output matching network.
3. R1&L3 is a network that isolates the measurement demoboard from external disturbances. C4 and C5 migrate the effect of external noise pickup on the V_{dd} and V_{bypass} lines. These components are not required in actual operation.
4. C3 is a RF bypass capacitor.

Figure 5. Demo board schematic diagram

MGA-655T6 Typical Performance (3.5 GHz Match)

T_A = +25°C, V_{dd} = 3 V, I_{ds} = 10 mA (V_{bypass} = 2.7 V),
RF measurement at 3. GHz, input signal = CW unless stated otherwise.

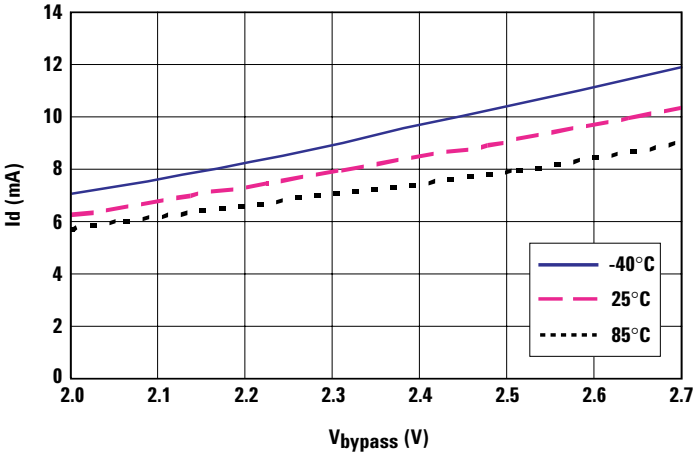

Figure 6. I_d vs. V_{bypass} vs. temperature (V_{dd} = 3 V)

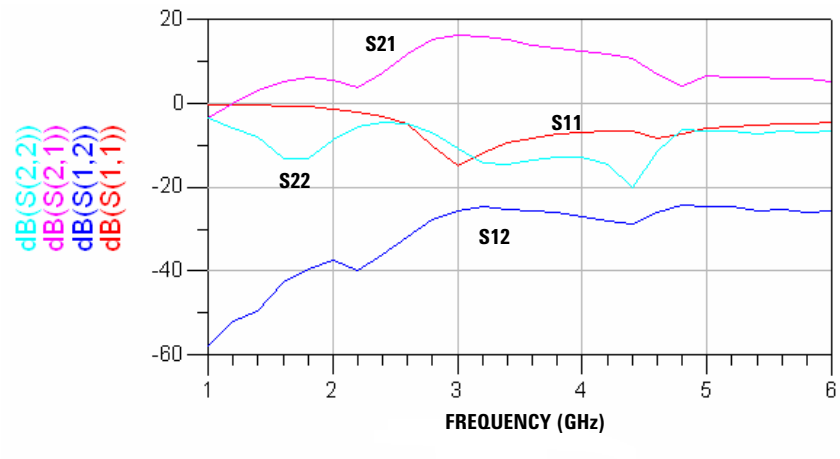

Figure 7. LNA mode S21, S11, S22, S12 vs. frequency

LNA Mode Plots (3.5 GHz Match); V_{dd} = 3 V

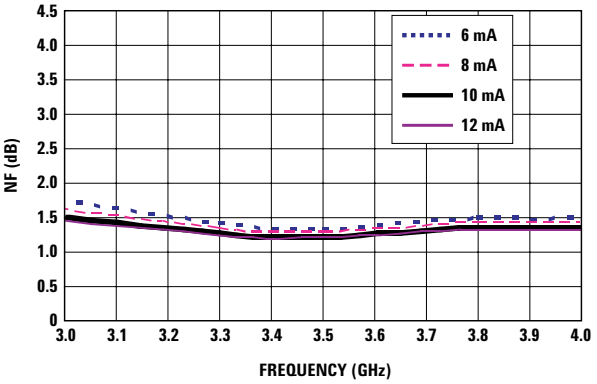

Figure 8. LNA mode noise figure vs. frequency vs Id

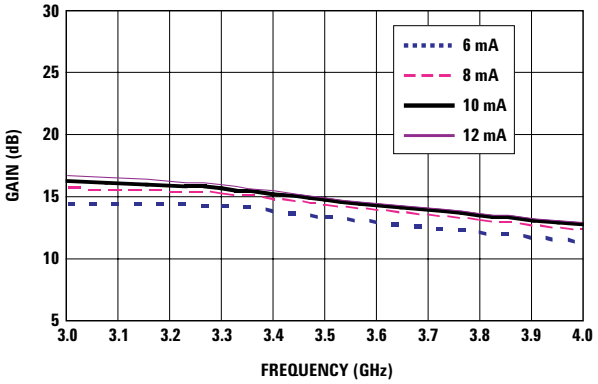

Figure 9. LNA mode gain vs. frequency vs. Id

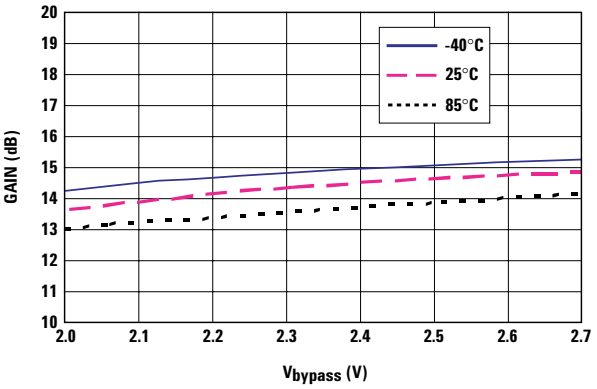

Figure 10. LNA mode gain vs. V_{bypass} vs. temperature

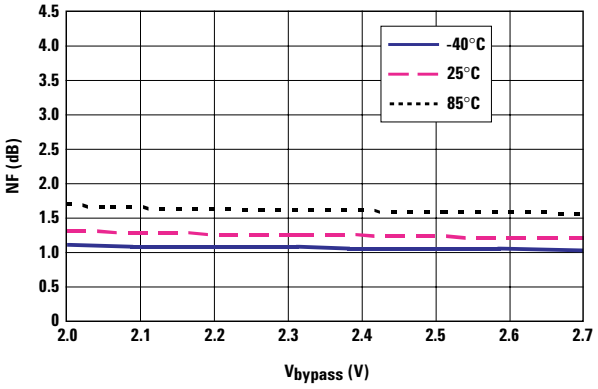

Figure 11. LNA noise figure vs. V_{bypass} vs. Temperature

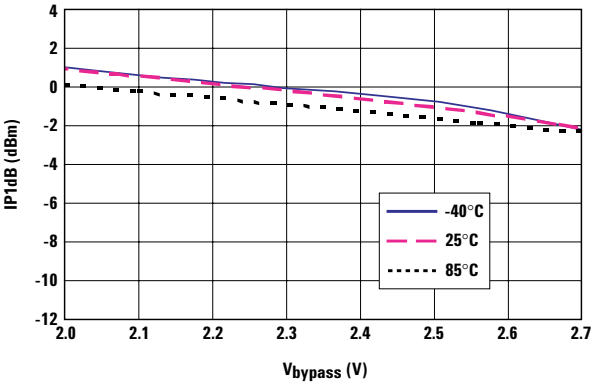

Figure 12. LNA mode IP1dB vs. V_{bypass} vs. temperature

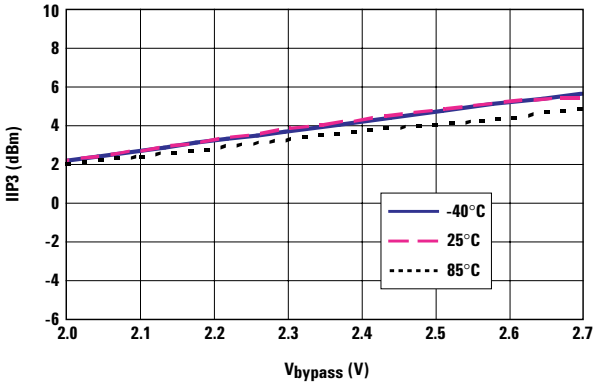

Figure 13. LNA mode IIP3 vs. V_{bypass} vs. temperature

Bypass Mode Plots (3.5 GHz match) ($V_{dd} = 3$ V; $V_{bypass} = 0$ V)

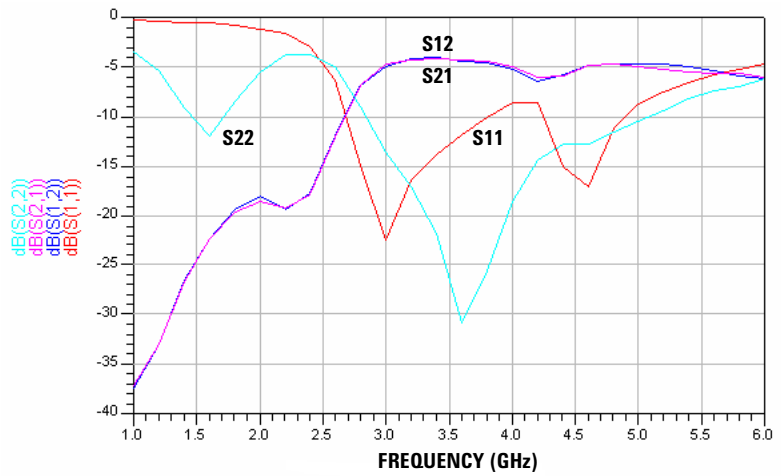

Figure 14. Bypass mode S21, S11, S22, S12 vs. frequency

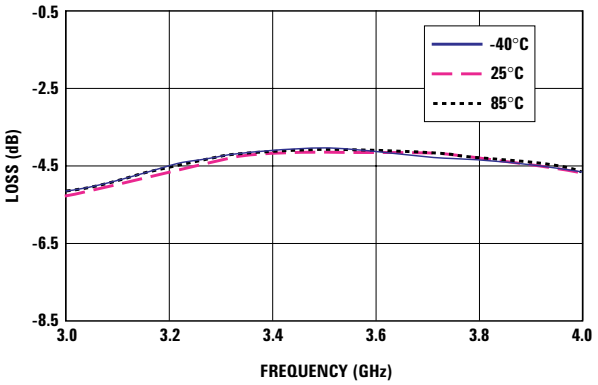

Figure 15. Bypass mode loss vs. frequency vs. temperature

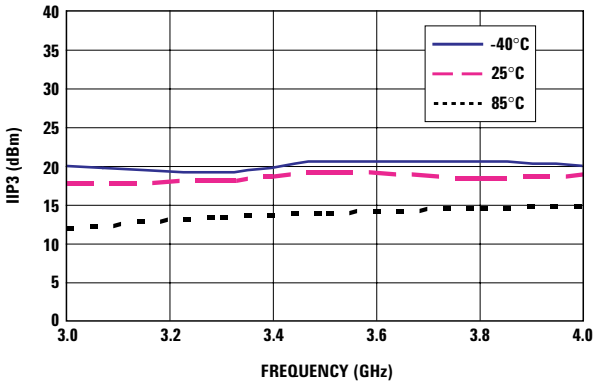

Figure 16. Bypass mode IIP3 vs. frequency vs. temperature

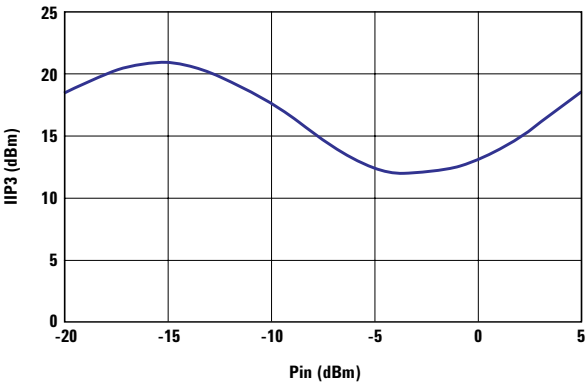

Figure 17. Bypass mode IIP3 vs. input power

Test Circuit for S Parameters Measurement

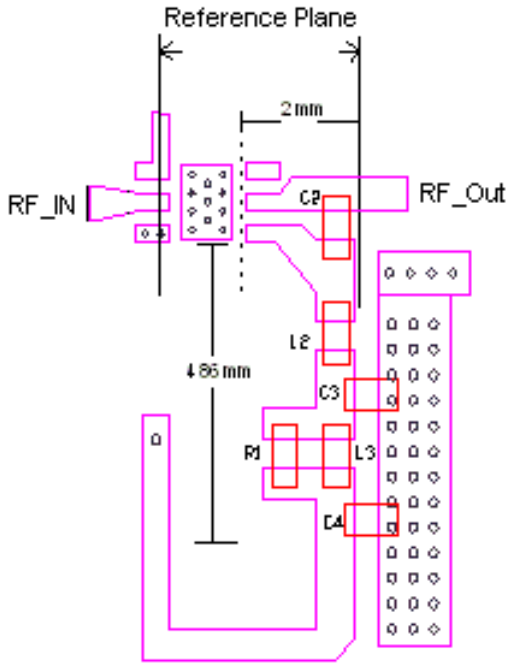

Part	Size	Value	P/N
L2	0402	1.0 nH	LLP1005Series (TOKO)
L3	0402	10.0 nH	LLP1005 Series (TOKO)
R1	0402	5.1 ohm	MCR Series (Rohm)
C2	0402	4.7 pF	C1005C0G1H4R7C (TDK)
C3	0402	4.7 pF	C1005C0G1H4R7C (TDK)
C4	0402	0.1 uF	MCH155 Series (Rohm)

Figure 18. S parameters test circuit on demo board

*PCB material is 10 mils Rogers RO4850.

Notes:
1. L2 and C2 form the output matching network.
2. R1&L3 is a network that isolates the measurement demoboard from external disturbances. C4 migrate the effect of external noise pickup on the V_{dd} and V_{bypass} lines. These components are not required in actual operation.
3. C3 is a RF bypass capacitor.

MGA-655T6 LNA Mode Typical Scattering Parameters at 25°C, V_{dd} = 3 V; V_{bypass} = 2.7 V

Freq. (GHz)	MagS11	AngS11	MagS21	AngS21	MagS12	AngS12	MagS22	AngS22
0.1	0.99	-4.82	0.18	-54.73	0.00	77.31	0.99	-20.98
0.3	0.98	-14.42	0.76	-83.55	0.00	23.69	0.95	-60.34
0.5	0.96	-23.81	1.46	-102.99	0.00	151.21	0.88	-92.87
0.7	0.94	-32.62	2.20	-121.88	0.00	143.03	0.80	-119.52
0.9	0.92	-41.29	2.82	-140.82	0.00	135.98	0.70	-140.63
1.1	0.89	-49.96	3.47	-159.52	0.01	128.42	0.58	-159.80
1.3	0.86	-57.98	3.92	-179.83	0.01	126.33	0.42	-174.01
1.5	0.82	-65.62	4.00	160.17	0.01	111.41	0.26	-172.61
1.7	0.79	-72.45	3.65	138.96	0.01	92.17	0.23	-132.69
1.9	0.75	-78.10	2.89	123.85	0.01	81.46	0.39	-127.32
2.1	0.73	-81.96	1.97	118.21	0.01	75.86	0.54	-139.26
2.3	0.73	-85.91	1.50	143.58	0.01	95.80	0.65	-160.85
2.5	0.74	-91.52	2.32	158.05	0.01	116.62	0.65	174.95
2.7	0.74	-98.87	3.47	150.47	0.02	120.27	0.61	146.38
2.9	0.73	-107.65	4.42	132.71	0.03	107.58	0.49	114.20
3.1	0.68	-116.58	4.87	114.06	0.04	89.55	0.36	78.57
3.3	0.61	-124.52	4.96	97.21	0.05	76.76	0.28	40.12
3.5	0.55	-132.98	4.83	82.27	0.05	66.58	0.24	2.25
3.7	0.49	-141.40	4.63	68.74	0.05	55.35	0.24	-26.25
3.9	0.43	-151.13	4.43	55.98	0.05	46.06	0.24	-47.04
4.1	0.38	-162.66	4.23	42.61	0.05	39.66	0.21	-62.70
4.3	0.32	-175.73	3.93	25.12	0.04	38.84	0.13	-58.34
4.5	0.24	-178.79	2.73	-2.09	0.04	56.68	0.30	-7.47
4.7	0.31	-175.14	1.56	31.48	0.06	40.04	0.55	-51.67
4.9	0.36	169.19	2.18	32.22	0.06	23.95	0.54	-76.97
5.1	0.38	158.40	2.31	23.56	0.06	16.88	0.51	-91.54
5.3	0.41	150.23	2.28	15.38	0.06	10.31	0.50	-101.47
5.5	0.43	144.80	2.20	8.28	0.06	6.63	0.51	-110.21
5.7	0.45	140.98	2.11	1.99	0.06	1.99	0.51	-117.67
5.9	0.47	138.93	2.00	-3.58	0.05	-1.49	0.52	-125.32
6	0.48	138.24	1.96	-6.31	0.05	-2.33	0.53	-128.66

MGA-655T6 Bypass Mode Typical Scattering Parameters at 25°C, V_{dd} = 3 V; V_{bypass} = 0 V

Freq. (GHz)	MagS11	AngS11	MagS21	AngS21	MagS12	AngS12	MagS22	AngS22
0.1	0.97	-7.28	0.01	142.97	0.01	139.82	0.99	-22.80
0.3	0.91	-17.17	0.05	89.30	0.05	89.03	0.94	-63.94
0.5	0.86	-25.14	0.07	59.94	0.07	59.38	0.88	-96.63
0.7	0.84	-32.80	0.07	44.98	0.07	45.21	0.81	-122.42
0.9	0.82	-40.43	0.06	45.87	0.06	45.70	0.71	-142.61
1.1	0.80	-48.28	0.06	66.44	0.06	66.09	0.60	-160.38
1.3	0.78	-55.55	0.10	75.80	0.10	76.00	0.44	-172.95
1.5	0.76	-62.57	0.14	69.63	0.14	70.17	0.29	-171.26
1.7	0.74	-68.26	0.18	54.17	0.18	53.81	0.28	-137.48
1.9	0.73	-73.76	0.19	38.40	0.18	38.92	0.43	-129.99
2.1	0.73	-79.18	0.16	26.89	0.15	26.88	0.58	-142.11
2.3	0.74	-85.61	0.11	33.02	0.11	33.66	0.67	-161.21
2.5	0.73	-94.09	0.13	76.20	0.13	76.50	0.66	173.91
2.7	0.69	-102.95	0.25	80.80	0.25	80.80	0.57	147.09
2.9	0.62	-110.91	0.39	64.78	0.39	64.63	0.38	113.30
3.1	0.54	-115.41	0.48	45.90	0.48	45.74	0.20	68.94
3.3	0.48	-118.05	0.53	29.54	0.53	29.38	0.12	-4.82
3.5	0.44	-122.23	0.55	16.01	0.55	15.66	0.18	-57.68
3.7	0.40	-129.27	0.56	4.25	0.56	3.85	0.23	-80.22
3.9	0.34	-140.30	0.56	-6.59	0.56	-6.57	0.27	-92.92
4.1	0.23	-155.48	0.54	-16.23	0.54	-16.47	0.30	-101.53
4.3	0.10	-110.11	0.50	-21.91	0.50	-22.06	0.33	-109.33
4.5	0.28	-107.58	0.52	-24.79	0.52	-25.18	0.36	-117.51
4.7	0.33	-132.89	0.54	-32.18	0.54	-32.62	0.37	-123.92
4.9	0.35	-151.60	0.54	-40.12	0.54	-40.45	0.39	-130.16
5.1	0.37	-166.62	0.53	-47.41	0.52	-47.10	0.41	-136.46
5.3	0.39	-178.39	0.51	-53.78	0.51	-53.41	0.44	-142.63
5.5	0.41	173.20	0.49	-59.62	0.49	-59.08	0.47	-149.13
5.7	0.44	166.81	0.48	-64.30	0.48	-64.19	0.49	-155.36
5.9	0.47	162.70	0.46	-68.22	0.46	-68.22	0.52	-162.14
6	0.48	161.30	0.45	-70.39	0.46	-70.11	0.53	-165.23

MGA -655T6 LNA Mode typical Noise Parameters at 25 °C, Vdd=3V; Vbypass=2.7V; Idd=10mA

Freq (GHz)	FMIN (dB)	GAMMA,Mag	OPT,Ang	Rn @ 50 Ohm
2	0.96	0.55	71.4	0.25
2.4	0.92	0.59	83.2	0.29
2.6	0.85	0.51	81.2	0.25
3.3	0.815	0.36	99.4	0.22
3.5	0.745	0.47	105.8	0.21
3.8	0.715	0.46	111.5	0.2
4	0.698	0.55	110.6	0.21
5	0.9	0.3	145.2	0.17
5.5	0.97	0.39	178.4	0.14
5.8	1.07	0.29	-173.1	0.13
6	1.16	0.32	-162.7	0.14

Package Dimensions

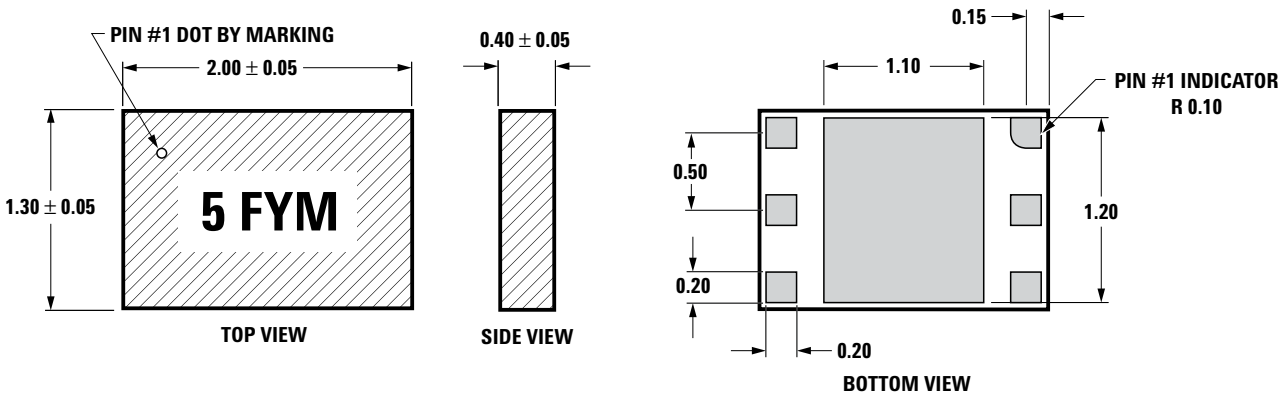

PCB Land Patterns and Stencil Design

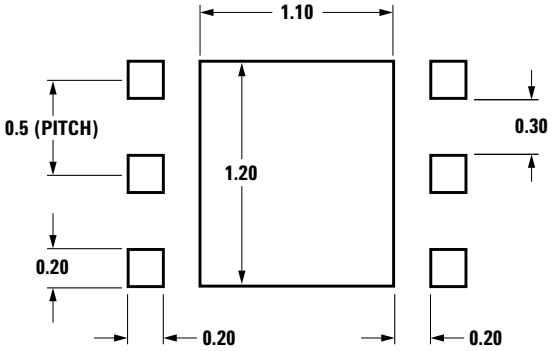

PCB Land Pattern (dimensions in mm)

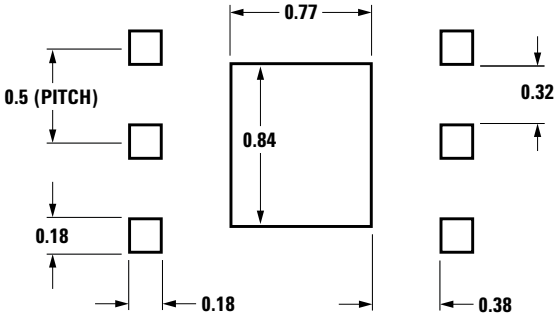

Stencil Outline Drawing (dimensions in mm)

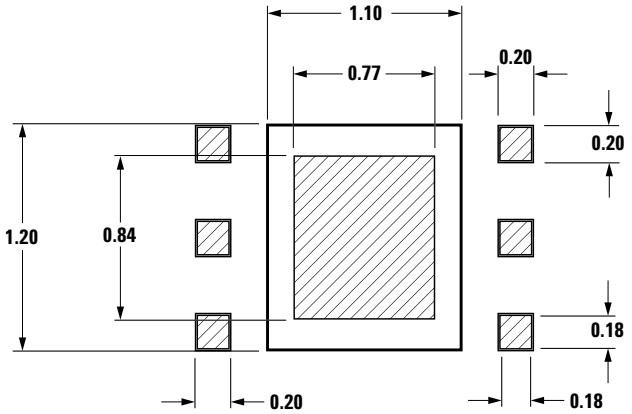

Combined PCB and Stencil Layouts (dimensions in mm)

Device Orientation

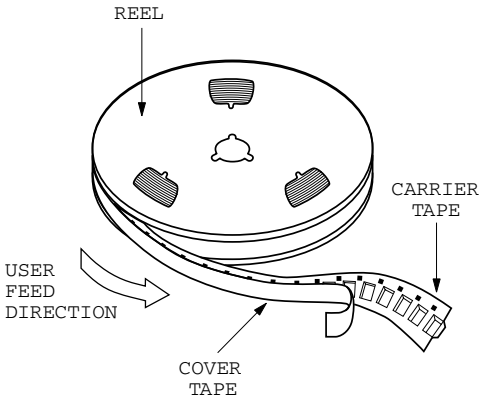

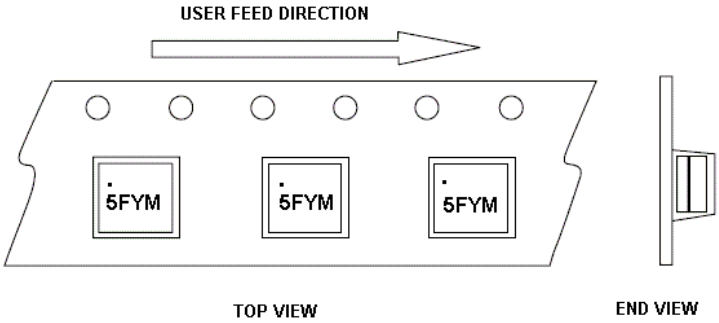

Tape Dimensions

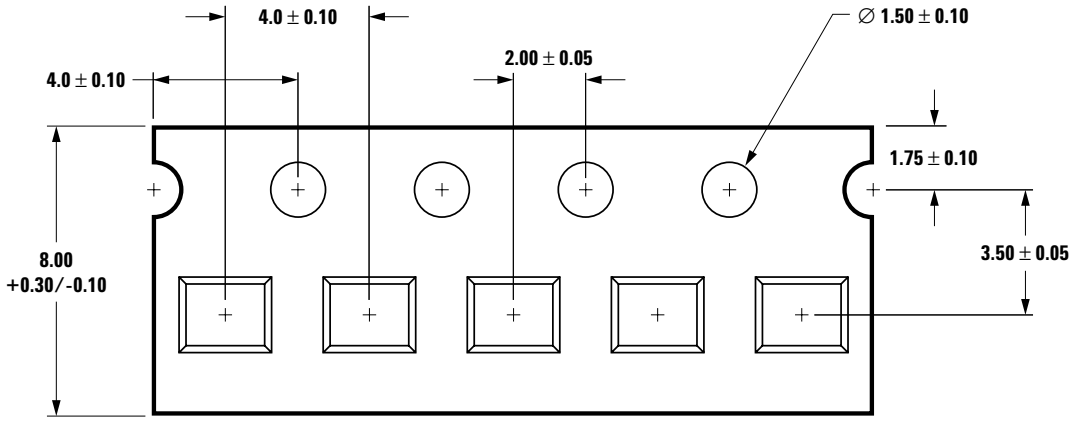

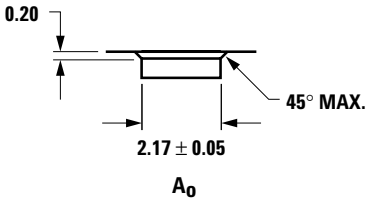

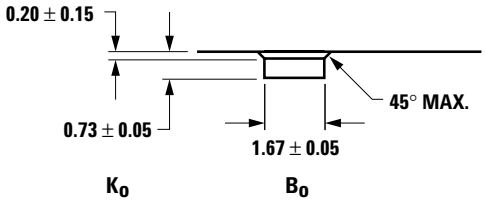

Reel Dimensions

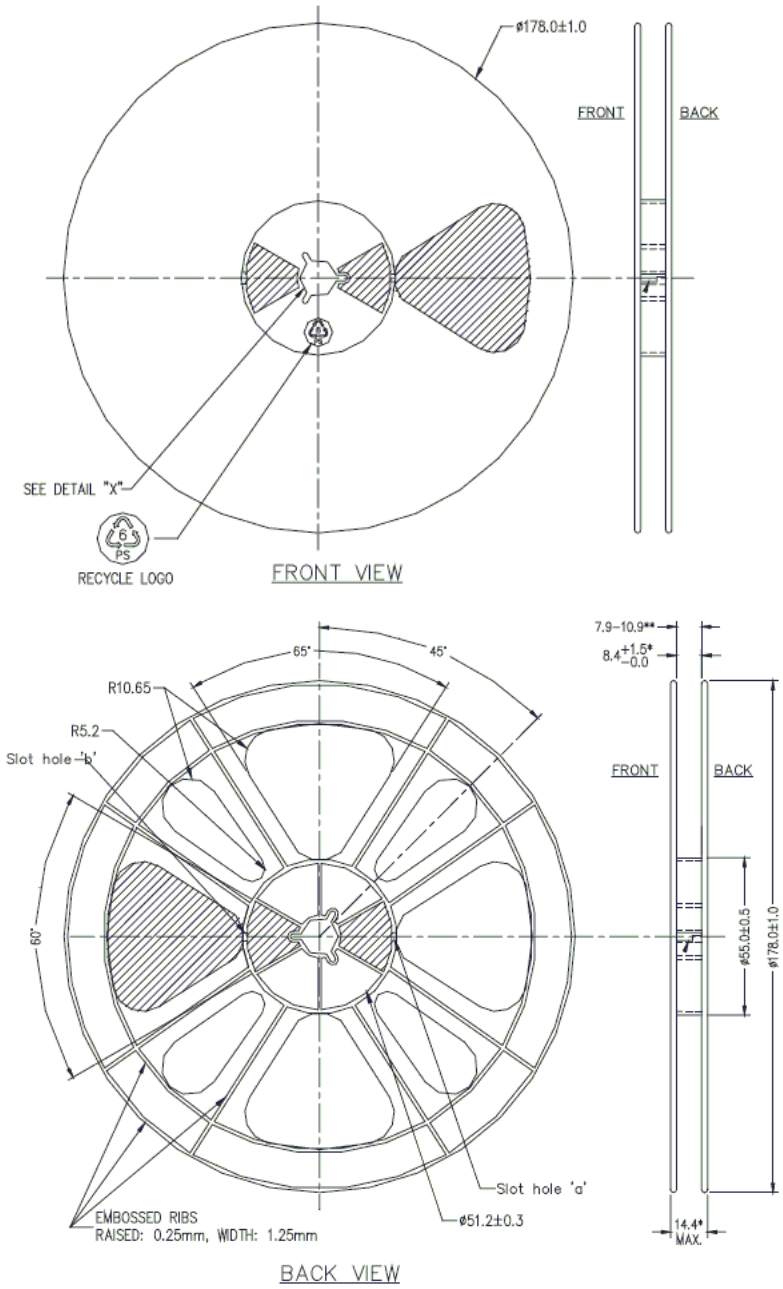

Part Number Ordering Information

Part Number	Quantity	Container
MGA-655T6-BLKG	100	Antistatic Bag
MGA-655T6-TR1G	3000	7" Reel
MGA-655T6-TR2G	10000	13" Reel

For product information and a complete list of distributors, please go to our website: **www.avagotech.com**

Avago, Avago Technologies, and the A logo are trademarks of Avago Technologies Limited in the United States and other countries.
Data subject to change. Copyright © 2007 Avago Technologies Limited. All rights reserved.
AV02-0322EN May 14, 2007