DAB-GPS

Revision	Date	
0.1	12/06/2008	- Initial version
0.2	20/06/2008	- RTC removed

0.2	20/06/2008		GH	
0.1	12/06/2008		GH	
Rev	Date	Revision History	Drawn	Approuved

Scale :	Product : DAB-GPS	CALAO SYSTEMS
Sheet Size : A3	Document Number : SCH-00037-A01	
Folio : 1 / 3	Title : HISTORY	www.calao-systems.com

This drawing may not be reproduced without CALAO Systems prior written consent

+3.3V REGULATOR

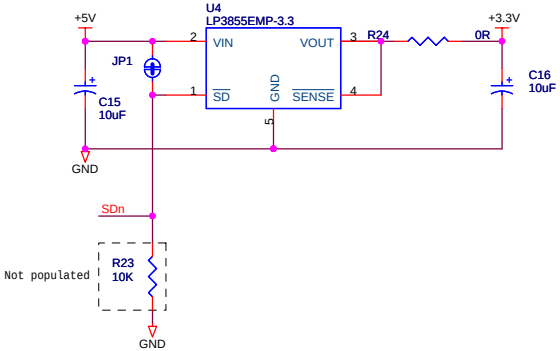

VDDBU REGULATOR

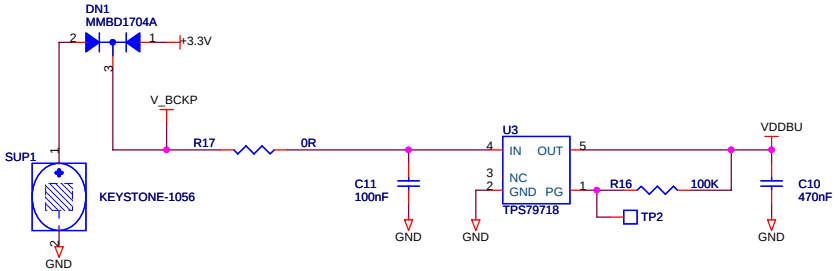

SD/MMC

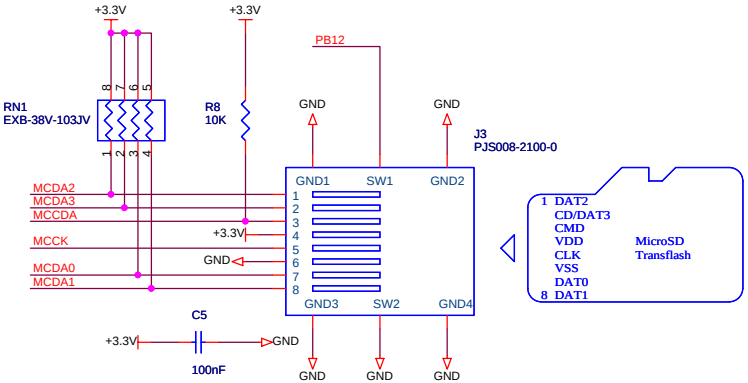

DAUGHTER BOARD CONNECTOR

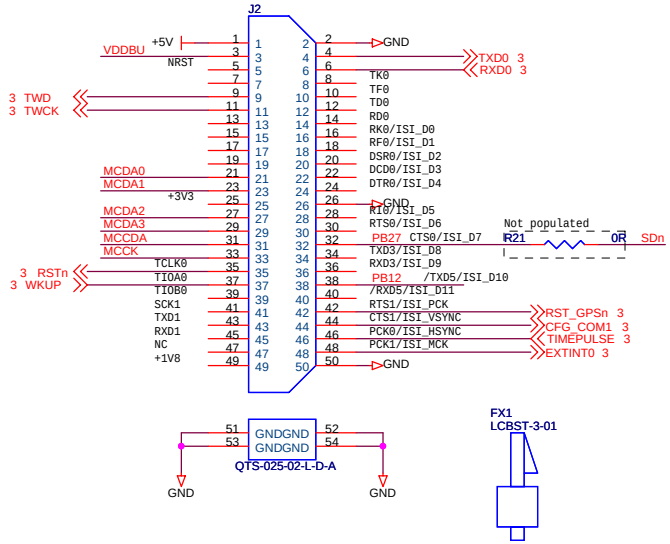

0.2	20/06/2008		GH	
0.1	12/06/2008		GH	
Rev	Date	Revision History	Drawn	Approuved

Scale :	Product : DAB-GPS	CALAO SYSTEMS www.calao-systems.com
Sheet Size : A3	Document Number : SCH-00037-A02	
Folio : 2 / 3	Title : RTC & SD/MMC SOCKET	

This drawing may not be reproduced without CALAO Systems prior written consent

LEA-5x GPS receiver module

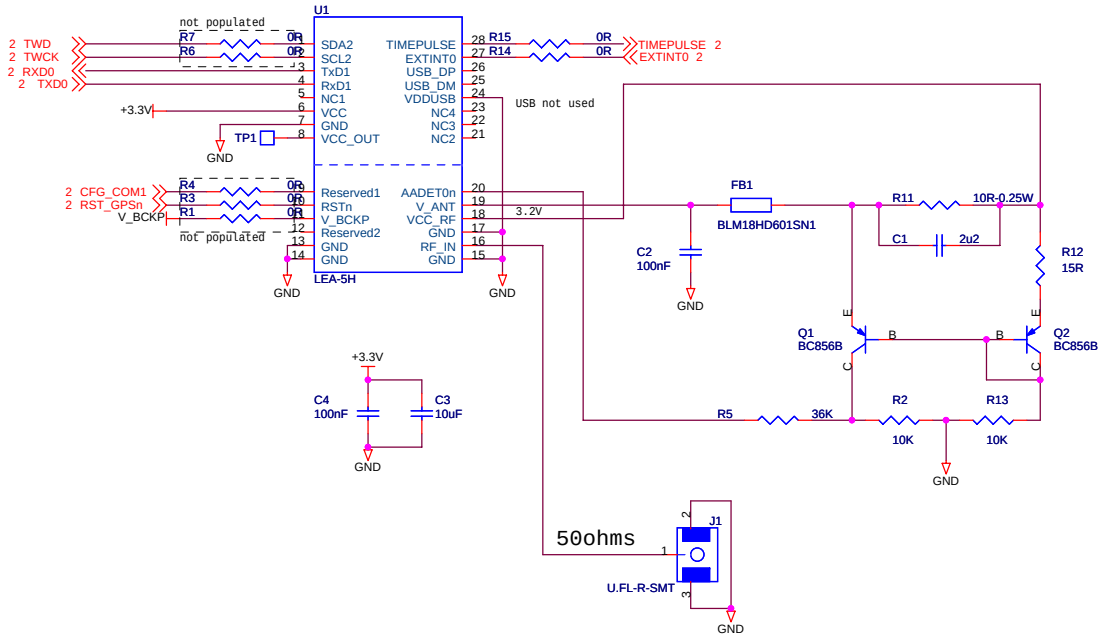

Antennas should only be connected to the receiver when the receiver is not powered.
Do not connect or disconnect the Antenna when the u-blox 5 receiver is running as the receiver calibrates the noise floor on power-up.
Connecting the antenna after power-up can result in prolonged acquisition time.

GPS module	R11	R12	R13	R14	R16	R17	R19
LEA-5H		X		X			X
LEA-5S		X		X	X		X
LEA-5A		X		X	X		X
LEA-5T		X		X			X

X= populated

3-axis magnetic sensor and 3-axis accelerometer

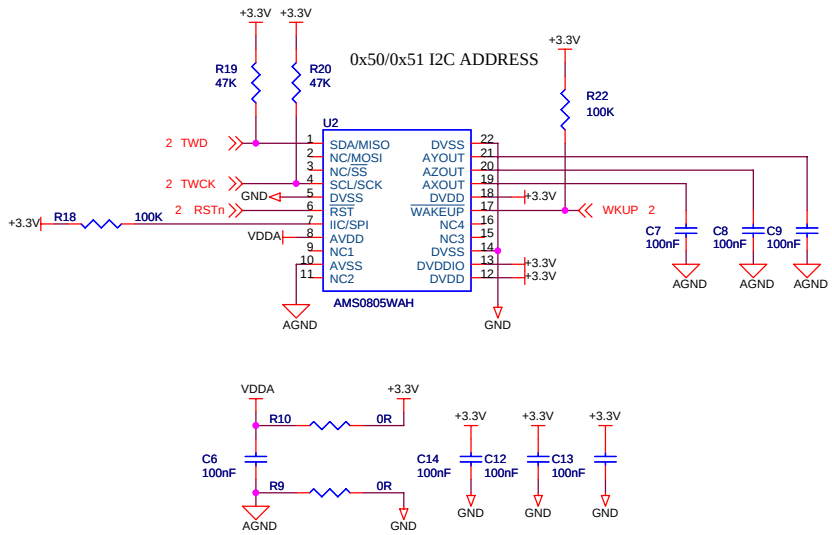

Rev	Date	Revision History	Drawn	Approuved
0.2	20/06/2008		GH	
0.1	12/06/2008		GH	

Scale : A3

Product : DAB-GPS

Sheet Size :

Document Number : SCH-00037-A02

Folio : 3 / 3

Title : GPS & 3D magnetic sensor and accelerometer

www.calao-systems.com

This drawing may not be reproduced without CALAO Systems prior written consent