# ST3241EB
# ST3241EC

## ±15 kV ESD protected 3 to 5.5 V, 400 kbps, RS-232 transceiver with auto-power-down

## Features

- ESD protection for RS-232 I/O pins:
  ±8 kV IEC 1000-4-2 contact discharge
  ±15 kV human body model
- 1 µA supply current achieved when in auto-power-down
- 250 kbps minimum guaranteed data rate
- Guaranteed 6 V/ms slew rate range
- Guaranteed mouse drive ability
- 0.1 µF external capacitors
- Meet EIA/TIA-232 specifications down to 3 V
- Available in SSOP-28 and TSSOP28 packages

SSOP TSSOP

## Description

The ST3241E device consists of 3 drivers, 5 receivers and a dual charge-pump circuit. The device meets the requirements of EIA/TIA and V.28/V.24 communication standards providing high data rate capability and enhanced electrostatic discharge (ESD) protection. All transmitter outputs and receiver input are protected to ±8 kV USING IEC 1000-4-2 contact discharge and ±15 kV using the human body model. The receiver R2 is always active to implement a wake-up feature for serial port.

The ST3241E has a proprietary low-dropout transmitter output stage enabling true RS-232 performance from a 3.0 V to 5.5 V supply with a dual charge pump. The device is guaranteed to run at data rates of 250 kbps while maintaining RS-232 output levels.

It is a complete serial port (3 drivers, 5 receivers) intended for notebook or sub-notebook computers. Receivers R1 and R2 have extra outputs in addition to their standard outputs. These extra output are always active.

Typical application are in notebook, sub-notebook, palmtop computers, battery-powered equipment, hand-held equipment, peripherals and printers.

**Table 1. Device summary**

| Order code | Temperature range | Package | Packaging |
|---|---|---|---|
| ST3241ECPR | 0 to 70°C | SSOP-28 (tape and reel) | 1350 parts per reel |
| ST3241EBPR | -40 to 85°C | SSOP-28 (tape and reel) | 1350 parts per reel |
| ST3241EBTR | -40 to 85°C | TSSOP28 (tape and reel) | 2500 parts per reel |

# Contents

1 Pin configuration . . . . . 3

2 Maximum ratings . . . . . 5

3 Electrical characteristics . . . . . 6

4 Application . . . . . 8

5 Package mechanical data . . . . . 9

6 Revision history . . . . . 14

# 1 Pin configuration

**Figure 1. Pin configuration**

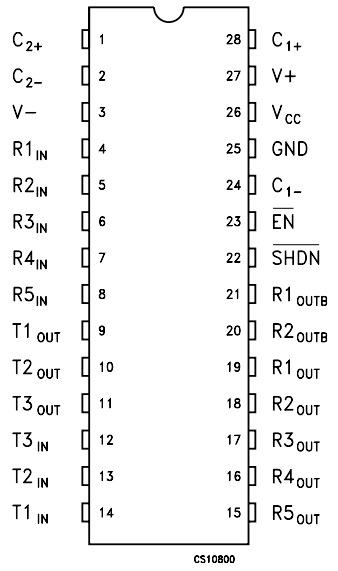


**Table 2. Pin description**

| Pin n° | Symbol | Name and function |
|---|---|---|
| 1 | $C_2$+ | Positive terminal of inverting charge pump capacitor |
| 2 | $C_2$- | Negative terminal of inverting charge pump capacitor |
| 3 | V- | -5.5V Generated by the Charge Pump |
| 4 | $R1_{IN}$ | First receiver input voltage |
| 5 | $R2_{IN}$ | Second Receiver Input Voltage |
| 6 | $R3_{IN}$ | Third receiver input voltage |
| 7 | $R4_{IN}$ | Fourth receiver input voltage |
| 8 | $R5_{IN}$ | Fifth receiver input voltage |
| 9 | $T1_{OUT}$ | First transmitter output voltage |
| 10 | $T2_{OUT}$ | Second transmitter output voltage |
| 11 | $T3_{OUT}$ | Third transmitter output voltage |
| 12 | $T3_{IN}$ | Third transmitter input voltage |
| 13 | $T2_{IN}$ | Second transmitter input voltage |
| 14 | $T1_{IN}$ | First transmitter input voltage |
| 15 | $R5_{OUT}$ | Fifth Receiver Output Voltage |
| 16 | $R4_{OUT}$ | Fourth receiver output voltage |
| 17 | $R3_{OUT}$ | Third receiver output voltage |

**Table 2. Pin description (continued)**

| Pin n° | Symbol | Name and function |
|---|---|---|
| 18 | $R2_{OUT}$ | Second receiver output voltage |
| 19 | $R1_{OUT}$ | First receiver output voltage |
| 20 | $R2_{OUTB}$ | Non-inverting complementary receiver output, always active for wake-up |
| 21 | $R1_{OUTB}$ | Non-inverting complementary receiver output, always active for wake-up |
| 22 | SHDN | Shutdown control. Active low. |
| 23 | EN | Receiver enable. Active low |
| 24 | $C_1$- | Negative terminal of voltage- charge pump capacitor |
| 25 | GND | Ground |
| 26 | $V_{CC}$ | Supply voltage |
| 27 | V+ | 5.5V Generated by the charge pump |
| 28 | $C_1$+ | Positive terminal of voltage- Charge pump capacitor |

**Table 3. Shutdown and enable control truth table**

| $\overline{SHDN}$ | $\overline{EN}$ | $T_{OUT}$ | $R_{OUT}$ | $R_{OUTB}$ |
|---|---|---|---|---|
| 0 | 0 | HIGH Z | ACTIVE | ACTIVE |
| 0 | 1 | HIGH Z | HIGH Z | ACTIVE |
| 1 | 0 | ACTIVE | ACTIVE | ACTIVE |
| 1 | 1 | ACTIVE | HIGH Z | ACTIVE |

# 2 Maximum ratings

**Table 4. Absolute maximum ratings**

| Symbol | Parameter | Value | Unit |
|---|---|---|---|
| $V_{CC}$ | Supply voltage | -0.3 to 6 | V |
| V+ | Extra positive voltage (*Note: 1*) | ($V_{CC}$ -0.3) to 7 | V |
| V- | Extra negative voltage (*Note: 1*) | 0.3 to -7 | V |
| V+ +\|V-\| | (*Note: 1*) | 13 | V |
| $\overline{SHDN}$, $\overline{EN}$, $T_{IN}$ | Input voltage | -0.3 to 6 | V |
| $R_{IN}$ | Receiver input voltage range | ±25 | V |
| $T_{OUT}$ | Transmitter output voltage range | ±13.2 | V |
| $R_{OUT}$ $R_{OUTB}$ $\overline{INVALID}$ | Receiver output voltage range | -0.3 to ($V_{CC}$ + 0.3) | V |
| $t_{SHORT}$ | Short circuit duration on $T_{OUT}$ (one at a time) | Continuous | |
| $T_{stg}$ | Storage temperature range | -65 to 150 | °C |

*Note: Absolute maximum ratings are those values beyond which damage to the device may occur. Functional operation under these condition is not implied.*

*Note: 1 V+ and V- can have a maximum magnitude of +7 V, but their absolute addition cannot exceed 13 V.*

**Table 5. ESD performance: transmitter outputs, receiver inputs**

| Symbol | Parameter | Test conditions | Min. | Typ. | Max. | Unit |
|---|---|---|---|---|---|---|
| ESD | ESD protection voltage | Human body model | ±15 | | | kV |
| ESD | ESD protection voltage | IEC 1000-4-2 (contact discharge) | ±8 | | | kV |

# 3 Electrical characteristics

**Table 6. Electrical characteristics**
(C1 - C4 = 0.1 µF, $V_{CC}$ = 3 V to 5.5 V, $T_A$ = -40 to 85 °C, unless otherwise specified. Typical values are referred to $T_A$ = 25 °C)

| Symbol | Parameter | Test conditions | Min. | Typ. | Max. | Unit |
|---|---|---|---|---|---|---|
| $I_{SUPPLY}$ | Supply current | No load $V_{CC}$ = 3.3V or 5V, $T_A$ = 25°C | | 0.3 | 1 | mA |
| $I_{SHDN}$ | Shutdown supply current | $\overline{SHDN}$ = GND, $T_A$ = 25°C | | 1 | 10 | µA |

**Table 7. Logic input and receiver output electrical characteristics**
($C_1$ - $C_4$ = 0.1 µF, $V_{CC}$ = 3 V to 5.5 V, $T_A$ = -40 to 85 °C, unless otherwise specified.

| Symbol | Parameter | Test conditions | Min. | Typ. | Max. | Unit |
|---|---|---|---|---|---|---|
| $V_{TIL}$ | Input logic threshold low | $T_{IN}$, $\overline{EN}$, $\overline{SHDN}$ | | | 0.8 | V |
| $V_{TIH}$ | Input logic threshold high | $V_{CC}$ = 3.3V<br>$V_{CC}$ = 5V | 2<br>2.4 | | | V<br>V |
| $I_{IL}$ | Input leakage current | $T_{IN}$, $\overline{EN}$, $\overline{SHDN}$ | | ±0.01 | ±1.0 | µA |

**Table 8. Receiver output electrical characteristics**
($C_1$ - $C_4$ = 0.1 µF, $V_{CC}$ = 3 V to 5.5 V, $T_A$ = -40 to 85 °C, unless otherwise specified.

| Symbol | Parameter | Test conditions | Min. | Typ. | Max. | Unit |
|---|---|---|---|---|---|---|
| $I_{OL}$ | Output Leakage Current | $R_{OUT}$, $\overline{EN}$, Receiver Disabled | | ±0.05 | ±10 | µA |
| $V_{OL}$ | Output Voltage Low | $I_{OUT}$ = 1.6mA | | | 0.4 | V |
| $V_{OH}$ | Output Voltage High | $I_{OUT}$ = -1mA | | $V_{CC}$-0.6 | $V_{CC}$-0.1 | V |

**Table 9. Transmitter electrical characteristics**
($C_1$ - $C_4$ = 0.1 µF, $V_{CC}$ = 3 V to 5.5 V, $T_A$ = -40 to 85 °C, unless otherwise specified.

| Symbol | Parameter | Test conditions | Min. | Typ. | Max. | Unit |
|---|---|---|---|---|---|---|
| $V_{TOUT}$ | Output voltage swing | All transmitter outputs are loaded with 3kΩ to GND | ±5 | ±5.4 | | V |
| $R_{OUT}$ | Output resistance | $V_{CC}$ = V+ = V- = 0V, $V_{OUT}$ = ±2V | 300 | 10M | | Ω |
| $I_{SC}$ | Output short circuit current | | | ±35 | ±60 | mA |
| $I_L$ | Output leakage current | $V_{CC}$ = 0 to 5.5V, transmitter output = ±12V, transmitter disabled | | | ±25 | µA |
| $V_{TO}$ | Transmitter output voltage | T1IN = T2IN = GND, T3IN = $V_{CC}$<br>T3OUT loaded with 3kΩ to GND<br>T1OUT and T2OUT loaded with 2.5mA each | ±5 | | | V |

**Table 10. Receiver electrical characteristics**
($C_1$ - $C_4$ = 0.1 µF, $V_{CC}$ = 3 V to 5.5 V, $T_A$ = -40 to 85 °C, unless otherwise specified.

| Symbol | Parameter | Test conditions | Min. | Typ. | Max. | Unit |
|---|---|---|---|---|---|---|
| $V_{RIN}$ | Receiver input voltage operating range | | -25 | | 25 | V |
| $V_{RIL}$ | RS-232 Input threshold low | $T_A$ = 25°C, $V_{CC}$ = 3.3V<br>$T_A$ = 25°C, $V_{CC}$ = 5.0V | 0.6<br>0.8 | 1.2<br>1.5 | | V |
| $V_{RIH}$ | RS-232 Input threshold high | $T_A$ = 25°C, $V_{CC}$ = 3.3V<br>$T_A$ = 25°C, $V_{CC}$ = 5.0V | | 1.5<br>1.8 | 2.4<br>2.4 | V |
| $V_{RIHYS}$ | Input hysteresis | | | 0.3 | | V |
| $R_{RIN}$ | Input resistance | $T_A$ = 25°C | 3 | 5 | 7 | kΩ |

**Table 11. Timing characteristics**
($C_1$ - $C_4$ = 0.1 µF, $V_{CC}$ = 3 V to 5.5 V, $T_A$ = -40 to 85 °C, unless otherwise specified.

| Symbol | Parameter | Test Conditions | Min. | Typ. | Max. | Unit |
|---|---|---|---|---|---|---|
| $D_R$ | Maximum data rate | $R_L$ = 3kΩ, $C_L$= 1000pF<br>one transmitter switching | 250 | | | kbps |
| $t_{PHL}$<br>$t_{PLH}$ | Receiver propagation delay | $R_{IN}$ to $R_{OUT}$, $C_L$ = 150pF | | 0.15 | | µs |
| $t_{T_SKEW}$ | Transmitter skew | | | 100 | | ns |
| $t_{R_SKEW}$ | Receiver skew | | | 300 | | ns |
| $S_{RT}$ | Transition slew rate | $T_A$ = 25°C, $R_L$ = 3k to 7kΩ, $V_{CC}$ = 3.3V<br>measured from +3V to -3V or -3V to +3V<br>$C_L$ = 150pF to 1000pF<br>$C_L$ = 150pF to 2500pF | <br><br>6<br>4 | | <br><br>30<br>30 | <br><br>V/µs<br>V/µs |

# 4 Application

**Figure 2. Application circuits**

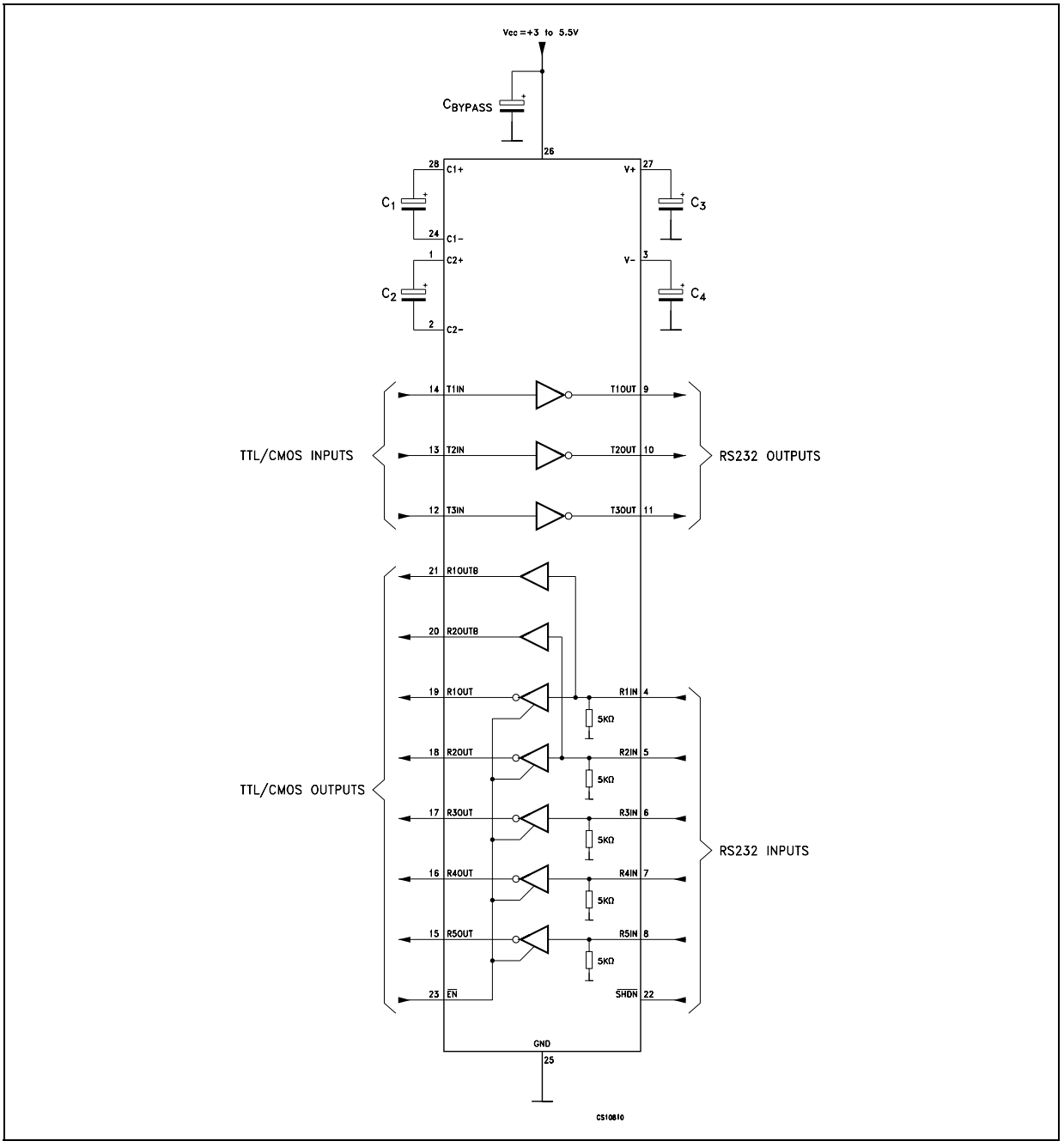


**Table 12. Required minimum capacitance value (µF)**

| $V_{CC}$ | C1 | C2 | C3 | C4 | Cbypass |
|---|---|---|---|---|---|
| 3.0 to 3.6 | 0.1 | 0.1 | 0.1 | 0.1 | 0.1 |
| 4.5 to 5.5 | 0.047 | 0.33 | 0.33 | 0.33 | 0.1 |
| 3.0 to 5.5 | 0.1 | 0.47 | 0.47 | 0.47 | 0.1 |

# 5 Package mechanical data

In order to meet environmental requirements, ST offers these devices in ECOPACK® packages. These packages have a lead-free second level interconnect. The category of second level interconnect is marked on the package and on the inner box label, in compliance with JEDEC Standard JESD97. The maximum ratings related to soldering conditions are also marked on the inner box label. ECOPACK is an ST trademark. ECOPACK specifications are available at: www.st.com

## SSOP28 mechanical data

| Dim. | mm. | | | inch. | | |
|---|---|---|---|---|---|---|
| | Min. | Typ. | Max. | Min. | Typ. | Max. |
| A | | | 2 | | | 0.079 |
| A1 | 0.050 | | | 0.002 | | |
| A2 | 1.65 | 1.75 | 1.85 | 0.065 | 0.069 | 0.073 |
| b | 0.22 | | 0.38 | 0.009 | | 0.015 |
| c | 0.09 | | 0.25 | 0.004 | | 0.010 |
| D | 9.9 | 10.2 | 10.5 | 0.390 | 0.402 | 0.413 |
| E | 7.4 | 7.8 | 8.2 | 0.291 | 0.307 | 0.323 |
| E1 | 5 | 5.3 | 5.6 | 0.197 | 0.209 | 0.220 |
| e | | 0.65 BSC | | | 0.0256 BSC | |
| K | 0° | | 10° | 0° | | 10° |
| L | 0.55 | 0.75 | 0.95 | 0.022 | 0.030 | 0.037 |

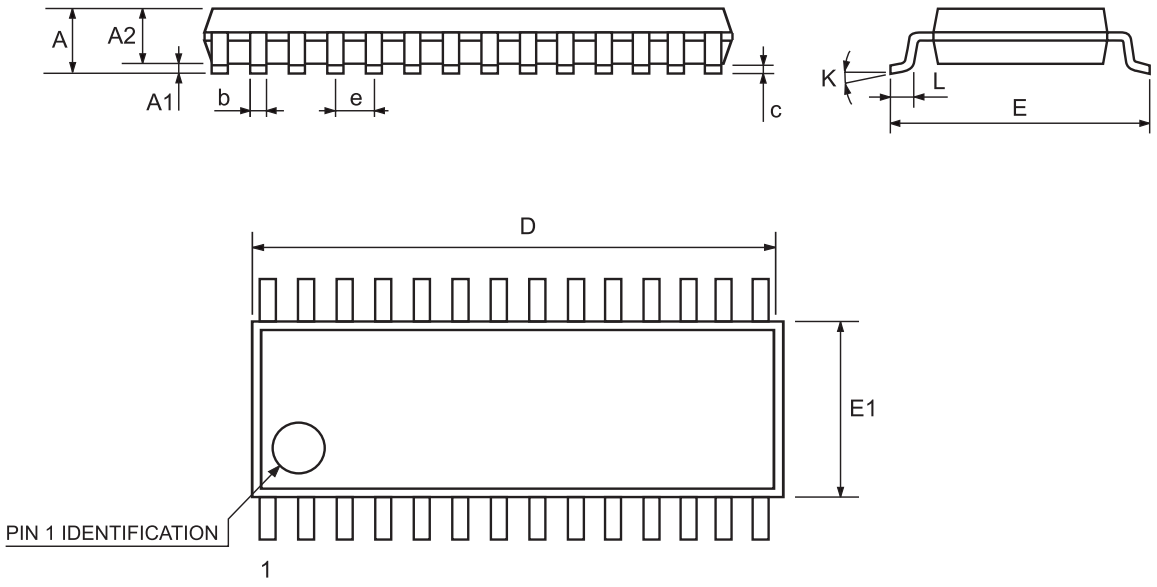

## TSSOP28 mechanical data

| Dim. | mm. | | | inch. | | |
|---|---|---|---|---|---|---|
| | Min. | Typ. | Max. | Min. | Typ. | Max. |
| A | | | 1.2 | | | 0.047 |
| A1 | 0.05 | | 0.15 | 0.002 | 0.004 | 0.006 |
| A2 | 0.8 | 1 | 1.05 | 0.031 | 0.039 | 0.041 |
| b | 0.19 | | 0.30 | 0.007 | | 0.012 |
| c | 0.09 | | 0.20 | 0.004 | | 0.0079 |
| D | 9.6 | 9.7 | 9.8 | 0.378 | 0.382 | 0.386 |
| E | 6.2 | 6.4 | 6.6 | 0.244 | 0.252 | 0.260 |
| E1 | 4.3 | 4.4 | 4.48 | 0.169 | 0.173 | 0.176 |
| e | | 0.65 BSC | | | 0.0256 BSC | |
| K | 0° | | 8° | 0° | | 8° |
| L | 0.45 | 0.60 | 0.75 | 0.018 | 0.024 | 0.030 |

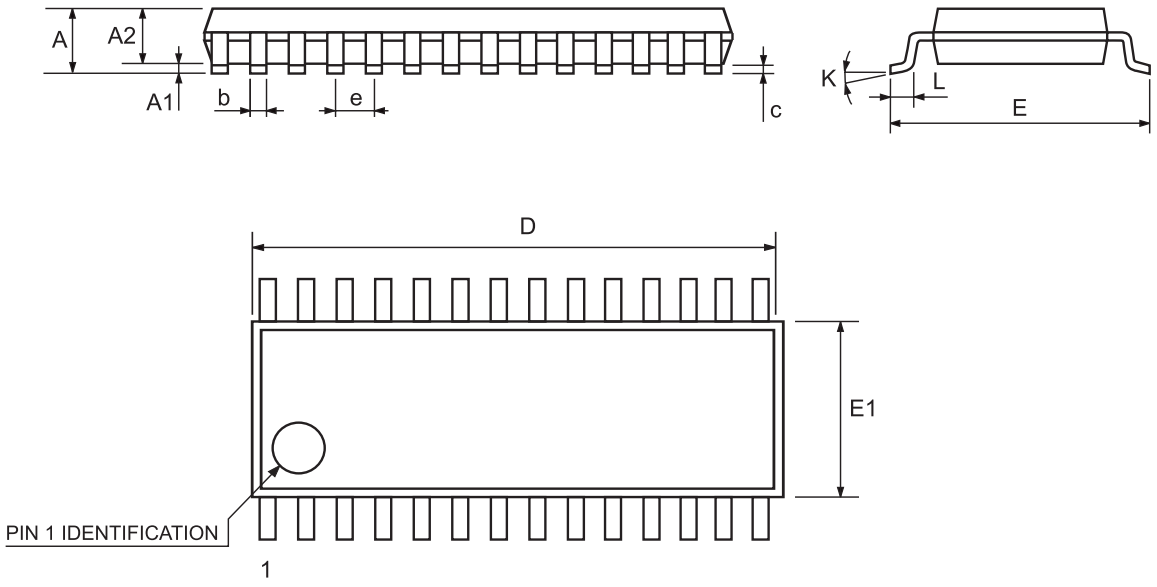


0128292B

## Tape & reel SSOP28 mechanical data

| Dim. | mm. | | | inch. | | |
|---|---|---|---|---|---|---|
| | Min. | Typ. | Max. | Min. | Typ. | Max. |
| A | | | 330 | | | 12.992 |
| C | 12.8 | | 13.2 | 0.504 | | 0.519 |
| D | 20.2 | | | 0.795 | | |
| N | 60 | | | 2.362 | | |
| T | | | 22.4 | | | 0.882 |
| Ao | 8.4 | | 8.6 | 0.331 | | 0.339 |
| Bo | 10.7 | | 10.9 | 0.421 | | 0.429 |
| Ko | 2.9 | | 3.1 | 0.114 | | 0.122 |
| Po | 3.9 | | 4.1 | 0.153 | | 0.161 |
| P | 11.9 | | 12.1 | 0.468 | | 0.476 |

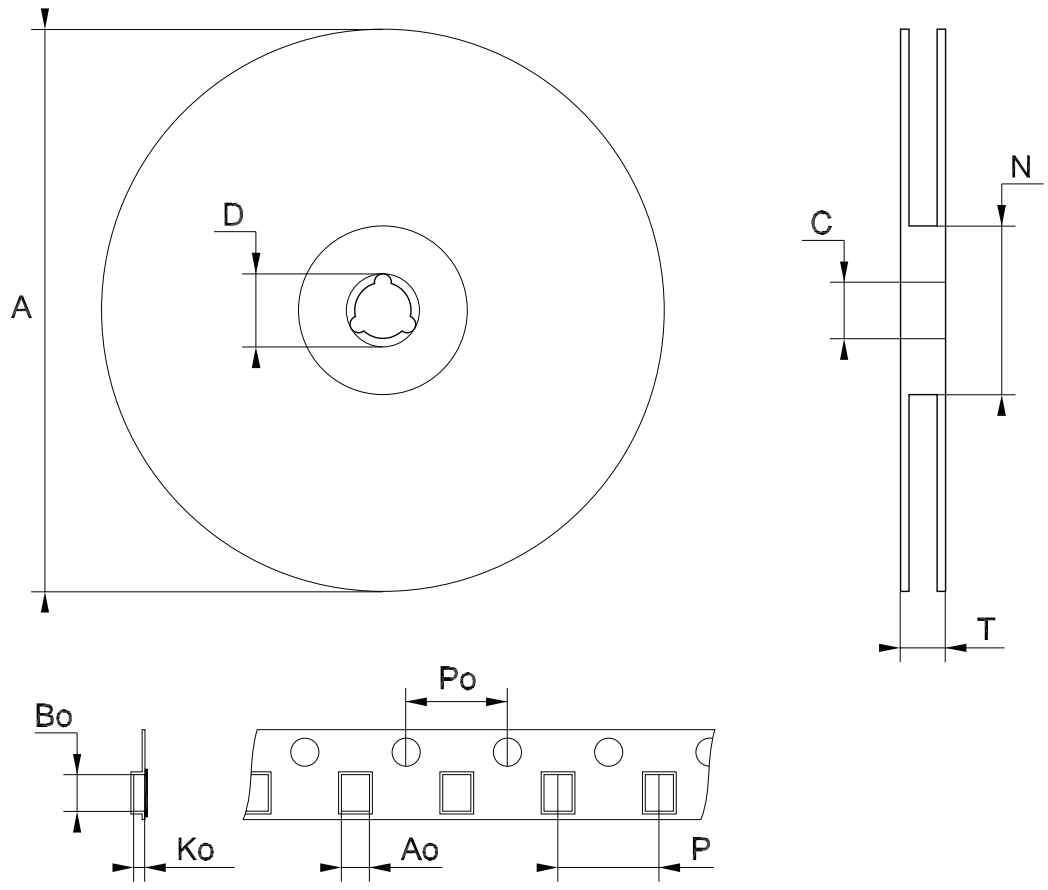


Note: Drawing not in scale

## Tape & reel TSSOP28 mechanical data

| Dim. | mm. | | | inch. | | |
|---|---|---|---|---|---|---|
| | Min. | Typ. | Max. | Min. | Typ. | Max. |
| A | | | 330 | | | 12.992 |
| C | 12.8 | | 13.2 | 0.504 | | 0.519 |
| D | 20.2 | | | 0.795 | | |
| N | 60 | | | 2.362 | | |
| T | | | 22.4 | | | 0.882 |
| Ao | 6.8 | | 7 | 0.268 | | 0.276 |
| Bo | 10.1 | | 10.3 | 0.398 | | 0.406 |
| Ko | 1.7 | | 1.9 | 0.067 | | 0.075 |
| Po | 3.9 | | 4.1 | 0.153 | | 0.161 |
| P | 11.9 | | 12.1 | 0.468 | | 0.476 |

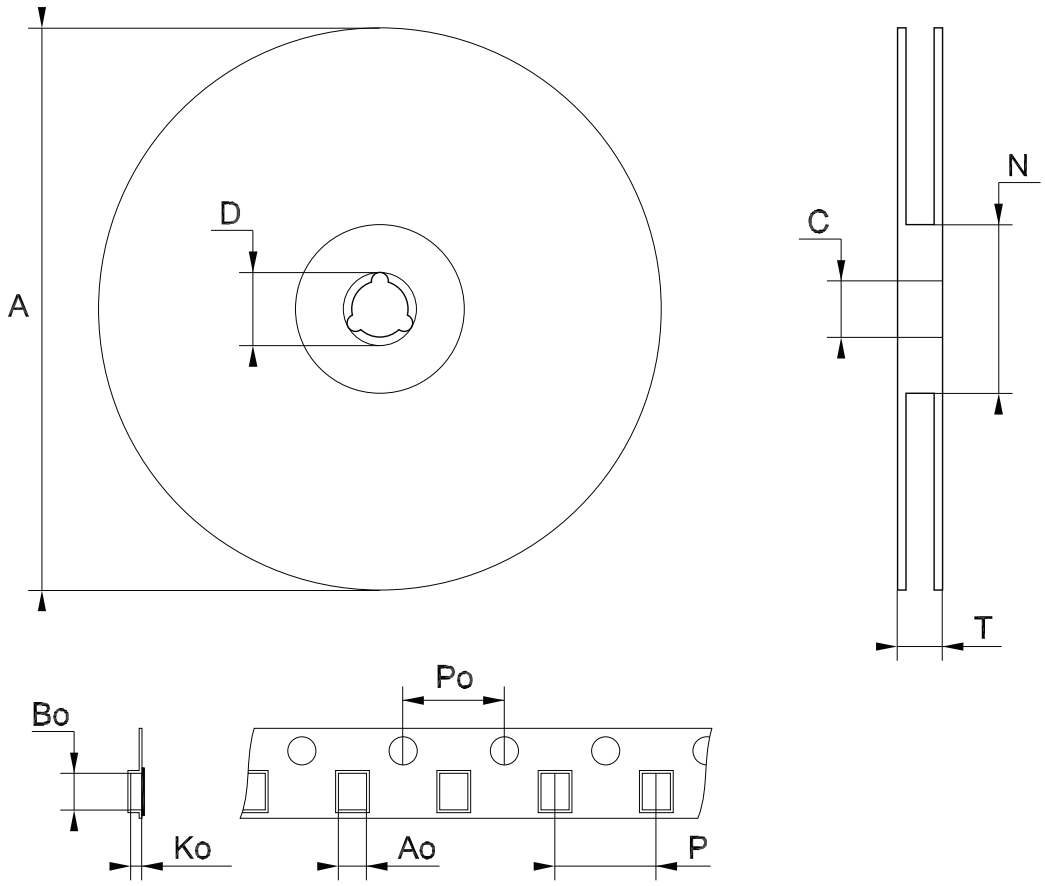


Note: Drawing not in scale

# 6 Revision history

**Table 13. Document revision history**

| Date | Revision | Changes |
|---|---|---|
| 21-Jun-2004 | 2 | The $I_L$ (Output Leakage Current) mA ==> µA in table 8. |
| 03-Apr-2006 | 3 | Order code updated. |
| 13-Nov-2007 | 4 | Added *Table 1.* |

**Please Read Carefully:**

Information in this document is provided solely in connection with ST products. STMicroelectronics NV and its subsidiaries (“ST”) reserve the right to make changes, corrections, modifications or improvements, to this document, and the products and services described herein at any time, without notice.

All ST products are sold pursuant to ST’s terms and conditions of sale.

Purchasers are solely responsible for the choice, selection and use of the ST products and services described herein, and ST assumes no liability whatsoever relating to the choice, selection or use of the ST products and services described herein.

No license, express or implied, by estoppel or otherwise, to any intellectual property rights is granted under this document. If any part of this document refers to any third party products or services it shall not be deemed a license grant by ST for the use of such third party products or services, or any intellectual property contained therein or considered as a warranty covering the use in any manner whatsoever of such third party products or services or any intellectual property contained therein.

**UNLESS OTHERWISE SET FORTH IN ST’S TERMS AND CONDITIONS OF SALE ST DISCLAIMS ANY EXPRESS OR IMPLIED WARRANTY WITH RESPECT TO THE USE AND/OR SALE OF ST PRODUCTS INCLUDING WITHOUT LIMITATION IMPLIED WARRANTIES OF MERCHANTABILITY, FITNESS FOR A PARTICULAR PURPOSE (AND THEIR EQUIVALENTS UNDER THE LAWS OF ANY JURISDICTION), OR INFRINGEMENT OF ANY PATENT, COPYRIGHT OR OTHER INTELLECTUAL PROPERTY RIGHT.**

**UNLESS EXPRESSLY APPROVED IN WRITING BY AN AUTHORIZED ST REPRESENTATIVE, ST PRODUCTS ARE NOT RECOMMENDED, AUTHORIZED OR WARRANTED FOR USE IN MILITARY, AIR CRAFT, SPACE, LIFE SAVING, OR LIFE SUSTAINING APPLICATIONS, NOR IN PRODUCTS OR SYSTEMS WHERE FAILURE OR MALFUNCTION MAY RESULT IN PERSONAL INJURY, DEATH, OR SEVERE PROPERTY OR ENVIRONMENTAL DAMAGE. ST PRODUCTS WHICH ARE NOT SPECIFIED AS "AUTOMOTIVE GRADE" MAY ONLY BE USED IN AUTOMOTIVE APPLICATIONS AT USER’S OWN RISK.**

Resale of ST products with provisions different from the statements and/or technical features set forth in this document shall immediately void any warranty granted by ST for the ST product or service described herein and shall not create or extend in any manner whatsoever, any liability of ST.

ST and the ST logo are trademarks or registered trademarks of ST in various countries.

Information in this document supersedes and replaces all information previously supplied.

The ST logo is a registered trademark of STMicroelectronics. All other names are the property of their respective owners.

© 2007 STMicroelectronics - All rights reserved

STMicroelectronics group of companies

Australia - Belgium - Brazil - Canada - China - Czech Republic - Finland - France - Germany - Hong Kong - India - Israel - Italy - Japan - Malaysia - Malta - Morocco - Singapore - Spain - Sweden - Switzerland - United Kingdom - United States of America

**www.st.com**