RER 101-36/14 NHH

DC centrifugal compact fan

single inlet

ebm-papst St. Georgen GmbH & Co. KG
Hermann-Papst-Straße 1
74673 St. Georgen
Phone: +49 7724 81-0
Fax: +49 7724 81-1309
www.ebmpapst.com
info2@de.ebmpapst.com

Nominal data

Type	RER 101-36/14 NHH	
Nominal voltage	[VDC]	24
Speed	[min^{-1}]	5900
Power input	[W]	20
Min. ambient temperature	[°C]	-20
Max. ambient temperature	[°C]	70
Air flow	[m^3/h]	190
Sound power level	[B]	7.2

ml = max. load · me = max. efficiency · rfa = running at free air · cs = customer specs · cu = customer unit
Subject to alterations

DC centrifugal compact fan

single inlet

Technical features

Dimensions	101 Ø x 52 mm
General description	Optional Vario-Pro: Highly flexible software configuration for the fan ensures an easily customizable solution to meet the individual requirements of your application. Electronic commutation completely integrated.
Connection line	Single strands AWG 22, TR 64, bared and tin-plated.
Direction of protection	Right, looking at rotor
Direction of air flow	Axial air intake, centrifugal air exhaust out of the outlet.
Bearing	Ball bearings
Lifetime L10 at 40 °C	60000 h
Lifetime L10 at maximum temperature	30000 h
Mass	0.305 kg
Housing material	Scroll housing of fiberglass-reinforced plastic.
Material of impeller	Fiberglass-reinforced plastic
Motor protection	Protected against reverse polarity and locking.
Option	Alarm signal

ebm-papst St. Georgen GmbH & Co. KG · Hermann-Papst-Straße 1 · 74673 St. Georgen · Phone: +49 7724 81-0 · Fax: +49 7724 81-1309 · www.ebmpapst.com · info2@de.ebmpapst.com

DC centrifugal compact fan

single inlet

Product drawing

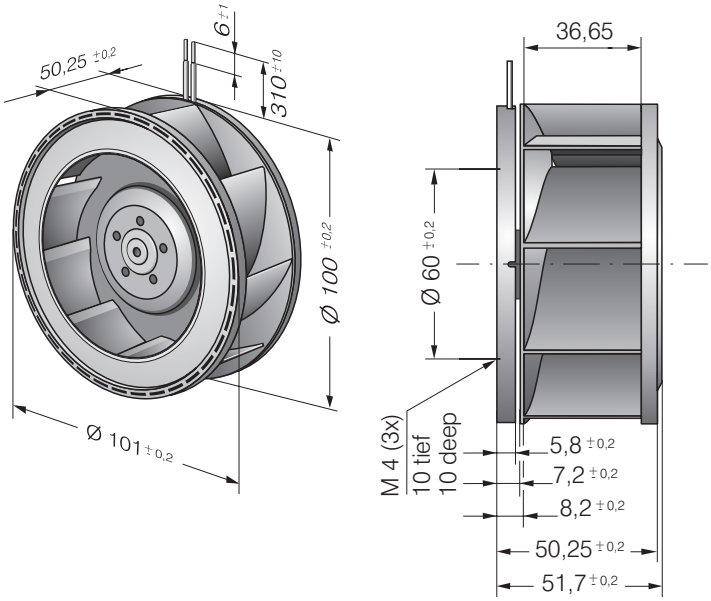

ebm-papst St. Georgen GmbH & Co. KG · Hermann-Papst-Straße 1 · 74673 St. Georgen · Phone: +49 7724 81-0 · Fax: +49 7724 81-1309 · www.ebmpapst.com · info2@de.ebmpapst.com

DC centrifugal compact fan

single inlet

Charts: Air flow

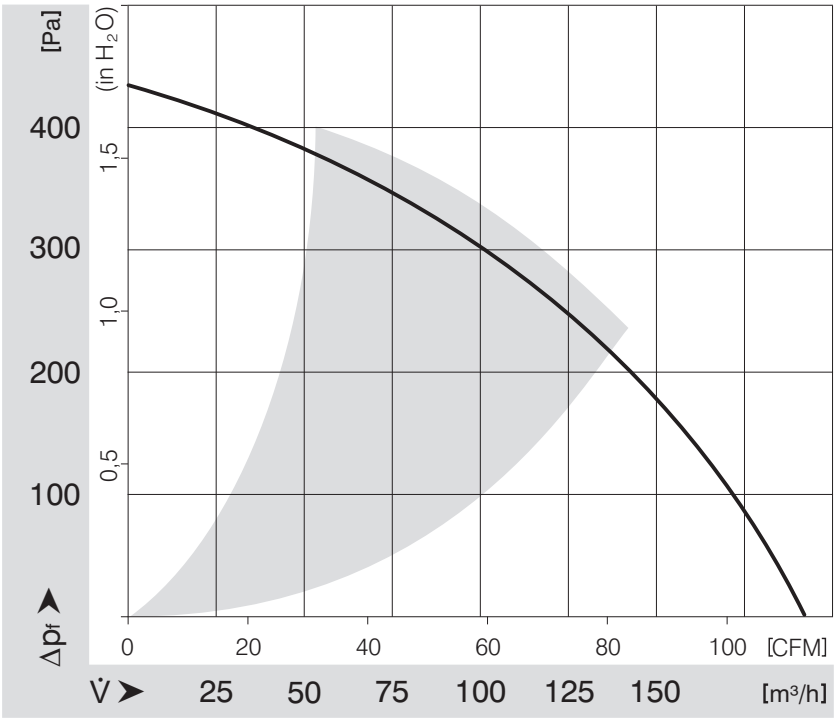

ebm-papst St. Georgen GmbH & Co. KG · Hermann-Papst-Straße 1 · 74673 St. Georgen · Phone: +49 7724 81-0 · Fax: +49 7724 81-1309 · www.ebmpapst.com · info2@de.ebmpapst.com